# Technical Manual

# SCG-9
# STEREO GENERATOR

Revision
November, 1989

**7A0600 REV B**



Moseley

Moseley
Associates
Incorporated

111 Castilian Drive
Santa Barbara, CA
93117-3093

a
Flow General
Company

Phone 805 968 9621
Telex 658448
FAX 805 685 9638

SCG-9 STEREO GENERATOR

FINAL CHECKOUT SHEET

Date 8-26-92

Tester

F.O.# 28214

Station Call CANCOMM

Serial No. 60923

NOTE: All performance data measurements referenced to 3.5 volts, p-p output for 100% Modulation.

Pilot Frequency 19.000 KHz

Pilot Injection 9%

Signal-to-Noise Ratio

Demodulated Left -76 db

Demodulated Right -76 db

Input Level for 100% Mod. @ 100 Hz +10 dbm

38 kHz Carrier Suppression

-72 db with no mod.

-68 db with 100%, 10 kHz

Distortion @ 400 Hz

.12% Mono Left

.16% Stereo L, .19% Stereo R

| Hz | Separation | | Cross Talk | | L/Mono Freq. Resp. |
|---|---|---|---|---|---|
| | L into R | R into L | L+R to L-R | L-R to L+R | |
| 50 | 62 | 68 | 60 | 60 | 50-1 |
| 400 | 62 | 68 | 60 | 60 | Ø |
| 1000 | 62 | 66 | 60 | 60 | Ø |
| 5000 | 63 | 65 | 54 | 53 | +0.2 |
| 10000 | 65 | 62 | 52 | 52 | +0.3 |
| 15000 | 58 | 60 | 50 | 50 | Ø |

COMMENTS:

5/75 Moseley Associates, Inc.

# WARRANTY

All equipment designed and manufactured by Moseley Associates, Inc. is warranted against defects in workmanship and material that develop under normal use within a period of (2) years from the date of original shipment, and is also warranted to meet any specifications represented in writing by Moseley Associates, Inc., so long as the purchaser is not in default under his contract of purchase and subject to the following additional conditions and limitations:

1. The sole responsibility of Moseley Associates, Inc. for any equipment not conforming to this Warranty shall be, at its option:

   A. to repair or replace such equipment or otherwise cause it to meet the represented specifications either at the purchaser's installation or upon the return thereof f.o.b. Santa Barbara, California, as directed by Moseley Associates, Inc.; or

   B. to accept the return thereof f.o.b. Santa Barbara, California, credit the purchaser's account for the unpaid portion, if any, of the purchase price, and refund to the purchaser, without interest, any portion of the purchase price theretofore paid; or

   C. to demonstrate that the equipment has no defect in workmanship or material and that it meets the represented specification, in which event all expenses reasonably incurred by Moseley Associates, Inc., in so demonstrating, including but not limited to costs of travel to and from the purchaser's installation, and subsistence, shall be paid by purchaser to Moseley Associates, Inc.

2. In case of any equipment thought to be defective, the purchaser shall promptly notify Moseley Associates, Inc., in writing, giving full particulars as to the defects. Upon receipt of such notice, Moseley Associates, Inc. will give instructions respecting the shipment of the equipment, or such other manner as it elects to service this Warranty as above provided.

3. This Warranty extends only to the original purchaser and is not assignable or transferable, does not extend to any shipment which has been subjected to abuse, misuse, physical damage, alteration, operation under improper conditions or improper installation, use or maintenance, and does not extend to equipment or parts not manufactured by Moseley Associates, Inc. and such equipment and parts are subject to only adjustments as are available from the manufacturer thereof.

4. NO OTHER WARRANTIES, EXPRESS OR IMPLIED, SHALL BE APPLICABLE TO ANY EQUIPMENT SOLD BY MOSELEY ASSOCIATES, INC. AND NO REPRESENTATIVE OR OTHER PERSON IS AUTHORIZED BY MOSELEY ASSOCIATES, INC. TO ASSUME FOR IT ANY LIABILITY OR OBLIGATION WITH RESPECT TO THE CONDITION OR PERFORMANCE OF ANY EQUIPMENT SOLD BY IT, EXCEPT AS PROVIDED IN THIS WARRANTY. THIS WARRANTY PROVIDES FOR THE SOLE RIGHT AND REMEDY OF THE PURCHASER AND MOSELEY ASSOCIATES, INC. SHALL IN NO EVENT HAVE ANY LIABILITY FOR CONSEQUENTIAL DAMAGES OR FOR LOSS, DAMAGE OR EXPENSE DIRECTLY OR INDIRECTLY ARISING FROM THE USE OF EQUIPMENT PURCHASED FROM MOSELEY ASSOCIATES INC.

10/87
Printed in U.S.A.

MOSELEY ASSOCIATES, INC.

SCG-9A

TABLE OF CONTENTS

# INSTRUCTION MANUAL

## MODEL SCG-9

## STEREO GENERATOR

## 1. INTRODUCTION

The Moseley Associates, Inc. Model SCG-9 Stereo Generator was designed to provide the broadcaster with a means of generating a high-quality stereo signal. Intended primarily to drive the Model PCL-505/C Studio-Transmitter Link, it may also be used with most FM exciters using direct frequency modulation. Special effort was made in the design of the SCG-9 to provide a unit greatly exceeding the minimum stereophonic requirements in order to allow degradation in the performance of any following equipment.

The SCG-9 features built-in full-wave peak-reading metering of the composite output waveform, small size, rugged construction, thorough RF shielding and filtering, and simplified remote control. The 16 kHz audio lowpass filters are switch-defeatable, as is the trimmable pre-emphasis, if prior audio processing so dictates.

## II. SPECIFICATIONS

| | |
|---|---|
| Audio Input | 600 ohms, resistive, floating; +10 dBm, ±2 dB |
| Frequency Response | Within 1 dB of the chosen pre-emphasis curve, 30 Hz to 15 kHz |
| Pre-Emphasis | Switch-selectable 0, 25, 50, and 75 microseconds; trimmable |
| Audio Lowpass Filter | Fifth-order Cauer; greater than 40 dB attenuation at 19 kHz |
| Audio Channel Separation | Better than 40 dB, 45 dB typical, 30 Hz to 15 kHz |
| Crosstalk, Main and Subchannels (Linear) | Better than 43 dB, 50 dB typical, including built-in 16 kHz lowpass filters |
| Crosstalk, Main and Subchannels (Non-Linear) | Better than 46 dB |
| Subcarrier Suppression | 50 dB minimum, 55 dB typical, with or without modulation |
| Pilot Frequency Stability | Less than 1 Hz drift in 6 months; trimmable |
| Harmonic Distortion | Less than 0.4%, stereo or mono |
| Signal-to-Noise Ratio | Better than 68 dB |
| Output Level | 3.5 volts peak-to-peak nominal into 5,000 ohm minimum load with 1,000 pF maximum capacitance |
| Stereo/Mono Switching | Front-panel momentary-action spring-return switch or remote momentary contact closure to ground; modulation level is the same in stereo and mono modes |

| | |
|---|---|
| Power Requirements | 120/240 VAC, +10%, 50-60 Hz<br>10 watts |
| Operating Temperature Range | -20°C to +60°C (-4°F to +140°F) |
| Size | 1.75" H (4.5 cm) x 19" W (48.4 cm)<br>x 10" D (25.4 cm) |
| Domestic Shipping Weight | 10 pounds |

## III. UNPACKING

The SCG-9 should be carefully unpacked and inspected for any shipping damage. Keep all packing material until performance is confirmed. Should inspection reveal shipping damage, or should hidden damage be revealed, immediately file a claim with the carrier.

It is recommended that the top cover to be removed for a brief, superficial inspection.

NOTE: DO NOT MAKE ANY ADJUSTMENTS OF ANY KIND TO THE EQUIPMENT AT THIS TIME.

This inspection should ascertain that the various components are mechanically secure. After the inspection, replace the cover.

## IV. INSTALLATION

If possible, the SCG-9 should be mounted between waist and eye height. This will enable convenient reading of the output meter as well as convenient mode selection. The rack should be grounded.

Connect the outputs of the frequency-conscious audio limiters such as the Moseley Associates Model TFL-280 to the left and right program audio inputs on the rear of the SCG-9. It is recommended that a cable of the type having two conductors with a shielded outside jacket be used. The shield should be connected to the "G" terminals on the SCG-9.

If applicable, the remote control connections may also be made at this time. The same type of cable (two-conductor with shield) may be used. The remote control cable may be terminated with one or more pairs of push buttons, each of the single-pole single-throw normally-open type. A momentary closure to ground (the shield) from the "M" terminal will place the SCG-9 in the monaural mode. A momentary closure to ground from the "S" terminal will place the SCG-9 in the stereo mode.

In the monaural mode, only one audio channel is accepted. This has been factory wired to be the left channel, but may be converted in the field to be the right channel.

The normal audio input level will be +10 dBm. This is the level normally required for full output using a sinewave at low audio frequencies. Complex waves, such as speech and music, will indicate much lower on an ordinary effective or RMS meter such as the VU-type. Further, the level required for full modulation will decrease as the audio frequency is increased. This is due to the pre-emphasis circuitry in the stereo generator. The front-panel meter on the SCG-9 may be relied on to indicate the correct level, regardless of whether sinewave test signals or actual program material is used.

The excitation to the SCG-9 should be controlled by a limiter, preferably one of the frequency-conscious types such as the Moseley Associates, Inc. TFL-280. This limiter may be preceeded by an audio AGC system at the discretion of the individual station. The recommended method of adjustment of this chain of equipment is as follows:

1. Adjust the AGC unit input level controls until they are operating in the middle of their intended control range without any stereo interconnection. Either monaural program material or a test tone applied to both program channels may be used. After the input level controls have been adjusted, reapply the stereo interconnection.

2. Adjust the outputs of the AGC units to some standard level such as +10 dBm.

3. Adjust the limiter input controls until the limiters are operating with the desired degreee of limiting without the stereo interconnection. The limiting activity may change after the limiter input controls have been adjsuted, reapply the stereo interconnection.

4. Adjust one of the limiter output controls for a reading of "0" on the SCG-9 panel meter. Then adjust the other limiter output control for a null in the stereo monitor subchannel reading. In this manner both limiters are exciting their audio channels in an identical manner.

The output level is normally 3.5 volts peak-to-peak, regardless of whether stereo or mono signals are transmittes. The output will normally go to the wideband input on the PCL-505/C Transmitter or direct FM exciter. The length of the interconnecting cable should be such that its capacity is less than 1,000 pF.

With power and audio signals applied, the operation of the meter, mode switch, and mode indicators can be observed. In addition, the remote switching, if used, can be tested.

## V. PRINCIPLES OF OPERATION

Very simply stated, stereophonic transmission is the electronic switching at an ultrasonic (38 kHz) rate of the output, first to the left audio channel and then to the right. This takes place repetitively at a rate that is so fast it is inaudible; the person with a monaural receiver hears only the resultant blend between the two channels. The listener with a stereo receiver has the ability to decode the stereo signal so that he re-creates the original left and right channels. It has been determined in practice that this scheme is compatible with other services such as simultaneous background music transmission.

In addition to switching the output signal alternately between the left and right audio channels, a pilot tone signal is also transmitted to enable the receiver to synthesize a switching signal to decode or demodulate the stereo signal into its left and right audio components. To prevent interference to this pilot tone (at 19 kHz), the SCG-9 has built-in lowpass filters cutting off at 16 kHz so that program material above that frequency is sharply attenuated. In this manner, no particular signals will interfere with the pilot tone and the receiver can extract the 19 kHz signal with a minimum of interference. These filters also remove 30 kHz information peculiar to some quadraphonic disc recordings.

As in standard monaural transmission, pre-emphasis (treble boost) is employed in each input audio channel. After demodulation in the receiver, de-emphasis (treble cut) is employed to counter the transmitted signal with its pre-emphasis. The receiver de-emphasis cuts down the noise

on the signal, as well as the level of the pilot tone and other by-products icidental to the receiver's demodulation process.

The basic parts required for stereophonic signal generation are now seen to be these:

1. A pair of identical audio channels incorporating pre-emphasis.

2. A pair of 16 kHz lowpass filters, one in each audio channel.

3. An electronic switch that alternately keys first the left audio channel and then the right audio channel to the output circuitry.

4. A relay to connect either the signal from the output of the electronic switch or the signal from the output of one of the audio lowpass filters to the output circuitry.

## VI. CIRCUIT DESCRIPTION

The following description is with reference to the block diagram 92B1226 and the schematic 91D7092.

Discussing first the switching-signal generation process, observe the 3.04 MHz crystal-controlled oscillator using transistor Q4. This oscillator is followed by buffers Q5 and U13. The output of U13 is appled to dividers U14 and U15. One output from U15 is a 38 kHz square wave (at pin 8), used to drive the electronic switch U5. A second output from U15 is a 19 kHz square wave (at pin 11), used to drive a buffer (part of U13). The output of this buffer is applied to power amplifier Q7 and Q8. The output from this amplifier is applied to a tank circuit (L5 and C44) for harmonic removal and pilot phase adjustment.

The program audio inputs are applied to a pair of resistive input attenuators (pads) to assure a resistive load and allow sensitivity adjustment. The pad outputs are applied to transformers T102 and T103 for conversion to an unbalanced form. The transformer outputs are applied to operational amplifier (op amps) U1 and U2 for pre-emphasis. The left channel, using U1, has gain standardized (R6) and trimmable pre-emphasis (R12). The right channel, using U2, is adjustable to match both gain and phase of the two audio channels across the entire audio spectrum.

The pre-empahsis circuit outputs are applied to audio lowpass filters. These filters have a flat response to 16 kHz, assuring full modulation capability to that frequency. They have deep points of minimum transmission at 19 kHz and 30 kHz. The dip at 19 kHz assures that program material will not compete with the pilot in the stereo demodulator. The dip at 30 kHz removes ultrasonic material present in some discrete four-channel recordings. It also prevents upper-sideband stereo components from interfering with the SCA subcarrier at 67 kHz. The outputs of the lowpass filter are applied to buffer amplifier U3 and U4 for conversion to a low impedance to drive the electronic switch U5.

The switch has 38 kHz carrier applied to it from U15 and low-impedance audio from buffers U3 and U4. The switch output is applied to operational summer U6. This amplifier combines the switch output (via R41), minor-envelope (baseline) separation-correction signals (from R101 and R103 via R38 and R46), the pilot (from R88 and R47), and negative feedback from R49 via R48. The output of this amplifier is held precisely at ground potential via integrator U7. The amplifier output is filtered by the phase-linear lowpass filter to remove the switching-signal harmonics.

The output amplifier U9 receives either stereo excitation from the phase-linear lowpass filter or monaural excitation from one of the audio lowpass filters. The chosen signal (selected by K1) is applied to the output amplifier via phase-correction amplifier U8. Which audio channel is used for the monaural mode is optional and field-convertible by a strap change. The output amplifier has adjustable gain and delivers a nominal 3.5 volts peak-to-peak into a load not less than 5000 ohms with a shunt capacity not to exceed 1000 pF.

The output of the phase-correction stage is also applied to the meter amplifier. The first stage of this system is an amplifier using U10. The output of this stage is applied both to rectifier Q2 and inverter U11. The output of U11 is also applied to a rectifier, using Q3. The rectifiers are forward-biased and temperature compensated by the diode formed by Q1. The rectifiers peak-detect the modulating signal in a full-wave manner by charging capacitor C31. The voltage across this capacitor is applied to the DC amplifier using U12. This stage provides a low-impedance output to drive the meter movement and also provide adjustable meter damping.

Mode-selection relay K1 is driven by the stereo-mono latch circuit using transistors Q9 through Q12. The basic latch is formed by the circuitry around Q10 and Q11. Q9 and Q12 are power amplifiers to drive the relay

K1 and the LED mode indicators.

The front-panel mode-selection switch is a spring-return, center-off type. For remote control purposes, connections are brought out from this switch to the rear control terminals. Only a momentary closure to ground is required. The power supply for the SCG-9 is a simple electronically-regulated type. The power transformer primary is of a split configuration to allow 240 VAC operation as well as 120 VAC operation.

## VII. ADJUSTMENT

Should monitoring equipment indicate that there is a problem in the system, and further should this trouble be positively traced to the SCG-9, then re-asjustment may be in order. Controls should not be reset unless it is quite certain that a specific problem will be solved by a specific readjustment. Description of the various controls is given here to assist the competent operator to correct misadjustment.

The following controls are accessible from the front of the equipment. They are recessed to discourage frequent readjustment.

OUTPUT LEVEL (R104)---This control enables a small output level correction. The output level should be 3.5 volts peak-to-peak nominal and this should be achieved at an audio input level of +10 dBm at low audio frequencies.

CARRIER BALANCE (R102)---This control enables the electronic switch to operate in a balanced condition to minimize the amplitude of the 38 kHz carrier appearing in the output. Normal adjustment procedure is to remove modulation (the pilot may be left on) and adjust this control for a null when the stereo monitor is set to read the level of the 38 kHz carrier. When a high-frequency test tone (5 kHz or above) is reapplied, the 38 kHz carrier balance control may require slight readjustment.

SEPARATION/LEFT (R101)---This control enables minimizing the amount of left audio channel appearing in the right studio channel. Apply a test tone to the left channel only and observe the right channel using the stereo monitor. Adjust the control for a null in the right channel reading.

SEPARATION/RIGHT (R103)---This control is the right-channel counterpart of the above control. Apply a test tone to the right channel only and observe the left channel on the monitor. Adjust the control for a null in the left channel reading.

The following controls are located inside the equipment. They are of a secondary nature, allowing realistic manufacturing tolerances and operational flexibility. As with the front-panel controls, they should not be reset unless it is determined that readjustment is necessary.

METER ZERO (R79)---This control is the electrical zero adjustment for the meter movement. It should be adjusted only when the unit is delivering no output (not even pilot; go to the mono mode). Check the mechanical zero on the movement prior to readjusting this control. Remove audio excitation, confirm that operation is monaural, and adjust this control for no meter deflection as viewed from the front.

Adjust R45 for a minimum reading on the SCA monitor subcarrier level metering position. A third method of adjustment is to monitor the wideband modulation monitor signal when audio, pilot, and SCA signals are removed. Adjust R45 for a minimum reading.

VECTOR CROSSTALK CONTROLS (24, R31, R29, and C16)---These controls enable the gains of the audio channels to be matched at all frequencies. They are adjusted by applying the same test tone to both audio inputs of the SCG-9 directly. Remove all other earlier equipment, (limiters, AGC, etc.) from the system and apply the test tone directly to the SCG-9. Adjust the controls for a minimum L-R (subchannel) signal when in the stereo mode, using test tones (of the frequencies indicated on the schematic) applied simultaneously to both audio channel inputs.

LOW-FREQUENCY PHASING (R54)---This control allows stereophonic separation to be matrixed at the lower audio frequencies. It is set by applying a 50 Hz test tone to one audio channel and adjusting for the best audio channel separation.

PRE-EMPHASIS SWITCHES (SW1 through SW4)---These switches enable various degrees of pre-emphasis to be chosen. For flat response (no pre-emphasis), all four switches are in the "0" position (to the right). For 75 microsecond operation SW1 and SW3 are in the "25" position, while SW2 and SW4 are in the "50" position. For 50 microsecond operation, SW2 and SW4 are in the "50" position, while SW1 and SW3 are in the "0" position. Be sure that both audio channels have the same degree of pre-emphasis.

LOWPASS FILTER IN/OUT SWITCHES (SW5 and SW6)---These switches enable the audio lowpass filters to be placed in the circuit or to be bypassed. These switched must be placed in their "in" position if the audio has been processed by a clipping-type limiter, in order to prevent aliasing and resultant incorrect demodulation in the receiver or monitor. They should be in the "in" position if there is a significant amount of high-frequency material (above 15 kHz) in the program material. They should be operated to the "out" position if the audio has been processed by a low-distortion limiter such as the Moseley Associates Model TFL-280. Such a limiter not only offers clean and non-fatiguing audio control but also allows a heavier degree of modulation than a clipping-type limiter because of the freedom from the lowpass filter requirement. Always be sure both switches are in the same position.

The audio lowpass filters provide positive protection to the pilot, to the stereo subchannel and to the SCA subchannel. Defeating the filters and applying audio of the SCG-9 which has been routinely clipped will probably cause problems during modulation. This will typically take the form of transient left/right audio channel swapping (due to interference with the pilot tone); or a lisping/spitting sound (due to aliasing).

METER CALIBRATION (R62)---This control determines the meter deflection for a given amplitude applied to the SCG-9 output amplifier. It is adjusted for a "0 dB" reading when the output amplifier is driven with a 0.7 volt peak-to-peak signal at U9, Pin 3 as observed with an oscilloscope. Notice that the meter deflection will not change when the output level control is varied.

METER DAMPING (R75)---This control determines the damping of the meter movement. It is adjusted to provide a 0.5 dB overshoot on a rapidly-applied audio tone. If the tone is switched on, the internal pre-emphasis will cause a severe overshoot; apply the tone suddenly by using an external potentiometer or the output level control on the audio generator.

PILOT FREQUENCY (C38)---This control determines the frequency of the 3.04 MHz crystal oscillator. It is adjusted for a correct 19 kHz pilot tone frequency, preferably using the stereo monitor. For precision use TP10 (Green) and a frequency counter. Adjust C38 for a reading of 3.04 MHz.

PILOT AMPLITUDE PRESET (R88)---This control allows the pilot level to be set at 9% of the total output. It is suggested that the minimum pilot amplitude be held at 8.5% and the maximum should be 9.5%.

PILOT PHASING (L5)---This control (an adjustable inductor) allows the phase of the pilot tone to be advanced or retarded from its ideal time relationship with the 38 kHz switching panel.

STEREO GAIN (R49)---This control enables the output level of the stereo generator to be identical in the stereo and mono modes. Apply a tone to one audio channel (the one used for monaural transmission) and not the output level. Now switch to the stereo mode and adjust this control for the same output level.

76 kHz BALANCE (R45)---This control enables those residual components in the 76 kHz region to be nulled. It is best adjusted using a tunable voltmeter. As an alternative, it may be adjusted using an SCA monitor. Excite the stereo generator with a single 9 kHz test tone and adjust R45 for a minimum reading on the SCA monitor subcarrier-level metering position. A third method of adjustment is to monitor the wideband modulation monitor signal when audio, pilot and SCA signals are removed, Adjust R45 for a minimum reading.

The audio lowpass filters provide positive protection to the pilot, to the stereo subchannel and to the SCA subchannel. Defeating the filters and applying audio of the SCG-9 which has been routinely clipped will probably cause problems during modulation. This will typically take the form of transient left/right audio channel swapping (due to unwanted components causing interference with the stereophonic subchannel, a process called aliasing); or crosstalk into the SCA subchannel (due to the upper sideband of the stereophonic subchannel being ill-defined). These problems will not be evident if clipping is used solely as a protective measure, following treble audio frequency AGC activity. If clipping is used, as the primary method of high-frequency amplitude control and if the audio lowpass filters have been defeated, than all of the above-mentioned problems will probably surface unless the program material has insignificant amounts of high-frequency energy measured on a pre-emphasized and peak-reading basis.

## VIII. OPERATIONAL SUGGESTIONS

It may be of interest, in automated operations, to consider the use of auxiliary trip tones to switch automatically from stereo to monaural transmissions. Selected items during the day, for example station identification, could be transmitted in stereo but using one channel only (the left channel). This will allow the use of your station for accurate receiver alignment.

When stereo signals are being transmitted, the entire frequency spectrum from 50 Hz (or below) through about 53 kHz is occupied. The only remaining spectrum for SCA operation is the band between 53 kHz and 75 kHz. An industry standard for SCA operation is at a center frequency of 67 kHz. This frequency, when modulated either excessively or with program signals above about 5 kHz, can still interfere with stereo programming. Hence, when SCA programming is attempted at 67 kHz, it is highly advisable to limit both the instantaneous excursion of the SCA subcarrier and to restrict the bandwidth of the program material. These two things, when done simultaneously, will normally prevent sideband interference to the stereo signal. Refer to the FCC Rules, Section 73.319, for technical standards concerning SCA operation.

Another form of interference between the SCA and the stereo signals which may occur in some systems is the splatter from the stereo signal into the SCA region. The design philosphy of the SCG-9 Stereo Generator is to use audio filters in each channel, cutting off the response at 16 kHz. This positively prevents sideband components in the stereo subchannel from being generated above 55 kHz. This completely cleans the spectrum above 55 kHz and the SCA receiver then has no interference with which to contend.

On occasion, there may be noted a whistle in the stereo receiver when SCA signals are being transmitted on 67 kHz along with the stereophonic programming. This whistle, at a frequency of 10 kHz, is generated in the stereo demodulator as a by-product of the demodulation process. The 19 kHz pilot tone itself is "demodulated", and a large third-harmonic component is developed. This 57 kHz signal, which is not transmitted but which is generated in the demodulator, is then mixed in the demodulator circuit in a nonlinear manner with the 67 kHz SCA signal. The resultant 10 kHz intermodulation component is passed by the audio system and is heard as an annoying whistle. Depending on the individual receiver or monitor, it is generally about 55 to 65 dB below full modulation. The important thing to remember is that this whistle is probably developed in the stereo demodulator and is not being transmitted. This can be confirmed by noting that the modulation monitor baseband (wideband) output, as measured by tuneable voltmeter, does not contain the 10 kHz signal.

Should there be an apparent problem in properly demodulating the output of the SCG-9, bear in mind that the fault may not necessarily lie in the generator. Stereo monitors essentially reverse the switching process used in the SCG-9 to generate the stereo signal. They process the composite signal back into the original left and right audio channels. Most of the same tech-

niques used in the SCG-9 are common in stereo monitors, and so it can be seen that the monitor can be easily adjusted to compensate for an incorrect condition in the SCG-9. Likewise, if the monitor is out of adjustment, then the SCG-9 will require compensating (and incorrect) adjustments made it to give correct readings. Generally speaking, such adjustments can be confirmed as being erroneous by carefully running through the entire setup procedure for the stereo generator. Some monitors can be checked out in the field without external equipment while some require more test equipment. The most valuable single piece of equipment the broadcaster can use to visually check a suspected condition is an industrial-grade wideband, DC-coupled oscilloscope. It is beyond the scope of this manual to give complete procedures in analyzing stereophonic waveforms, but an oscilloscope can give results whose accuracy will compete with the finest monitors.

## IX. FIELD MODIFICATIONS

CHANGING THE MONAURAL SOURCE---The SCG-9 is normally wired to accept the left channel in the monaural mode. To accept the right channel, move the strap which terminates near U3 to the corresponding terminal near U4.

POWER-UP TO MONAURAL---As shipped, the SCG-9 will normally start up in a stereo mode following a power interruption. Should it be desired to start up in a monaural mode, remove timing capacitor C46 and reinstall it in the holes next to R96. This will force the SCG-9 to go to the monaural mode following a power interruption, and does not affect the stereo-mono mode switching in any way.

REWIRING POWER TRANSFORMER TO ACCOMODATE 240 VAC---The SCG-9 is normally wired for a primary voltage of 120 VAC. The split-primary power transformer can have its windings in series for 240 VAC as shown on the schematic. The transformer has been designed to accomodate 50 Hz. When the transformer is reconnected for 240 VAC operation, the fuse should be changed to one with a 1/8 ampere rating.

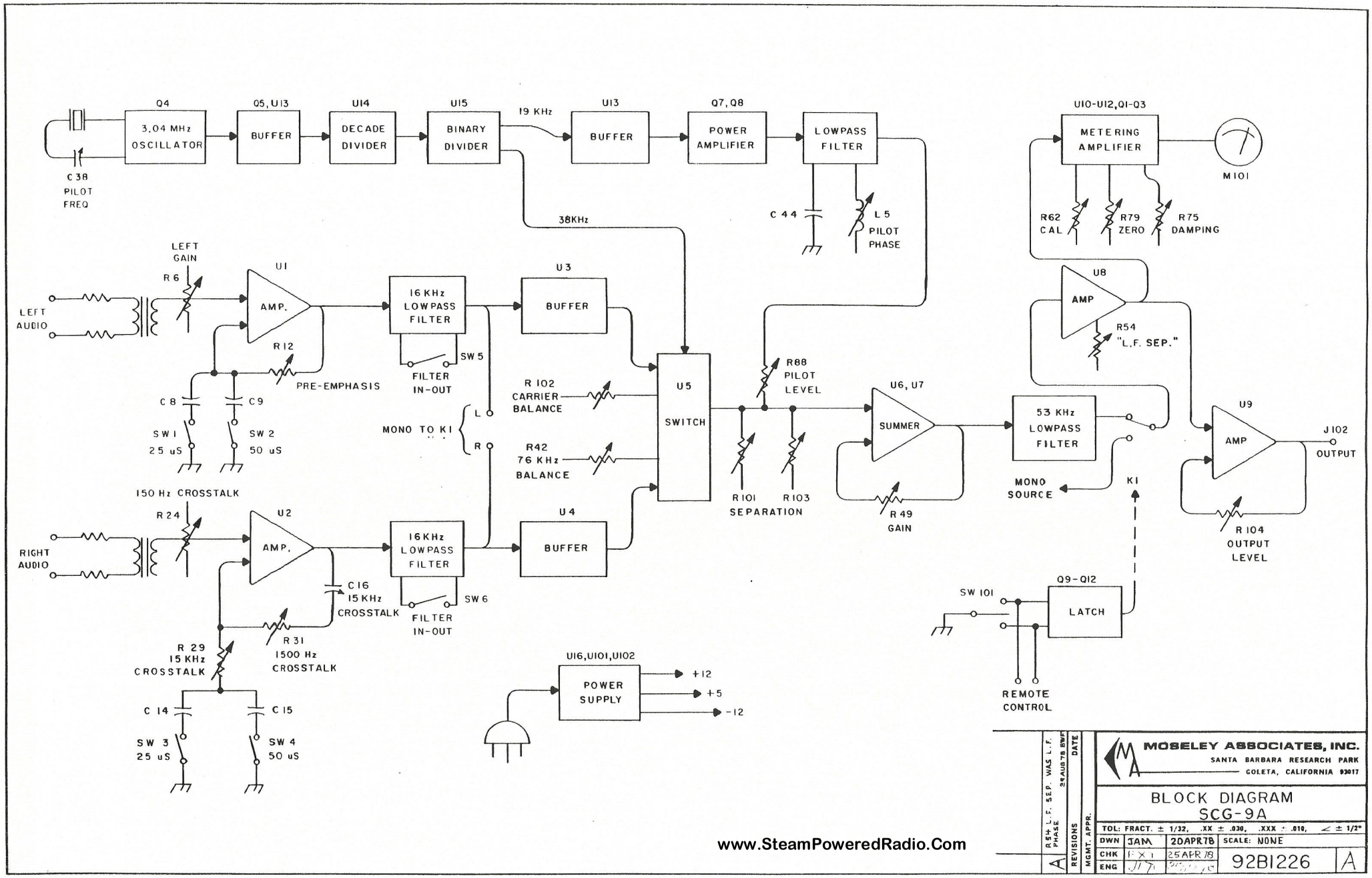




| REVISIONS | | DATE |
|---|---|---|
| A | R54 L.F. SEP. WAS L.F. PHASE | 24AUG78 BWF |

MGMT. APPR.

**MOSELEY ASSOCIATES, INC.**
SANTA BARBARA RESEARCH PARK
GOLETA, CALIFORNIA 93017

BLOCK DIAGRAM
SCG-9A

TOL: FRACT. ± 1/32, .XX ± .030, .XXX ± .010, ∠ ± 1/2°

| | | | |
|---|---|---|---|
| DWN | JAM | 20APR78 | SCALE: NONE |
| CHK | [illegible] | 25APR78 | 92B1226 A |
| ENG | [illegible] | [illegible] | |

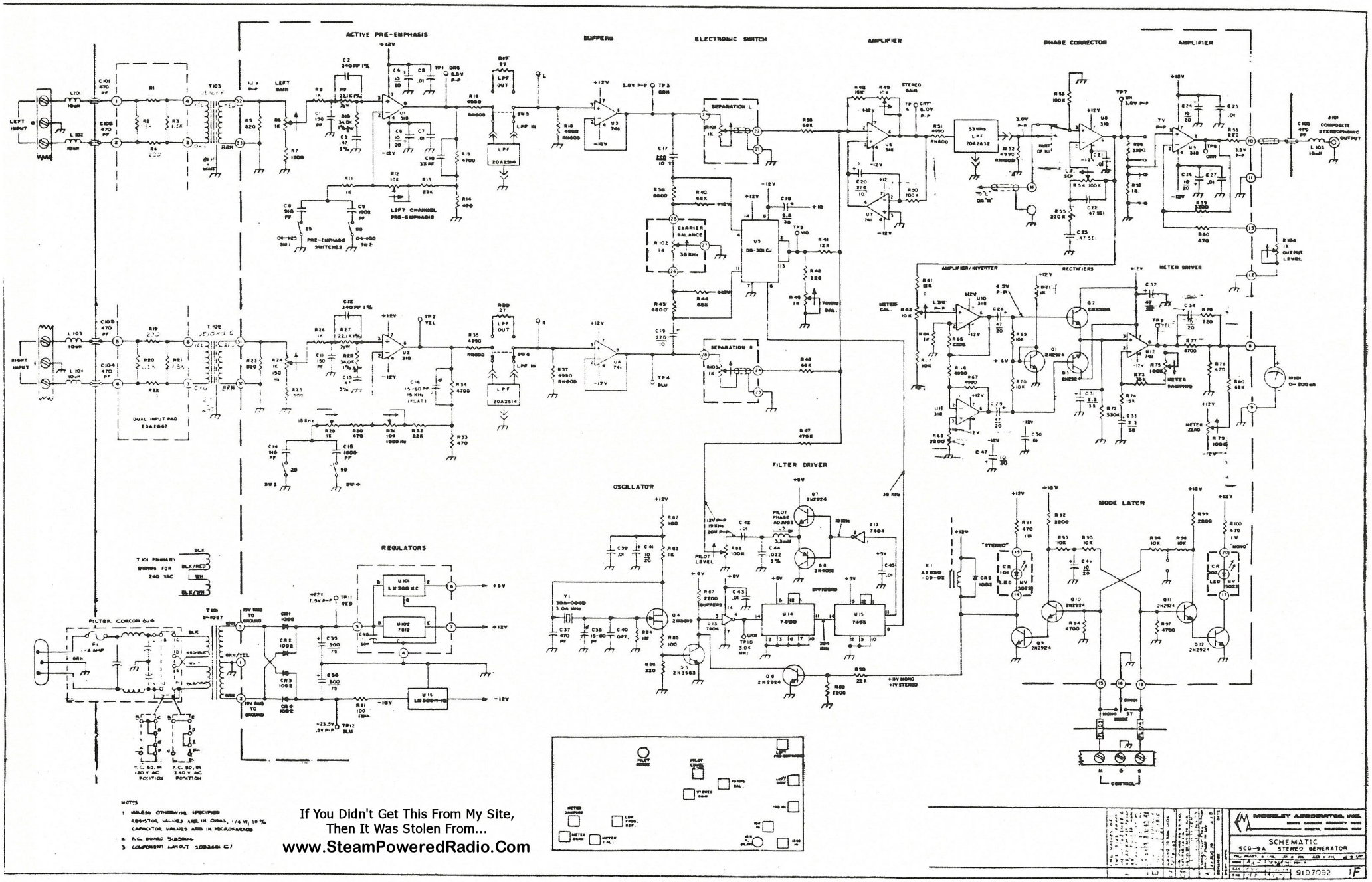




91D7092

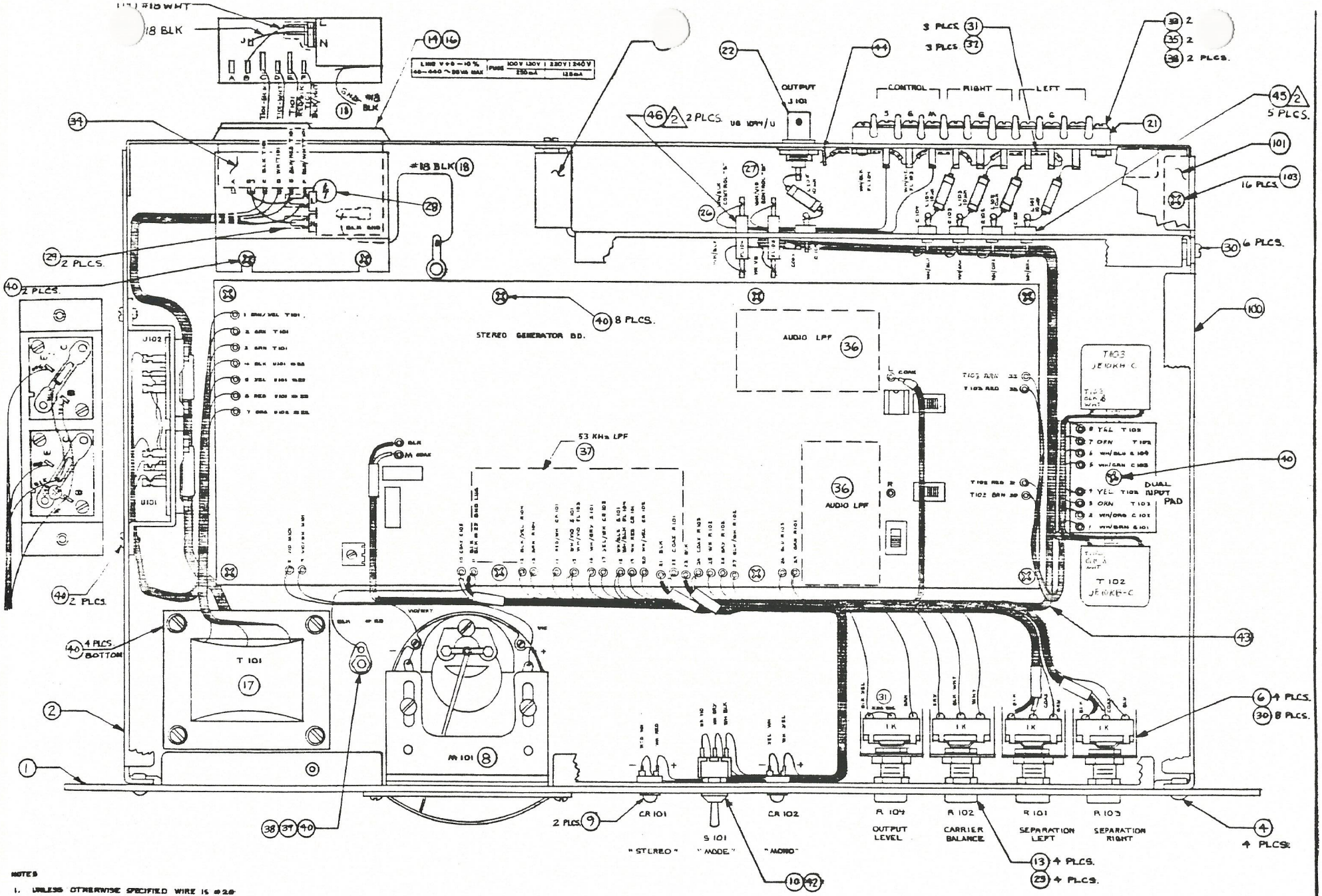


NOTES

1. UNLESS OTHERWISE SPECIFIED WIRE IS #22
2. SOLDER FEED THRUS TO PLATE USING OVEN OR HEAT GUN ONLY
3. COAX IS RG174/U
4. SCHEMATIC 910 7092

ITEM NO: 9500851

MODELEY ASSOCIATES, INC.

ASSEMBLY
SCG-9A STEREO GENERATOR

21C2628 L

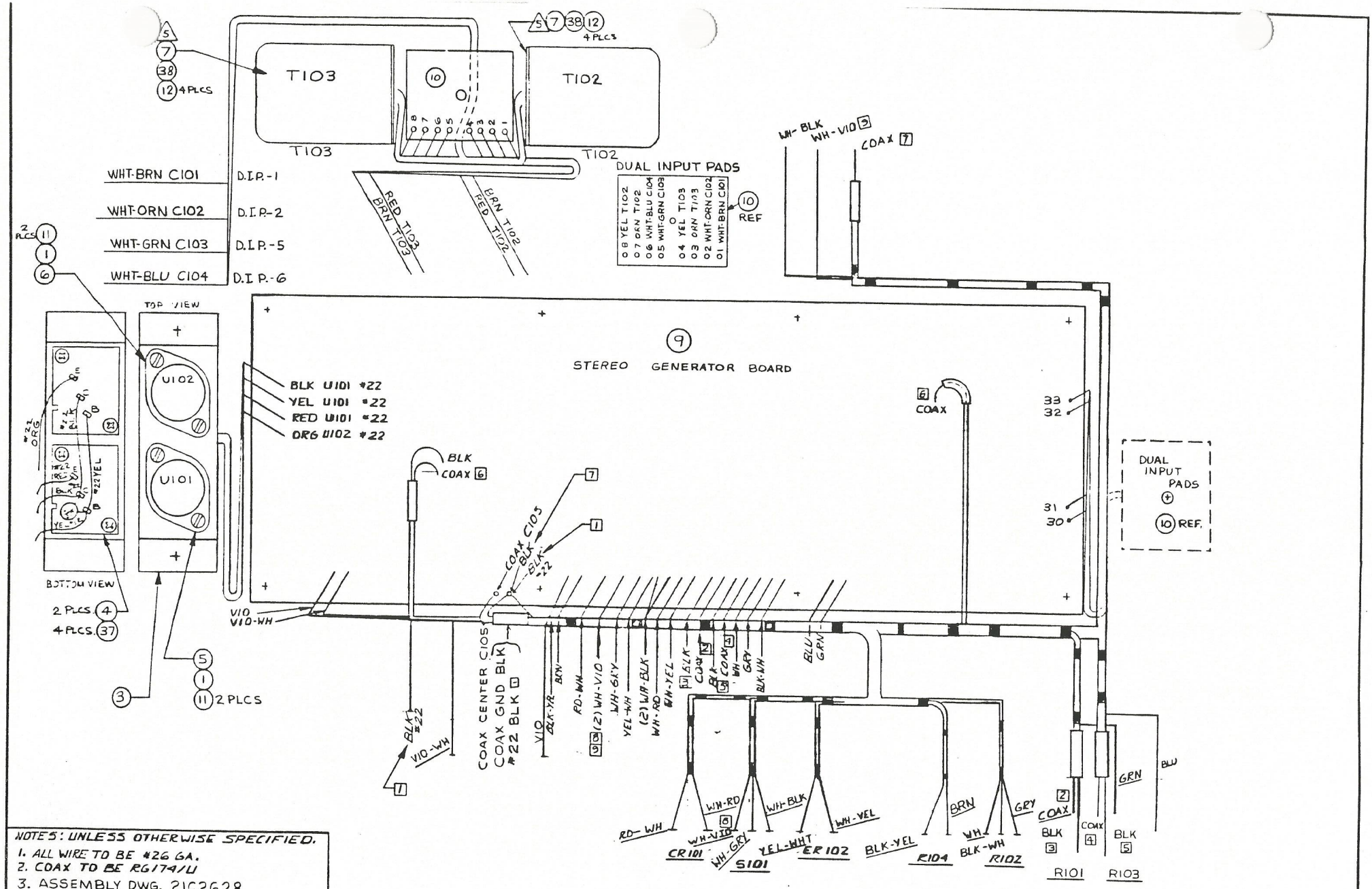


NOTES: UNLESS OTHERWISE SPECIFIED.

1. ALL WIRE TO BE #26 GA.
2. COAX TO BE RG174/U
3. ASSEMBLY DWG. 21C2628
4. WIRING SEQUENCE:
   A. STEREO GEN. BD.
   B. DUAL INPUT PADS AND T102, T103 (ON TOP DIAGRAM)
   C. DUAL INPUT BD TO STEREO GEN. (AT TERMINALS #30 THRU #33
5. USE TRANSFORMER BRACKET SUPPLIED WITH TRANSFORMER.

ITEM NO: 2350346

| | | | |
|---|---|---|---|
| C | ADD NOTE 5 ECO 5079 4-5-84 RE | | |
| B | UPDATE TO CO STD ECO 4624 26 NOV 85 CH | | |
| A | REV. FOR COMPUTER CONVERSION ADDED P/L | | |

REVISIONS | MGRT. APPL. | DATE

MOSELEY ASSOCIATES, INC.
SANTA BARBARA RESEARCH PARK
GOLETA, CALIFORNIA 93117

HARNESS
SCG-9A

TOL: FRACT. ± 1/32 .XX ± .030 .XXX ± .010 ∠ ± 1/2°

DWN | CHK | ENG | SCALE:

29C1032 C

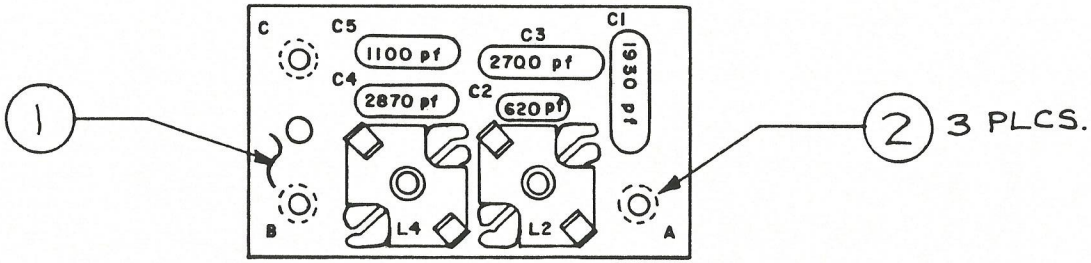


NOTES:

1. SCHEMATIC 91A 6809
2. P. C. BOARD 51A 5644

ITEM NO: 9201146

| | | | |
|---|---|---|---|
| C | UPDATE TO CO STDS. ADD ITEM 2 ECO 4773 1 MAY 86 CH | | |
| B | REV. FOR COMPUTER CONVERSION ADDED P/L AUB. | | |
| A | ARTWORK REV-02 ADD 1/8 DIA. HOLE ECO 897 27 OCT. 77 BWF | | |
| REVISIONS | DATE | MGMT. APPR. | |

**MOSELEY ASSOCIATES, INC.**
SANTA BARBARA RESEARCH PARK
GOLETA, CALIFORNIA 93017

COMPONENT LAYOUT
SCG-9A AUDIO LOW PASS FILTER BOARD

TOL: FRACT. ± 1/32, .XX ± .030, .XXX ± .010, ∠ ± 1/2°

| | | | |
|---|---|---|---|
| DWN | JWM | 3-11-75 | SCALE: |
| CHK | FXY | 17 MAR 75 | 20A 2514 C |
| ENG | JCT | 18 MAR 75 | |

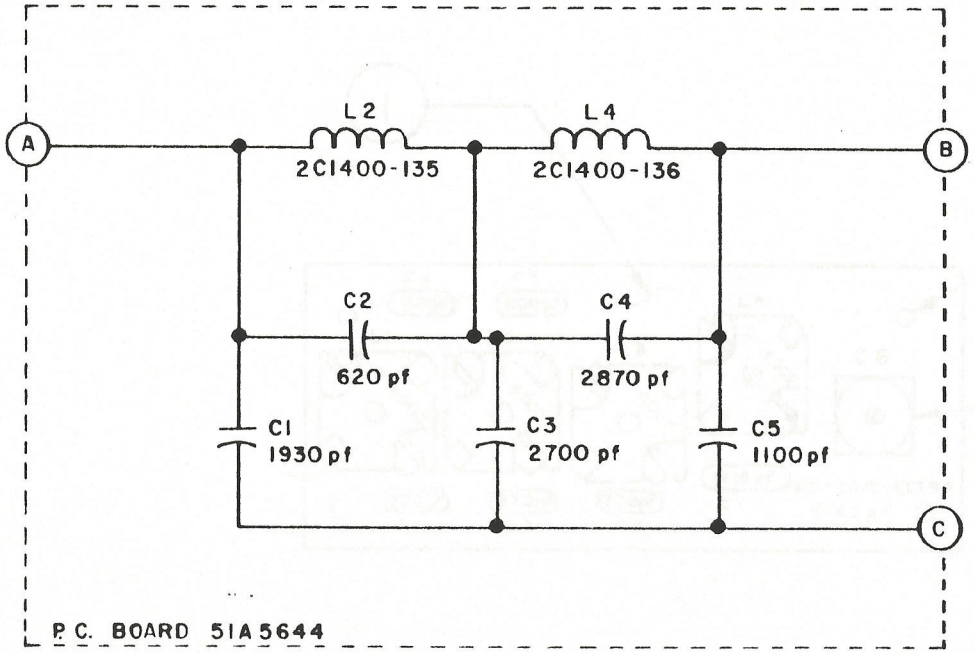


NOTES:

1. COMPONENT LAYOUT 20A2514

| REVISIONS | DATE | MGMT. APPR. |
|---|---|---|

**MOSELEY ASSOCIATES, INC.**
SANTA BARBARA RESEARCH PARK
GOLETA, CALIFORNIA 93017

SCHEMATIC
SCG-9 AUDIO LOW PASS FILTER

TOL: FRACT. ± 1/32, .XX ± .030, .XXX ± .010, ∠ ± 1/2°

| | | | |
|---|---|---|---|
| DWN | JHM | 3-11-75 | SCALE: |
| CHK | FXY | 17 MAR 75 | 91A 6809 |
| ENG | JCT | 18 MAR 75 | |

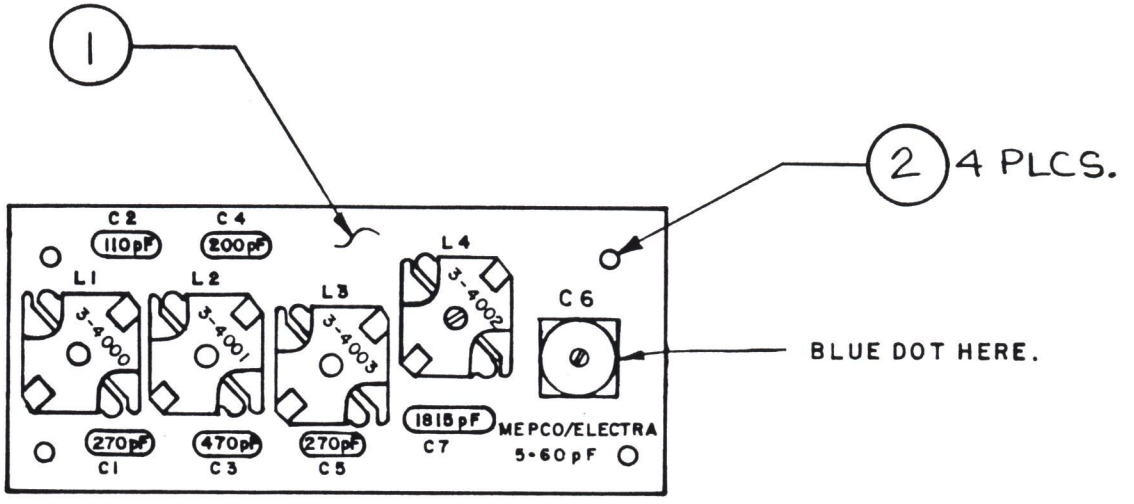


NOTES

1 P.C. BOARD 51A5765

2 SCHEMATIC 91A7064

ITEM NO: 9200734

| REVISIONS | DATE | |
|---|---|---|
| D | ADD ITEM 2 UPDATE TO CO STD. ECO 4768 1MAY86 CH | |
| C | REVISED FOR COMPUTER CONVERSION ALSO ADDED P/L NOV 3 81 AJB | |
| B | ARTWORK CHG 51A5765-03 22 FEB 79 ECO1062 L.I. | |
| A | CO WAS 10-80PF 18JAN79 ECO1062 L.I. | |

MGMT. APPR.

**MOSELEY ASSOCIATES, INC.**
SANTA BARBARA RESEARCH PARK
GOLETA, CALIFORNIA 93017

# COMPONENT LAYOUT
## BTS-101, SCG-9A 53KHz LPF

TOL: FRACT. ± 1/32, .XX ± .030, .XXX ± .010, ∠ ± 1/2°

| | | | |
|---|---|---|---|
| DWN | BWF | 31 Oct. 77 | SCALE: FULL |
| CHK | FXY | 4 NOV 77 | 20A2632 D |
| ENG | JCT | 4 NOV 77 | |

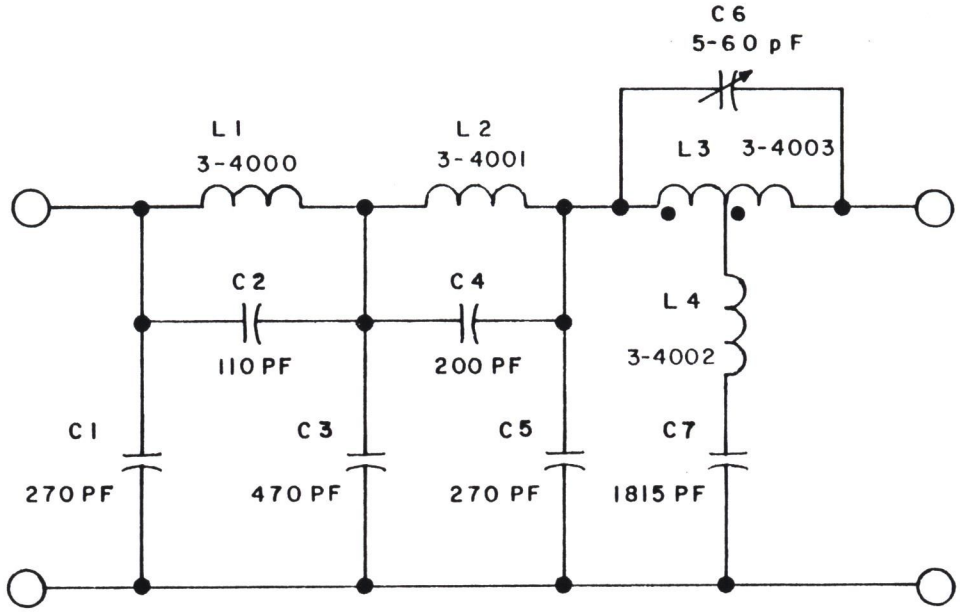


NOTES:

1. P.C. BOARD 51A5765
2. COMPONENT LAYOUT 20A2632



| REVISIONS | | DATE |
|---|---|---|
| A | C6 WAS 10-80P4 13 JAN 79 ECO 1062 L.I. | |

MGMT. APPR.

**MOSELEY ASSOCIATES, INC.**
SANTA BARBARA RESEARCH PARK
GOLETA, CALIFORNIA 93017

# SCHEMATIC
## BTS-101, SCG-9A 53 KHz LPF

TOL: FRACT. ± 1/32, .XX ± .030, .XXX ± .010, ∠ ± 1/2°

| | | | |
|---|---|---|---|
| DWN | BWF | 28 Oct. 77 | SCALE: |
| CHK | FXY | 4 NOV 77 | 91A7064 A |
| ENG | JCP | 4 NOV 77 | |

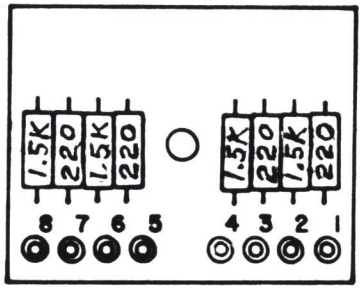


NOTES

1 UNLESS OTHERWISE SPECIFIED
RESISTOR VALUES ARE IN OHMS, 1/4 W, 5%.

2 P.C. BOARD 51A5810

3 SCHEMATIC 91D7092

| QTY. | DESCRIPTION | STOCK NO. | ITEM |
|---|---|---|---|
| * | COMP. LAYOUT 20A2667 | 9200478 | * |

| REVISIONS | | DATE | MGMT. APPR. |
|---|---|---|---|
| B | CHG RES VALUES FROM 820 TO 1.5K & 220 CHG NOTES 1 & 3 ECO 5079 9-5-80 RE | | |
| A | REV. FOR COMPUTER CONVERSION ALSO ADDED P/L 3 NOV 81 AJR | | |

MOSELEY ASSOCIATES, INC.
SANTA BARBARA RESEARCH PARK
GOLETA, CALIFORNIA 93017

# COMPONENT LAYOUT
## SCG-9A DUAL INPUT PADS

TOL: FRACT. ± 1/32, .XX ± .030, .XXX ± .010, ∠ ± 1/2°

| | | | |
|---|---|---|---|
| DWN | BWF | 4 Nov 77 | SCALE: FULL |
| CHK | FXY | 4 NOV 77 | 20A2667 B |
| ENG | JCP | 4 NOV 77 | |

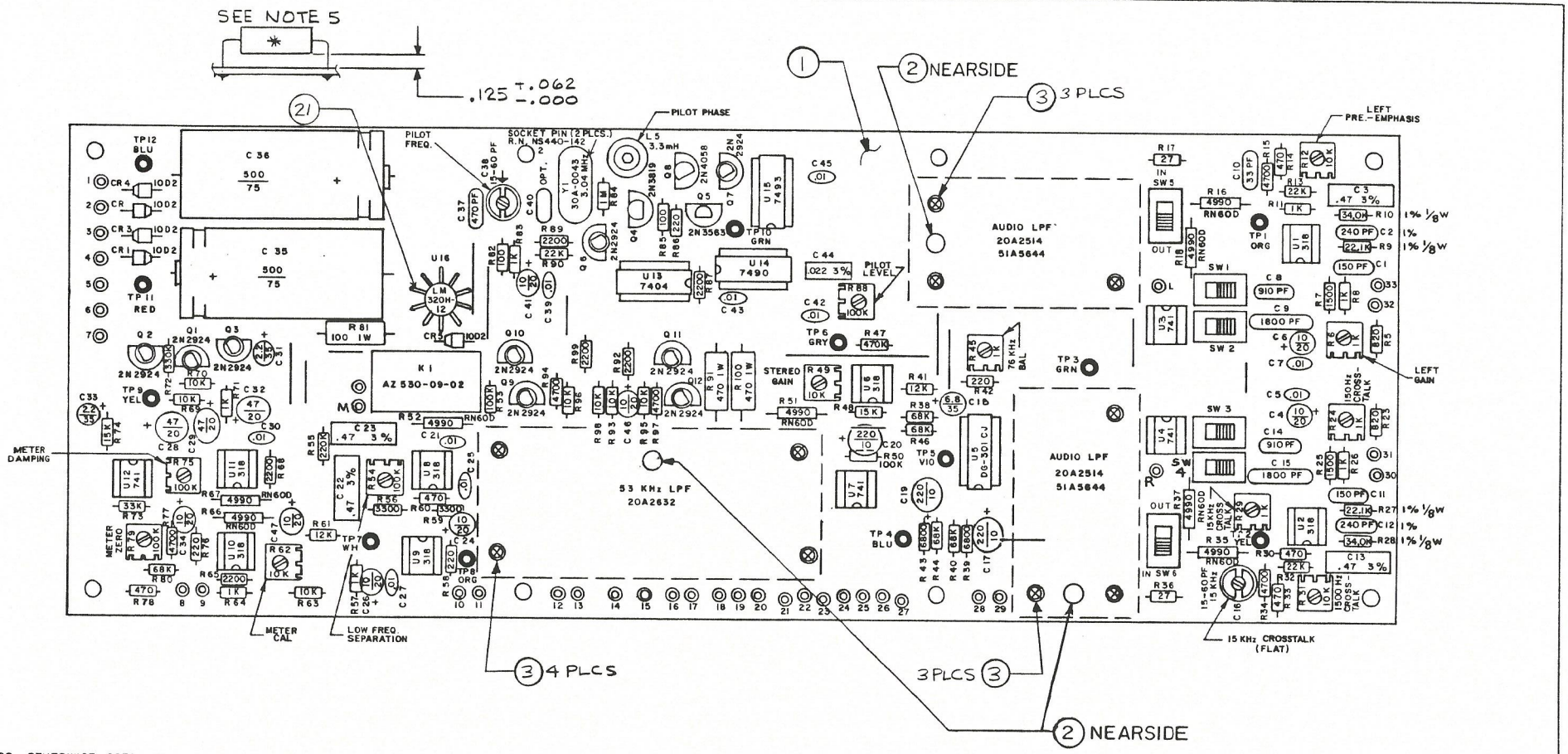


NOTES

1. UNLESS OTHERWISE SPECIFIED RESISTOR VALUES ARE IN OHMS, 1/4 W, 10%
   CAPACITOR VALUES ARE IN MICROFARADS
2. P.C. BOARD 5185804
3. SCHEMATIC 91D7092
4. ⊗ DENOTES STIMPSON GS-4-6 INSTALL THIS SIDE SOLDER ON FAR SIDE.
5. * MOUNT RESISTORS R81, R91, AND R100 .125 ABOVE P.C. BD. AS SHOWN.

ITEM NO: 9200262

| | |
|---|---|
| J | CHG NOTE 4 & 5. ADD BALLOON NOS ECO 4954 10-16-87 AE |
| H | UPDATE DWG PER CURRENT PRACTICES OBSOLETE PARTS LIST DWG SHOW REF DES: M, R, SW4 ECO 4207 20 AUG 84 CH |
| G | Show Comp Detail Add Note 5 ECO 5010 8-2-82 JCR |
| F1 | CORRECT REF. DES.: U9 WAS U5, C18 WAS C75 ECO 3474 23 APR 82 CH |
| E1 | 5185804-14 WAS 5185804-03, ECO 3467 LDH 15 APR 82 |
| D1 | REV. FOR COMPUTER CONVERSION ALSO ADDED P/L TRNV/BIA1 |
| C1 | CHG. R9, R10, R27, R28, C2, C12 ALL VALUES ARE LOGGED ON ECO 1867B AND R7, R8 ADJ. |
| B1 | ADDED ASSY SYMBOL TO GND ADJ SCREW OF C38 PCO1873 LDH 22 NOV 80 |
| B | ADJUSTMENT LABLES ADDED AJB 26 AUG 78 |
| A | U18 TYPO WAS U18 7443 81 A116 78 BWF |
| REVISIONS | DATE |
| MGMT. APPR. | |

**MOSELEY ASSOCIATES, INC.**
SANTA BARBARA RESEARCH PARK
GOLETA, CALIFORNIA 93017

COMPONENT LAYOUT
STEREO GENERATOR SCG-9A

TOL: FRACT. ± 1/32. .XX ± .030. .XXX ± .010. ∠ ± 1/2°

| | | | |
|---|---|---|---|
| DWN | BWF | 20 APR 78 | SCALE: |
| CHK | FXY | 24 APR 78 | 20B2681 J |
| ENG | JCT | 21 APR 78 | |

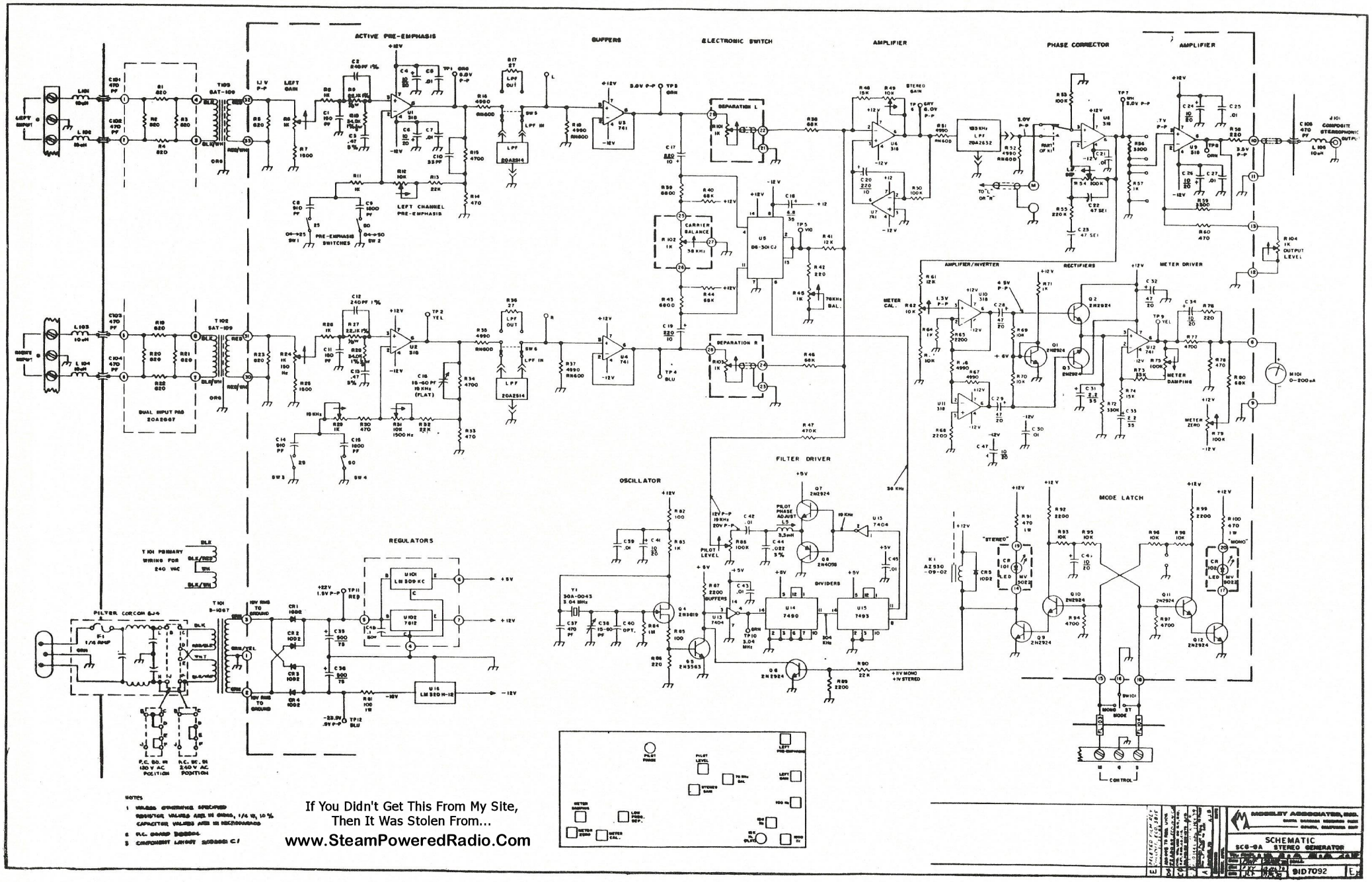
ACTIVE PRE-EMPHASIS
BUFFERS
ELECTRONIC SWITCH
AMPLIFIER
PHASE CORRECTOR
AMPLIFIER
LEFT INPUT
RIGHT INPUT
LEFT GAIN
LEFT CHANNEL PRE-EMPHASIS
PRE-EMPHASIS SWITCHES
DUAL INPUT PCB 20A2667
SEPARATION L
SEPARATION R
CARRIER BALANCE
38 KHz
19 KHz
78 KHz BAL.
STEREO GAIN
AMPLIFIER/INVERTER
RECTIFIERS
METER DRIVER
METER CAL.
METER DAMPING
METER ZERO
COMPOSITE STEREOPHONIC OUTPUT
OUTPUT LEVEL
FILTER DRIVER
OSCILLATOR
PILOT LEVEL
PILOT PHASE ADJUST
DIVIDERS
BUFFERS
REGULATORS
MODE LATCH
"STEREO"
"MONO"
MONO ST MODE
CONTROL
T101 PRIMARY WIRING FOR 240 VAC
FILTER CORCOM 6J4
P.C. BD. IN 120 V AC POSITION
P.C. BD. IN 240 V AC POSITION
NOTES
1 UNLESS OTHERWISE SPECIFIED
RESISTOR VALUES ARE IN OHMS, 1/4 W, 10 %
CAPACITOR VALUES ARE IN MICROFARADS
2 P.C. BOARD 20B2664
3 COMPONENT LAYOUT 20B2665 C1
If You Didn't Get This From My Site,
Then It Was Stolen From...
www.SteamPoweredRadio.Com
MOSELEY ASSOCIATES, INC.
SCHEMATIC
SCG-9A
STEREO GENERATOR
SID7092

MOSELEY ASSOCIATES, INC.
111 CASTILIAN DRIVE
SANTA BARBARA, CA 93117-3093
(805) 968-9621

PAGE: 1

DATE:11/07/89

PARENT ITEM: 9500851 DESCRIPTION: ASSY SCG-9A STEREO GENERATOR
ENG.DRAWING NO.: 21C2628 L

| REF NBR | COMPONENT ITEM NBR | COMPONENT DESCRIPTION & COMMENTS | ENG.DRAWING NO. | | QUANTITY PER | UM |
|---|---|---|---|---|---|---|
| 1 | 2010528 | PANEL FRONT SCG 9A | 05C2286 | H | 1.000 | EA |
| 2 | 2030195 | DETAIL CHASSIS SCG-9A | 05D2287 | N | 1.000 | EA |
| 3 | 2061885 | SHIELD PARTITION SCG-9A | 05C2288 | G | 1.000 | EA |
| 4 | 1090315 | SCR BTH SKT CAP 6-32 X 3/8 | | | 4.000 | EA |
| 6 | 2060861 | BRACKET SCG-9A<br>R101,R102,R103,R104 | 05A2534 | C | 4.000 | EA |
| 8 | 3010097 | METER EDGW 0-200<br>M101 | 673/S 50A5110 | | 1.000 | EA |
| 9 | 3390135 | LED RED 1.6@20 POINT SOURCE<br>CR101,CR102 | MV-5022 | | 2.000 | EA |
| 10 | 3160165 | SW TGL SPDT (ON)-OFF-(ON)<br>S101 | 7105P3Y1ZQE | | 1.000 | EA |
| 13 | 1330000 | ASSY BSHG | 4-1019 | | 4.000 | ST |
| 14 | 3370046 | CONN PWR W/FUSE FILTER 6J4 | 6J4 | | 1.000 | EA |
| 15 | 3430030 | LBL FUSE "1/8AMP-1/4AMP" | 85-1500 | | 1.000 | EA |
| 16 | 3370228 | FUSE 1/4 AMP SLOW-BLO | MDL 1/4 | | 1.000 | EA |
| 17 | 4090205 | XFMR 8-P-58<br>T101 | 3-1067 | AO | 1.000 | EA |
| 18 | 1641554 | W STRD 18GA BLACK 16/30 | MIL-W76B TYPEMW | | .500 | FT |
| 19 | 1641646 | W STRD 18GA WHITE 16/30 | MIL-W76B TYPEMW | | .500 | FT |
| 21 | 3290269 | BARR STP 9 TERM 3/8" SPCG BLK | 71609-49-E | | 1.000 | EA |
| 22 | 3030244 | CONN BNC BULKHD UG-1094/U<br>J101 | 31-221 | | 1.000 | EA |
| 23 | 4630117 | POT CARBON PANEL 1K OHM<br>R101,R102,R103,R104 | 34466 | | 4.000 | EA |
| 25 | 4020376 | IDCTR RF 10 UH<br>L101,L102,L103,L104,L105 | 74F105AP | | 5.000 | EA |
| 26 | 1641216 | W STRD 26GA WHITE-BLACK | BU-734-26*90 | | .500 | FT |
| 27 | 1641281 | W STRD 26GA WHITE-VIOLET | BU-734-26*97 | | .500 | FT |
| 28 | 3430071 | LBL HIGH VOLTAGE SYMBOL | 10A1058-2 | AO | 1.000 | EA |
| 29 | 1560044 | TBG SHRINK 1/4" CLEAR | FIT 221 1/4CL | | .250 | FT |
| 30 | 1050129 | SCR PNH PHPS 4-40 X 1/4 SST | | | 18.000 | EA |
| 31 | 1641943 | W BUSS 26GA | 299/1 | | .500 | FT |
| 32 | 1560259 | TBG TEFLON 26AWG NAT | TFT200-26 | | .500 | FT |
| 33 | 1090224 | SCR PNH PHPS 6-32 X 1/2 SST | | | 2.000 | EA |
| 34 | 2060341 | CVR | 05A2684 | E | 1.000 | EA |
| 35 | 1090596 | WSHR LK #6 SR CD PL | | | 2.000 | EA |
| 36 | 9201146 | AUDIO LOW PASS FILTER BD SCG-9 | 20A2514 | C | 2.000 | EA |
| 37 | 9200734 | LPF 53 KHZ BTS-101/SCG-9A | 20A2632 | D | 1.000 | EA |
| 38 | 1090554 | NUT HEX 6-32 SM PATT | | | 3.000 | EA |
| 39 | 1090703 | LUG LKG #6 | 1413-6 | | 1.000 | EA |
| 40 | 1090182 | SCR PNH PHPS 6-32 X 1/4 SST | | | 18.000 | EA |
| 42 | 3190121 | NUT DECRTV<br>S101 | A7760 | | 1.000 | EA |
| 43 | 2350346 | ASSY HARNESS SCG-9A | 29C1032 | C | 1.000 | EA |

| REF NBR | COMPONENT ITEM NBR | COMPONENT DESCRIPTION & COMMENTS | ENG.DRAWING NO. | QUANTITY PER | UM |
|---|---|---|---|---|---|
| 44 | 1190073 | LUG | 334 W/.375 | 1.000 | EA |
| 45 | 4350047 | CAP FD THRU 20% 470PF<br>C101,C102,C103,C104,C105 | 54-794-002-471M | 5.000 | EA |
| 46 | 4350062 | CAP FD THRU FLTRCON 2000PF<br>FL103,FL104 | 1204-050 | 2.000 | EA |
| 47 | 1210137 | EYELET BRASS | GS6-5 | 1.000 | EA |

MOSELEY ASSOCIATES, INC.
111 CASTILIAN DRIVE
SANTA BARBARA, CA 93117-3093
(805) 968-9621



DATE:11/07/89

PARENT ITEM: 2350346 DESCRIPTION: ASSY HARNESS SCG-9A
ENG.DRAWING NO.: 29C1032 C

| REF NBR | COMPONENT ITEM NBR | COMPONENT DESCRIPTION & COMMENTS | ENG.DRAWING NO. | | QUANTITY PER | UM |
|---|---|---|---|---|---|---|
| 1 | 1290162 | SIL PAD<br>U101,U102 | 7403-09-FR-05 | | 2.000 | EA |
| 3 | 2061323 | BRACKET SCG-9A TGR 340 TAL 320 | 05A2480 | D | 1.000 | EA |
| 4 | 3250214 | SKT XSTR/LAM | LST2202-2 | | 2.000 | EA |
| 5 | 3650033 | RGLTR LM309K 05V 1.5A TO3<br>U101 | LM309K | | 1.000 | EA |
| 6 | 3650199 | RGLTR UA7812KC 12V 1.5A TO3<br>U102 | 7812KC | | 1.000 | EA |
| 7 | 4100079 | XFMR AUDIO BRIDGE 10K:600 4:1<br>T102,T103 | JE10KB-C | | 2.000 | EA |
| 8 | 4310207 | CAP .1UF/50V 20%<br>C48 | CY20C104M | | 1.000 | EA |
| 9 | 9200262 | STEREO GENERATOR SCG-9A | 20B2681 | J | 1.000 | EA |
| 10 | 9200478 | PADS DUAL INPUT SCG-9A | 20A2667 | B | 1.000 | EA |
| 11 | 1090489 | SCR PNH SLTD #6 X 5/8 TYP B<br>U101,U102 | | | 4.000 | EA |
| 12 | 1050129 | SCR PNH PHPS 4-40 X 1/4 SST<br>T102,T103 | | | 8.000 | EA |
| 13 | 1640374 | W STRD 22GA BLACK | BU-730-22*0 | | 2.000 | FT |
| 14 | 1640390 | W STRD 22GA RED | BU-730-22*2 | | 1.167 | FT |
| 15 | 1640403 | W STRD 22GA ORANGE | BU-730-22*3 | | 1.167 | FT |
| 16 | 1640416 | W STRD 22GA YELLOW | BU-730-22*4 | | 1.500 | FT |
| 17 | 1640788 | W STRD 26GA BROWN | BU-734-26*1 | | 1.000 | FT |
| 18 | 1640820 | W STRD 26GA GREEN | BU-734-26*5 | | 1.000 | FT |
| 19 | 1640838 | W STRD 26GA BLUE | BU-734-26*6 | | .833 | FT |
| 20 | 1640846 | W STRD 26GA VIOLET | BU-734-26*7 | | .667 | FT |
| 21 | 1640853 | W STRD 26GA GRAY | BU-734-26*8 | | .833 | FT |
| 22 | 1640861 | W STRD 26GA WHITE | BU-734-26*9 | | 1.000 | FT |
| 23 | 1640887 | W STRD 26GA BLACK-YELLOW | BU-734-26*04 | | 1.000 | FT |
| 24 | 1640903 | W STRD 26GA BLACK-WHITE | BU-734-26*09 | | .833 | FT |
| 25 | 1640936 | W STRD 26GA RED-WHITE | BU-734-26*29 | | 1.500 | FT |
| 26 | 1641166 | W STRD 26GA YELLOW-WHITE | BU-734-26*49 | | .833 | FT |
| 27 | 1641190 | W STRD 26GA VIOLET-WHITE | BU-734-26*79 | | .667 | FT |
| 28 | 1641216 | W STRD 26GA WHITE-BLACK | BU-734-26*90 | | 2.833 | FT |
| 29 | 1641224 | W STRD 26GA WHITE-BROWN | BU-734-26*91 | | 1.167 | FT |
| 30 | 1641232 | W STRD 26GA WHITE-RED | BU-734-26*92 | | 1.000 | FT |
| 31 | 1641240 | W STRD 26GA WHITE-ORANGE | BU-734-26*93 | | 1.167 | FT |
| 32 | 1641257 | W STRD 26GA WHITE-YELLOW | BU-734-26*94 | | .833 | FT |
| 33 | 1641265 | W STRD 26GA WHITE-GREEN | BU-734-26*95 | | 1.167 | FT |
| 34 | 1641273 | W STRD 26GA WHITE-BLUE | BU-734-26*96 | | 1.167 | FT |
| 35 | 1641281 | W STRD 26GA WHITE-VIOLET | BU-734-26*97 | | 3.000 | FT |
| 36 | 1641299 | W STRD 26GA WHITE-GRAY | BU-734-26*98 | | 1.000 | FT |
| 37 | 1050103 | SCR PNH PHPS 4-40 X 3/16 SS<br>U101,U102 | | | 4.000 | EA |
| 38 | 1050707 | LUG LKG #4<br>T102,T103 | T-229 | | 2.000 | EA |

MOSELEY ASSOCIATES, INC.
111 CASTILIAN DRIVE
SANTA BARBARA, CA 93117-3093
(805) 968-9621



DATE: 11/07/89

PARENT ITEM: 9201146 DESCRIPTION: AUDIO LOW PASS FILTER BD SCG-9
ENG.DRAWING NO.: 20A2514 C

| REF NBR | COMPONENT ITEM NBR | COMPONENT DESCRIPTION & COMMENTS | ENG.DRAWING NO. | | QUANTITY PER | UM |
|---|---|---|---|---|---|---|
| 1 | 3470580 | PCB AUDIO LPF SCG-9A | 51A5644 | D | 1.000 | EA |
| 2 | 3290715 | PLUG CKT BD | 3268 | | 3.000 | EA |
| 3 | 4041166 | ASSY 44.58MH CUP CORE COIL L2 | 02C1400-135 | E | 1.000 | EA |
| 4 | 4041174 | ASSY 21.25MH CUP CORE COIL L4 | 02C1400-136 | E | 1.000 | EA |
| 5 | 4210498 | CAP MICA DIP 620PF 5% C2 | DM-15-621J | | 1.000 | EA |
| 6 | 4220026 | CAP MICA DIP 1100PF 5% C5 | DM-19-112J | | 1.000 | EA |
| 7 | 4220117 | CAP MICA DIP 1930PF 2% C1 | DM-19-1931G | | 1.000 | EA |
| 8 | 4220174 | CAP MICA DIP 2870PF 2% C4 | DM-19-F2871G | | 1.000 | EA |
| 9 | 4230009 | CAP MICA DIP 2700PF 5% C3 | DM-20-272J | | 1.000 | EA |

MOSELEY ASSOCIATES, INC.
111 CASTILIAN DRIVE
SANTA BARBARA, CA 93117-3093
(805) 968-9621



DATE:11/07/89

PARENT ITEM: 9200734 DESCRIPTION: LPF 53 KHZ BTS-101/SCG-9A
ENG.DRAWING NO.: 20A2632 D

| REF NOR | COMPONENT ITEM NBR | COMPONENT DESCRIPTION & COMMENTS | ENG.DRAWING NO. | | QUANTITY PER | UM |
|---|---|---|---|---|---|---|
| 1 | 3470226 | PCB 53KHZ BTS101 SCG9A | 51A5765 | D | 1.000 | EA |
| 2 | 3290715 | PLUG CKT BD | 3268 | | 4.000 | EA |
| 3 | 4041430 | ASSY CUP CORE COIL RM6 IDCTR L1 | 03-4000 | A1 | 1.000 | EA |
| 4 | 4041448 | ASSY CUP CORE COIL RM6 IDCTR L2 | 03-4001 | A1 | 1.000 | EA |
| 5 | 4041455 | ASSY CUP CORE COIL RM6 IDCTR L4 | 03-4002 | B1 | 1.000 | EA |
| 6 | 4041463 | ASSY CUP CORE COIL RM6 BIFILA L3 | 03-4003 | B1 | 1.000 | EA |
| 7 | 4210274 | CAP MICA DIP 110PF 5% C2 | DM-15-111J | | 1.000 | EA |
| 8 | 4210340 | CAP MICA DIP 200PF 5% C4 | DM-15-201J | | 1.000 | EA |
| 9 | 4210399 | CAP MICA DIP 270PF 5% C1,C5 | DM-15-271J | | 2.000 | EA |
| 10 | 4210456 | CAP MICA DIP 470PF 5% C3 | DM-15-471J | | 1.000 | EA |
| 11 | 4220109 | CAP MICA DIP 1815PF 2% C7 | DM-19-F18150G | | 1.000 | EA |
| 12 | 4370268 | CAP VAR PC MT 5-60PF C6 | 281ODD0560QN02F | | 1.000 | EA |

MOSELEY ASSOCIATES, INC.
111 CASTILIAN DRIVE
SANTA BARBARA, CA 93117-3093
(805) 968-9621



DATE: 11/07/89

PARENT ITEM: 9200478 DESCRIPTION: PADS DUAL INPUT SCG-9A
ENG.DRAWING NO.: 20A2667 B

| REF NBR | COMPONENT ITEM NBR | COMPONENT DESCRIPTION & COMMENTS | ENG.DRAWING NO. | QUANTITY PER | UM |
|---|---|---|---|---|---|
| | 3470135 | PCB DUAL INPUT PADS | 51A5810 B1 | 1.000 | EA |
| | 4460077 | RES 220 OHM 1/4W 5% | RC07GF221J | 4.000 | EA |
| | 4460168 | RES 1.5K OHM 1/4W 5% | RC07GF152J | 4.000 | EA |

MOSELEY ASSOCIATES, INC.
111 CASTILIAN DRIVE
SANTA BARBARA, CA 93117-3093
(805) 968-9621



DATE: 11/07/89

PARENT ITEM: 9200262 DESCRIPTION: STEREO GENERATOR SCG-9A
ENG.DRAWING NO.: 2082681 J

| REF NBR | COMPONENT ITEM NBR | COMPONENT DESCRIPTION & COMMENTS | ENG.DRAWING NO. | QUANTITY PER | UM |
|---|---|---|---|---|---|
| 1 | 3471166 | PCB SCG-9A STEREO GENERATOR | 5185804 G | 1.000 | EA |
| 2 | 1230465 | STDF 1/4 SWG 4-40X1/8X.105 AL | 9531-BA-0440-0 | 3.000 | EA |
| 3 | 1210095 | EYELET BRASS | GS4-6 | 10.000 | EA |
| 5 | 3250230 | SKT XSTR<br>Q1,Q2,Q3,Q4,Q5,Q6,Q7,Q8,Q9,Q10,Q11,Q12,U16 | 3-LPS-B | 13.000 | EA |
| 6 | 3250016 | SKT DUAL IN LINE 8 PIN<br>U1,U2,U3,U4,U6,U7,U8,U9,U10,U11,U12 | 2-640463-1 | 11.000 | EA |
| 7 | 3250024 | SKT DUAL IN LINE 14 PIN<br>U5,U13,U14,U15 | 2-640357-1 | 4.000 | EA |
| 8 | 3250487 | PIN SKT<br>Y1 | NS441-A2 | 2.000 | EA |
| 9 | 3290046 | TEST PT RED VERT<br>TP11 | 105-0852-001 | 1.000 | EA |
| 10 | 3290053 | TEST PT ORANGE VERT<br>TP1,TP8 | 105-0856-001 | 2.000 | EA |
| 11 | 3290061 | TEST PT YELLOW VERT<br>TP2,TP9 | 105-0857-001 | 2.000 | EA |
| 12 | 3290079 | TEST PT GREEN VERT<br>TP3,TP10 | 105-0854-001 | 2.000 | EA |
| 13 | 3290087 | TEST PT BLUE VERT<br>TP4,TP12 | 105-0860-001 | 2.000 | EA |
| 14 | 3290095 | TEST PT VIOLET VERT<br>TP5 | 105-0862-001 | 1.000 | EA |
| 15 | 3290103 | TEST PT GRAY VERT<br>TP6 | 105-0863-001 | 1.000 | EA |
| 16 | 3290111 | TEST PT WHITE VERT<br>TP7 | 105-0851-001 | 1.000 | EA |
| 17 | 3190253 | SW SLD<br>SW1,SW2,SW3,SW4,SW5,SW6 | 23 021 114 | 6.000 | EA |
| 18 | 4040069 | IDCTR ADJ RF 2.40-4.10 MH<br>L5 | 23A333RPC | 1.000 | EA |
| 19 | 3340114 | XTAL 3.04 MHZ SCG-9<br>Y1 | 30A0043 | 1.000 | EA |
| 20 | 3270113 | RELAY MIN PC 200OHM 12V NOM<br>K1 | AZ-2530-09-2 | 1.000 | EA |
| 21 | 2110005 | HEATSINK TO 5-9 11-12<br>U16 | NF-204 | 1.000 | EA |
| 22 | 4370169 | CAP PC MINVAR 15-60PF N1500<br>C16,C38 | DV11PS60J | 2.000 | EA |
| 23 | 4310132 | CAP DISC .01/50V<br>C5,C7,C21,C25,C27,C30,C39,C42,C43,C45 | UK-50-103 | 10.000 | EA |
| 24 | 4250286 | CAP POLYCARB .022/100V 3%<br>C44 | 22UB223H | 1.000 | EA |
| 25 | 4250627 | CAP POLYCARB .47/100V 3%<br>C3,C13,C22,C23 | 22UB474H | 4.000 | EA |

| REF NBR | COMPONENT ITEM NBR | COMPONENT DESCRIPTION & COMMENTS | ENG.DRAWING NO. | QUANTITY PER | UM |
|---|---|---|---|---|---|
| 26 | 4280046 | CAP TANT EPOX-DIP 2.2/35V 20%<br>C31,C33 | 199D225X0035CA2 | 2.000 | EA |
| 27 | 4280061 | CAP TANT EPOX-DIP 6.8/35V 20%<br>C18 | 199D685X0035BA2 | 1.000 | EA |
| 28 | 4280079 | CAP TANT EPOX-DIP 10/20V 20%<br>C4,C6,C24,C26,C34,C41,C46,C47 | 199D106X0020CA2 | 8.000 | EA |
| 29 | 4280137 | CAP TANT EPOX-DIP 47/20V<br>C28,C29,C32 | 199D476X0020EE3 | 3.000 | EA |
| 30 | 4280186 | CAP TANT EPOX-DIP 220/10V 10%<br>C17,C19,C20 | K220E10 | 3.000 | EA |
| 31 | 4210142 | CAP MICA DIP 33PF 5%<br>C10 | DM-15-330J | 1.000 | EA |
| 32 | 4210308 | CAP MICA DIP 150PF 5%<br>C1,C11 | DM-15-151J | 2.000 | EA |
| 33 | 4210365 | CAP MICA DIP 240PF 1%<br>C2,C12 | DM-15-241F | 2.000 | EA |
| 34 | 4210456 | CAP MICA DIP 470PF 5%<br>C37 | DM-15-471J | 1.000 | EA |
| 35 | 4210548 | CAP MICA DIP 910PF 5%<br>C8,C14 | DM-15-911J | 2.000 | EA |
| 36 | 4220091 | CAP MICA DIP 1800PF 1%<br>C9,C15 | DM-19-182F | 2.000 | EA |
| 38 | 4260196 | CAP TB-LYTIC 500/75V<br>C35,C36 | WBR-500-75 | 2.000 | EA |
| 39 | 4410056 | RES 27 OHM 1/4W 10%<br>R17,R36 | RC07GF270K | 2.000 | EA |
| 40 | 4410122 | RES 100 OHM 1/4W 10%<br>R82,R85 | RC07GF101K | 2.000 | EA |
| 41 | 4410163 | RES 220 OHM 1/4W 10%<br>R42,R58,R76,R86 | RC07GF221K | 4.000 | EA |
| 42 | 4410205 | RES 470 OHM 1/4W 10%<br>R14,R30,R33,R60,R78 | RC07GF471K | 5.000 | EA |
| 43 | 4410239 | RES 820 OHM 1/4W 10%<br>R5,R23 | RC07GF821K | 2.000 | EA |
| 44 | 4410247 | RES 1K OHM 1/4W 10%<br>R8,R11,R26,R57,R64,R71,R83 | RC07GF102K | 7.000 | EA |
| 45 | 4410262 | RES 1.5K OHM 1/4W 10%<br>R7,R25 | RC07GF152K | 2.000 | EA |
| 46 | 4410288 | RES 2.2K OHM 1/4W 10%<br>R65,R68,R87,R89,R92,R99 | RC07GF222K | 6.000 | EA |
| 47 | 4410304 | RES 3.3K OHM 1/4W 10%<br>R56,R59 | RC07GF332K | 2.000 | EA |
| 48 | 4410338 | RES 4.7K OHM 1/4W 10%<br>R15,R34,R77,R94,R97 | RC07GF472K | 5.000 | EA |
| 49 | 4410353 | RES 6.8K OHM 1/4W 10%<br>R39,R43 | RC07GF682K | 2.000 | EA |
| 50 | 4410379 | RES 10K OHM 1/4W 10%<br>R63,R69,R70,R93,R95,R96,R98 | RC07GF103K | 7.000 | EA |
| 51 | 4410387 | RES 12K OHM 1/4W 10%<br>R41,R61 | RC07GF123K | 2.000 | EA |
| 52 | 4410395 | RES 15K OHM 1/4W 10%<br>R48,R74 | RC07GF153K | 2.000 | EA |

| REF NBR | COMPONENT ITEM NBR | COMPONENT DESCRIPTION & COMMENTS | ENG.DRAWING NO. | QUANTITY PER | UM |
|---|---|---|---|---|---|
| 53 | 4410411 | RES 22K OHM 1/4w 10%<br>R13,R32,R90 | RC07GF223K | 3.000 | EA |
| 54 | 4410437 | RES 33K OHM 1/4w 10%<br>R73 | RC07GF333K | 1.000 | EA |
| 55 | 4410476 | RES 68K OHM 1/4w 10%<br>R38,R40,R44,R46,R80 | RC07GF683K | 5.000 | EA |
| 56 | 4410494 | RES 100K OHM 1/4W 10%<br>R50,R53 | RC07GF104K | 2.000 | EA |
| 57 | 4410536 | RES 220K OHM 1/4W 10%<br>R55 | RC07GF224K | 1.000 | EA |
| 58 | 4410551 | RES 330K OHM 1/4W 10%<br>R72 | RC07GF334K | 1.000 | EA |
| 59 | 4410577 | RES 470K OHM 1/4W 10%<br>R47 | RC07GF474K | 1.000 | EA |
| 60 | 4410601 | RES 1MEG OHM 1/4W 10%<br>R84 | RC07GF105K | 1.000 | EA |
| 61 | 4630057 | POT CER PC PIN 1K OHM .5W<br>R6,R24,R29,R43 | 3386R-1-102 | 4.000 | EA |
| 62 | 4630281 | POT CER PC PIN 10K OHM .5W<br>R12,R31,R49,R62 | 3386R-1-103 | 4.000 | EA |
| 63 | 4630513 | POT CER PC PIN 100K OHM .5W<br>R54,R75,R79,R88 | 3386R-1-104 | 4.000 | EA |
| 64 | 4520052 | RES 4.99K OHM 1/4w 1%<br>R16,R18,R35,R37,R51,R52,R66,R67 | RN60D4991F | 8.000 | EA |
| 65 | 4430013 | RES 100 OHM 1w 10%<br>R81 | RC32GF101K | 1.000 | EA |
| 66 | 4430062 | RES 470 OHM 1w 10%<br>R91,R100 | RC32GF471K | 2.000 | EA |
| 67 | 3610003 | DIO 1002 200V 1A SI DO39<br>CR1,CR2,CR3,CR4,CR5 | 1002 | 5.000 | EA |
| 68 | 3630027 | XT NS2N2924LFS.2W160M025V.1A7P<br>Q1,Q2,Q3,Q6,Q7,Q9,Q10,Q11,Q12 | 2N2924-LFS | 9.000 | EA |
| 69 | 3630076 | XT NS2N3563 .2W600M030V50M2P<br>Q5 | 2N3563 | 1.000 | EA |
| 70 | 3630159 | XT NF2N3819 .4W 025V20M<br>Q4 | 2N3819 | 1.000 | EA |
| 71 | 3630209 | XT PS2N4058 .4W 030V30M<br>Q8 | 2N4058 | 1.000 | EA |
| 72 | 3650041 | RGLTR LM320H12 12V 0.1A TO39<br>U16 | LM320H-12 | 1.000 | EA |
| 73 | 3660008 | IC UA741P OPAMP GEN COMP<br>U3,U4,U7,U12 | UA741CP | 4.000 | EA |
| 74 | 3730173 | IC LM318N OPAMP HISPEED<br>U1,U2,U6,U8,U9,U10,U11 | LM-318N | 7.000 | EA |
| 75 | 3660113 | IC HI1-301-5 1XSPDT RO50 15V<br>U5 | HI1-301-5 | 1.000 | EA |
| 76 | 3660339 | IC SN7493N 4BIT BIN COUNTR<br>U15 | SN7493N | 1.000 | EA |
| 77 | 3660313 | IC SN7490N DEC COUNT DIV/2-5<br>U14 | SN7490AN | 1.000 | EA |
| 78 | 3660065 | IC SN7404N HX INV<br>U13 | SN7404N | 1.000 | EA |

| REF NBR | COMPONENT ITEM NBR | COMPONENT DESCRIPTION & COMMENTS | ENG.DRAWING NO. | QUANTITY PER | UM |
|---|---|---|---|---|---|
| 79 | 4510186 | RES 22.1K OHM 1/8W 1%<br>R9,R27 | RN55D2212F | 2.000 | EA |
| 80 | 4510202 | RES 34.0K OHM 1/8W 1%<br>R10,R28 | RN55C3402F | 2.000 | EA |
| 81 | 1641927 | W BUSS 22GA | 298 | 1.000 | FT |

PARENT ITEM: 9200262



| REF NBR | COMPONENT ITEM NBR | COMPONENT DESCRIPTION & COMMENTS | ENG.DRAWING NO. | QUANTITY PER | UM |
|---|---|---|---|---|---|
| 79 | 4510186 | RES 22.1K OHM 1/8W 1%<br>R9,R27 | RN55D2212F | 2.000 | EA |
| 80 | 4510202 | RES 34.0K OHM 1/8W 1%<br>R10,R28 | RN55C3402F | 2.000 | EA |
| 81 | 1641927 | W BUSS 22GA | 298 | 1.000 | FT |

ITEM NUMBER: 9050956 **** OP S/P SCG-9 STER GEN



DATE 11/20/86

MOSELEY ASSOCIATES, INC.
111 CASTILIAN DRIVE
GOLETA, CA. 93117
(805) 968-9621

KIT NUMBER: SO-72A 08/16/85

| COMPONENT ITEM NO. | MANUFACTURER NUMBER/ ITEM DESCRIPTION | QTY PER |
|---|---|---|
| 3270113 | AZ-530-09-2<br>RELAY MIN PC 200OHM 12V NOM | 1 |
| 4090205 | 3-1067 AO<br>XFMR 8-P-58 | 1 |
| 4260196 | WBR-500-75<br>CAP TB-LYTIC 500/75V | 1 |

ITEM NUMBER: 9050352 **** S/P SCG-9



DATE 11/20/86

MOSELEY ASSOCIATES, INC.
111 CASTILIAN DRIVE
GOLETA, CA. 93117
(805) 968-9621

KIT NUMBER: ST-72A 08/16/85

| COMPONENT ITEM NO. | MANUFACTURER NUMBER/ ITEM DESCRIPTION | QTY PER |
|---|---|---|
| 3390135 | MV-5022<br>LED RED 1.6@20 POINT SOURCE | 1 |
| 3600145 | 1N4154<br>DIO 1N4154 25V 4NS SI D035 | 1 |
| 3600186 | 1N4734A Z5.6A<br>DIO Z1N4734A 5.6V 1W 5% AIAY | 1 |
| 3600202 | 1N4740A Z10.0A<br>DIO Z1N4740A 10V 1W 5% AIAY | 1 |
| 3600228 | 1N4744A<br>DIO Z1N4744A 15V 1W 5% AIAY | 1 |
| 3610003 | 10D2<br>DIO 10D2 200V 1A SI D039 | 4 |
| 3610201 | FSA2620P<br>DIO FSA2620 7-DIODE ARRAY | 1 |
| 3630027 | 2N2924-LF5<br>XT NS2N2924LFS.2W160M025V.1A7P | 1 |
| 3630035 | 2N3053<br>XT NP2N3053 05W100M080V.7A | 1 |
| 3630076 | 2N3563<br>XT NS2N3563 .2W600M030V50M2P | 1 |
| 3630159 | 2N3819<br>XT NF2N3819 .4W 025V20M | 1 |
| 3630209 | 2N4058<br>XT PS2N4058 .4W 030V30M | 1 |
| 3660008 | UA741CP<br>IC UA741P OPAMP GEN COMP | 1 |
| 3660065 | SN7404N<br>IC SN7404N HX INV | 1 |
| 3660313 | SN7490AN<br>IC SN7490N DEC COUNT DIV/2-5 | 1 |
| 3660339 | SN7493N<br>IC SN7493N 4BIT BIN COUNTR | 1 |
| 3730173 | LM-318N<br>IC LM318N OPAMP HISPEED | 1 |

ITEM NUMBER: 9050964 **** OP S/P SCG-9A STER GEN



DATE 11/20/86

MOSELEY ASSOCIATES, INC.
111 CASTILIAN DRIVE
OLETA, CA. 93117
(805) 968-9621

KIT NUMBER: SO-73A 08/16/85

| COMPONENT ITEM NO. | MANUFACTURER NUMBER/ ITEM DESCRIPTION | QTY PER |
|---|---|---|
| 3270113 | AZ-530-09-2<br>RELAY MIN PC 200OHM 12V NOM | 1 |
| 3340114 | 30A0043<br>XTAL 3.04 MHZ SCG-9 | 1 |
| 3370228 | MDL 1/4<br>FUSE 1/4 AMP SLOW-BLO | 5 |
| 3390135 | MV-5022<br>LED RED 1.6@20 POINT SOURCE | 1 |
| 4040176 | 9059<br>IDCTR ADJ RF 1.3-30 MH | 1 |
| 4090205 | 3-1067 AO<br>XFMR 8-P-58 | 1 |
| 4260196 | WBR-500-75<br>CAP TB-LYTIC 500/75V | 2 |

ITEM NUMBER: 9050360 **** S/P SCG-9A



MOSELEY ASSOCIATES, INC.
111 CASTILIAN DRIVE
GOLETA, CA. 93117
(805) 968-9621

DATE 11/20/86

KIT NUMBER: ST-73A 08/16/85

| COMPONENT ITEM NO. | MANUFACTURER NUMBER/ ITEM DESCRIPTION | QTY PER |
|---|---|---|
| 3610003 | 10D2<br>DIO 10D2 200V 1A SI D039 | 4 |
| 3630027 | 2N2924-LF5<br>XT NS2N2924LFS.2W160M025V.1A7P | 2 |
| 3630035 | 2N3053<br>XT NP2N3053 05W100M080V.7A | 2 |
| 3630076 | 2N3563<br>XT NS2N3563 .2W600M030V50M2P | 1 |
| 3630159 | 2N3819<br>XT NF2N3819 .4W 025V20M | 1 |
| 3630191 | 2N4037<br>XT PP2N4037 01W060M060V01A | 1 |
| 3650033 | LM-309K<br>RGLTR LM309K 05V 1.5A TO3 | 1 |
| 3650041 | LM-320-H12<br>RGLTR LM320H12 12V 0.1A TO39 | 1 |
| 3650199 | 7812KC<br>RGLTR UA7812KC 12V 1.5A TO3 | 1 |
| 3660008 | UA741CP<br>IC UA741P OPAMP GEN COMP | 2 |
| 3660065 | SN7404N<br>IC SN7404N HX INV | 1 |
| 3660313 | SN7490AN<br>IC SN7490N DEC COUNT DIV/2-5 | 1 |
| 3660339 | SN7493N<br>IC SN7493N 4BIT BIN COUNTR | 1 |
| 3680113 | DG-301CJ<br>IC DG301CJ 1XSPDT R050 15V | 1 |
| 3730173 | LM-318N<br>IC LM318N OPAMP HISPEED | 2 |

# MOSELEY ASSOCIATES, INC. GENERAL INFORMATION

## CUSTOMER SERVICE INFORMATION

Moseley Associates, Inc. has a Technical Services Department to assist product users who experience difficulties. Our service is available at two levels: telephone consultation and factory service. Different circumstances apply whether the product(s) are under Warranty/Service Agreement or are outside Warranty/Service Agreement status.

Please read the manual; a large portion of telephone calls to Moseley request information which is needed due to nonfamiliarity with the equipment. The majority of those questions are already answered by the Installation/Operation sections of each manual. If these do not help your problem, the first step in any factory service transaction should always be telephone consultation.

### Telephone Consultation

If telephone consultation/assistance is necessary, please have the following information available prior to calling the factory:

A. Model Number and Serial Number of unit,
B. Shipment date or date of purchase of an Extended Service Agreement
C. Suspected Module identification markings,
D. Be prepared to accurately describe the problems with the unit:Constant or intermittent? Precise symptoms? Meter readings? Operational frequency of unit?
E. Factory test data sheets, if applicable.

Once you are prepared with this information, contact our Technical Services Department for assistance. A Technical Services Representative who knows your product(s) is available during normal work hours (8:00 a.m. to 5:00 p.m., Pacific Time, Monday through Friday). Please have patience if the particular representative you should talk to is busy. Leave your name, call letters, equipment type and telephone number(s) where you can be reached in the next few hours. Someone will get back to you as soon as possible.

Please be prepared to keep telephone consultations as short as possible in order to free up the Technical Services Representative to help someone else in trouble. Usually the Technical Services Representative will make suggestions and

recommendations for your next step. After trying these, you may call back if you continue to experience problems.

For telephone assistance call (805)968-9621.

## After Hours Emergency (Only) Telephone Consultation

Emergency service is provided from 5:00 p.m. to 10:00 p.m., Pacific Time, Monday to Friday, and from 8:00 a.m. to 10:00 p.m., Pacific Time, on weekends and holidays. For telephone assistance call (805)968-9621.

This after hours service is for emergencies only. Please do not expect our representative to know the status of your order, to take parts orders or to be equipped to help with installation problems.

## Factory Service

Arrangements for factory service can be made after consultation with the factory Technical Service Representative and his assignment to you of a Return Authorization (R.A.) Number. This number expedites your equipment's routing from the Receiving Department to Technical Services.

When returning your equipment to Moseley Associates, Inc., the following suggestions are offered to assist you. If you are returning a module, ensure that the module is packed sufficiently to withstand the rigors of the journey. Make sure that the shipping carton is packed evenly and fully, with packing material filling all voids so that the module cannot shift inside the shipping carton. The package should also be marked in red with the words "Electronic Equipment" or "Fragile". Remember, the condition of the module is totally dependent on the care taken in the packing. Reference the Return Authorization Number that you had previously obtained from the factory on the outside of the carton or on the shipping label. Make sure that the name of your company is listed on the shipping label, and insure your module appropriately.

If you are shipping a complete chassis, all modules should be tied down as they were originally received. On some Moseley Associates equipment, shipping screws are required on the underside or topside of the chassis.

Include any and all descriptions of the difficulties encountered with your equipment in the field. This will greatly assist us in processing your equipment and returning it as expeditiously as possible.

Use the original shipping carton in which your equipment was supplied, if possible. Ensure that the carton is packed evenly and fully with packing material filling any voids so that the chassis cannot shift inside the carton. Make sure the carton is sealed properly with either nylon-reinforced tape or shipping sealing tape. Mark the outside of the carton "Electronic Equipment - Fragile" in big, red letters. This will assist in the survival of the equipment in the shipping process. Again, bear in mind that the survival of the unit depends almost solely on the preparation taken in shipping it.

When returning your equipment to our factory, please address it to the following:

MOSELEY ASSOCIATES, INC.
Attn: Technical Services Dept.
111 Castilian Drive
Goleta, California 93117

Display your Return Authorization Number clearly on the shipping label, and insure the equipment for the appropriate amount.

All equipment must be shipped prepaid; Moseley Associates, Inc. will return the equipment prepaid under Warranty and Service Agreement conditions, and either freight collect or billed for equipment not covered by Warranty or a Service Agreement.

## GENERAL

### Replacement Modules

Moseley Associates encourages the purchase of recommended spare parts kits to allow the customer to be totally self-sufficient with regard to parts. We recognize that there are extenuating circumstances when troubleshooting to the component level is neither practical nor possible. If this is the case, replacement module exchange may be the most expedient way of correcting the problem. Each product manual lists recommended spares.

Non-frequency sensitive replacement modules are normally available for immediate shipment. If you require a replacement module from Moseley Associates, please give your shipping address to our Technical Services Engineer. If the module or equipment to be supplied to your company is to be held at the airport with a telephone number to call, please provide at least two telephone numbers. This will often expedite the delivery or pickup of the replacement module or equipment.

## Field Repair

Always try to isolate the problem to a specific area or module, if possible. By comparing the actual wave shapes and levels with those referenced on the block and level diagrams or schematics, the problem can often be localized to the component level.

If an integrated circuit is suspect, carefully remove the original and plug in the new one in the same direction. These devices are installed one way only. Plugging in a new device backward may damage the newly installed component or the surrounding circuitry. If a suspect device operates intermittently or appears to drift, Freeze Mist may aid in diagnosing the problem.

If a soldered component has to be removed from a printed circuit board, do the following:

> Use a 40 W soldering iron with a 1/8 inch tip. Do not use a soldering gun. Excessive heat may cause damage!
>
> Remove all the solder contacting the lead or leads from the component and from the associated printed circuit pad. To assist in the removal of the solder, solder-sipping braid, such as solder wick, is very useful. Once the solder has been removed, remove the component from the board.

When installing the new component, pre-bend the leads of the replacement component so that they will easily fit into the appropriate PC board holes. Solder each lead of the component to the bottom side of the board with a 40 W soldering iron with a 1/8 inch tip. Always use a good brand of rosin-core solder. The solder joint should be smooth and shiny. Also, be sure that excessive heat is not used in this soldering operation. Excessive heat will damage the printed circuit pad that comes in contact with the new component. Finally, cut each lead of the replacement component close to the solder on the pad side of the printed circuit board with a pair of diagonal cutters. Then remove all residual flux with either flux cleaner or a cotton swab moistened with flux cleaner.