PRINTING DATE
DECEMBER, 1979

7700 SERIES

STUDIO TRANSMITTER LINK

USER MANUAL WIKI.COM

TIME & FREQUENCY TECHNOLOGY, INC.

3090 Oakmead Village Drive

Santa Clara, CA 95051

(408) 246-63-6365

If You Didn't Get This From My Site,
Then It Was Stolen From...
www.SteamPoweredRadio.Com

TABLE OF CONTENTS

SECTION 1 GENERAL INFORMATION PAGE

1.1 Introduction. 1-1
1.2 Specifications. 1-1
1.2.1 System. 1-1
1.2.2 Transmitter 1-2
1.2.3 Receiver. 1-3
1.2.4 Automatic Changeover. . . . 1-4
1.2.4.1 Transmitter . . . 1-4
1.2.4.2 Receiver. 1-5
1.3 Accessory Equipment 1-5
1.4 Warranty. 1-5
1.5 Claim for Damage in Shipment. 1-6

SECTION 2 INSTALLATION

2.1 Unpacking and Inspection. 2-1
2.2 Preinstallation 2-1
2.2.1 Transmitter 2-1
2.2.2 Receiver. 2-2
2.2.3 Transmitter Automatic Changeover (Optional) . . . 2-2
2.2.4 Receiver Automatic Changeover (Optional) . . . 2-2
2.3 Installation and Connections. 2-3
2.3.1 RF/Antenna. 2-3
2.3.2 Transmitter Audio/Mux . . . 2-4
2.3.3 Receiver Audio/Mux. 2-4
2.3.4 Optional Transmitter Automatic Changeover (TAC) Interconnections. 2-5
2.3.5 Optional Receiver Automatic Changeover (RAC). 2-5
Figure 2-1 Road Map of Removable Cable Assemblies Model 7700
Figure 2-2A Road Map of Adjust Points and Cables Model 7703, Serials 201-253, inclusive.
Figure 2-2B Road Map of Adjust Points and Cables Model 7703, Serial 254 and up.
Figure 2-2C Road Map of Adjust Points and Cables Model 7701, Serial 201-205, inclusive.
Figure 2-2D Road Map of Adjust Points and Cables Model 7701, Serial 206 and up.
Figure 2-2E Balanced Audio, Option 03 of 7771 Wiring.

www.SteamPoweredRadio.Com

TABLE OF CONTENTS (continued) PAGE

Figure 2-3 Composite Transmitter Program and Control Connections
Figure 2-4 Monaural Transmitter Program and Control Connections
Figure 2-5 Dual Monaural Stereo Link Transmitter Program and Control Connections
Figure 2-6 Model 7703 Composite Receiver Program and Multiplex Connections
Figure 2-7 Dual Monaural Stereo Receiver Program and Control Connections
Figure 2-8 Transmitter Automatic Changeover Interconnecting System

SECTION 3 OPERATION

3.1 General System Description 3-1
3.1.1 Transmitter. 3-1
3.1.2 Receiver 3-1
3.1.3 Optional Transmitter Automatic Changeover (TAC) 3-1
3.1.4 Optional Receiver Automatic Changeover (RAC) 3-1
3.2 Controls, Connectors, and Indicators 3-2
3.2.1 Model 7700 Transmitter 3-2
3.2.1.1 Transmitter Front Panel, Figure 3-1 3-2
3.2.1.2 Transmitter Rear Panel, Figure 3-2 3-3
3.2.2 Model 7771 Receiver System Mainframe. 3-4
3.2.2.1 Receiver Front Panel, Figure 3-3. 3-4
3.2.2.2 Receiver Rear Panel, Figure 3-4. 3-4
3.2.3 Transmitter Automatic Changeover (TAC) 3-5
3.2.3.1 TAC Front Panel Figure 3-5. 3-5
3.2.3.2 TAC Rear Panel Input and Outputs, Figure 3-6. 3-6
3.2.4 Receiver Automatic Changeover (RAC). 3-6
3.3 Operating Levels 3-7
3.3.1 Monaural 3-7
3.2.3 Composite. 3-7
3.3.3 Subcarrier 3-7

www.SteamPoweredRadio.Com

TABLE OF CONTENTS (continued) PAGE

SECTION 4 THEORY OF OPERATION

4.1 Block Diagram Discussion . . . . . .
4.1.1 Transmitter. . . . . .
4.1.2 Receiver . . . . . .
4.2 Detailed Circuit Description . . . . . .
4.2.1 Transmitter Circuits . . . . . .
4.2.1.1 Audio and Meter Board (A1) Figure 6-3 . . .
4.2.1.2 A2 Module . . . . . .
4.2.1.3 A3 Module . . . . . .
4.2.1.4 A5 Module . . . . . .
4.2.1.5 A4 Power Supply and Fail Detect Circuit Figure 6-11 . . . . . .
4.2.1.6 (Optional) Model 7770 Transmitter Automatic Changeover (TAC) Figure 6-12 . . . . . .
4.2.2 Receiver Circuits. 4-7
4.2.2.1 A2 Local Oscillator, Figure 6-14 4-7
4.2.2.2 A1 Tuner, Figure 6-13 . . . 4-8
4.2.2.3 A4-2 Monaural Baseband (Model 7701 only, Figure 6-17) 4-8
4.2.2.4 A3 10.7 MHz IF (Model 7703 only) Figure 6-15 4-8
4.2.2.5 A4-1 Stereo Baseband (Model 7703 only), Figure 6-16. 4-9
4.2.2.6 A5 Power Supply and Fail Detect (Figure 6-18). . . . 4-9
4.2.2.7 A7 Audio Metering (Figure 6-19) 4-10
4.2.2.8 (Optional) A8 Receiver Automatic Changeover (RAC) Figure 6-20 4-10

SECTION 5 MAINTENANCE

5.1 General. 5-1
5.2 Access 5-1
5.2.1 Model 7700 STL Transmitter 5-1
5.2.2 Model 7771 STL Receiver Mainframe. . . . . .
5.3 Periodic Maintenance 5-1
5.4 Receiver AGC and Squelch Adjust. 5-22
5.5 Troubleshooting Guide. 5-2
5.5.1 Transmitter Troubleshooting. 5-3

www.SteamPoweredRadio.Com

TABLE OF CONTENTS (continued)

		PAGE
5.5.1.1	No FWD PWR meter reading	5-3
5.5.1.2	Low FWD PWR meter reading	5-7
5.5.1.3	Program Audio Troubleshooting	5-8
5.5.1.4	Multiplex Input Path Troubleshooting	5-8
5.5.1.5	Transmitter Automatic Changeover (TAC) Troubleshooting	5-9
5.5.2	Receiver Troubleshooting	5-11
5.5.2.1	Monaural Receiver Troubleshooting	5-12
5.5.2.2	Composite Receiver Troubleshooting	5-15
5.5.2.3	Receiver Automatic Change-over (RAC) Troubleshooting	5-19

SECTION 6 DIAGRAMS

Fig. No.	Description	Drawing No.
6.1	STL Transmitter Block Diagram	6600-1690
6.2	Block Diagram Model 7703 RCVR	6600-1910
6.2.2	Block Diagram Model 7701 RCVR	6600-2143
6.3	Audio and Meter Amplifier A1 Parts list and PC Bd Assembly	6601-2800 6608-2070
6.4	VCO/Modulator A2A1 Parts list and PC Bd Assembly	6601-2540 6608-2040
6.5	VCO Synthesizer A2A2 Parts list and PC Bd Assembly	6601-2550 6608-2051
6.6	VCXO/Multiplier A2A3 Parts list and PC Bd Assembly	6601-2530 6608-2030
6.7	VCXO/Synthesizer A2A4 Parts list and PC Bd Assembly	6601-2551 6608-2050
6.8	Preamplifier A3A1 Parts list and PC Bd Assembly	6601-2770 6608-2090

If You Didn't Get This From My Site,
Then It Was Stolen From...
www.SteamPoweredRadio.Com

TABLE OF CONTENTS (continued)

Fig. No.	Description	Drawing No.
6.9	RF Doubler Amplifier A3A2	6601-2820
	Parts list and PC Bd Assembly	6608-2170
6.10	Power Amplifier A5	6601-2780
	PC Bd Assembly	6608-2135
	Parts list	6608-2060
6.11	Power Supply and Fail Detector A4	6601-2790
	Parts list and PC Bd Assembly	6608-2080
6.12	Transmitter Model 7770 Transfer System	6601-3230
	Parts list and PC Bd Assembly	6608-3230
6.13	Tuner A1	6601-2240
	Parts list and PC Bd Assembly	6608-1700
	Tuner Bias A1A1	6601-2240
	Parts list and PC Bd Assembly	6608-1701
6.14	Local Oscillator A2	6601-2190
	Parts list and PC Bd Assembly	6608-1690
6.15	10.7 MHz IF A3	6601-2210
	Parts list and PC Bd Assembly	6608-1750
6.16	Baseband, Stereo RCVR	6601-2200
	Parts list and PC Bd Assembly	6608-1760
6.17	10.7 MHz Monaural IF A4-2	6601-3251
	Parts list and PC Bd Assembly	6608-3251
6.18	Power Supply and Fail Detector A5	6601-2160
	Parts list and PC Bd Assembly	6608-1770
6.19	Audio/Metering A7	6601-2220
	Parts list and PC Bd Assembly	6608-1830
6.20	Auto Switching Model 7771-01, A8	6601-2230
	Parts list and PC Bd Assembly	6608-1860
6.21	Mother Board, Receiver	6601-2170
	Parts list and PC Bd Assembly	6608-1780
6.22	Balanced Audio Model 7771-03	6601-3227
	Parts list and PC Bd Assembly	6608-3227

www.SteamPoweredRadio.Com

Section 1

GENERAL INFORMATION

1.1 Introduction

The TFT Model 7700 Studio Transmitter Link (STL) system, when used with the Model 7701-7703 STL Receiver, is designed to provide a more reliable alternative than conventional telephone lines for transferring program material from a studio site to a station broadcast transmitter. The STL system makes it possible to transmit a composite FM stereo signal, consisting of a main and stereo signal plus two subcarriers, over only one link, with an adjustable RF output power of 3.5-12W as desired.

Excellent signal-to-noise ratio, low distortion, and high frequency stability are achieved in the Model 7700 transmitter by the use of direct FM modulation and dual phase-locked loop (PLL) carrier frequency synthesis. To these qualities the Model 7701 or 7703 STL Receiver adds signal selectivity, high gain with low noise, and a unique pulse-counting discriminator circuit which provides excellent phase-linear characteristics for better stereo separation and lower crosstalk than more conventional methods allow. Both receiver modules are crystal frequency controlled superheterodyne units with a sensitivity of less than 2uV for 20 dB quieting.

An optional "hot standby" system is available for both transmitter and receiver. These systems automatically switch to an alternate standby unit if the primary unit fails, assuring a secure and reliable link from studio to transmitter.

The Model 7700 STL design provides the flexibility of five different systems by using combinations of transmitter and receiver modules with available options. This assures each customer of a system best suited to his needs.

1.2 Specifications

1.2.1 System

Frequency Range	940-960 MHz
Baseband Frequency Response (program audio):	
Composite	± 0.1 dB from 50 Hz to 60 kHz + 0.5 dB from 20 Hz to 75 kHz
Monaural	± 0.2 dB from 30 Hz to 15 kHz

www.SteamPoweredRadio.Com

1.2.1 System Specifications (continued)

Harmonic and Intermodulation Distortion (program audio):	
Composite	0.2% at 1 kHz; 0.35% from 30 Hz to 60 kHz
Monaural	0.2% at 1 kHz; 0.3% from 30 Hz to 15 kHz
Signal-to-Noise Ratio (75 usec deemphasis)	70dB
Crosstalk (main to subchannels, subchannels to main)	50 dB from 50 Hz to 15 kHz
Stereo Separation (minimum)	45 dB at 1kHz; 40 dB from 50 Hz to 15 kHz
Modulation Capability	Direct frequency modulation
Composite or Monaural Baseband	± 48 kHz
Multiplex Channel	± 12 kHz
Total System Modulation	± 60 kHz
Operating Temperature	-10°C to 50°C

1.2.2 Transmitter

RF output Power (adjustable)	3.5 to 12 W
Frequency Stability (aging)	1.0 ppm/year
Frequency Accuracy	± 1.0 ppm
Frequency Deviation for 100% Modulation:	
Composite or Monaural	± 48 kHz
Multiplex Channels	± 12 kHz
Preemphasis	75 usec (monaural only)
Harmonic Suppression	-65 dB minimum
Nonharmonically Related Spurious Signals	-65 dB minimum
AM Noise	-65 dB minimum

www.SteamPoweredRadio.Com

1.2.2 Transmitter (continued)

Modulation Inputs:

Monaural	1.24 VRMS, 10 k ohms (balanced)
Composite (BNC)	1.24 VRMS, 10 k ohms (unbalanced)
Multiplex	.053 VRMS, 10 k ohms (unbalanced)
Stereo Separation (80 Hz-15 kHz)	40 dB
Signal-to-Noise Ratio (75 usec deemphasis)	70 dB
Line power	120/240 V AC, 70 W, 50-60 Hz
Temperature Range	$-10^{o}C$ to $50^{o}C$
Dimensions	5.25 in. (13.3cm) by 19 in. (48.3cm) by 13 in. (33cm)
Weight	29 lb (13.1kg)

1.2.3 Receiver

Sensitivity (75 usec deemphasis):

20 dB quieting	2uV monaural; 2uV composite
60 dB Signal-to-Noise	20uV monaural; 40uV composite

Selectivity for:

30 dB Bandwidth	170 kHz monaural; 320 kHz composite
80 dB Bandwidth	1.4 MHz monaural; 2.4 MHz composite
Spurious and Image Rejection	60 dB minimum
Harmonic Distortion (15 Hz to 15 kHz)	0.2%

www.SteamPoweredRadio.Com

1.2.3 Receiver (continued)

Signal-to-Noise Ratio (75 usec deemphasis)	70 dB minimum
AM Noise	55 dB minimum
Crosstalk (main to subchannels)	46 dB minimum
(subchannels to main)	46 dB minimum
Alarm Output	Relay capacity 1 A at 6V DC; 0.5 A at 115 V AC (noninductive load)

Demodulated Outputs/Rear Panel Connectors:

	Composite	Multiplex
Level	1.24 VRMS	0.53 VRMS
Response	30 Hz-75 kHz	110-210 kHz
Impedance	600 ohms	1 k ohms
Type	BNC unbalanced	BNC unbalanced
RF Input	BNC, 50 ohms nominal	
Operating Temperature	-10°C to 50°C	
Dimensions	4-11/23 in. (11cm) by 7-7/16 in. (18.9 cm) by 14-11/16 in. (37.3 cm)	
Weight		

1.2.4 Automatic Changeover

1.2.4.1 Transmitter

RF Input	100 W maximum Type N female connector
Alarm	Positive 50 V maximum sink 250 mA maximum; Barrier strip connections
Transmitter Control	Contact closure 1 A at 26 V DC; SPDT relay; common to both transmitters
Line Power	120/240 V AC, 10W maximum 50-60 Hz
Temperature Range	-10°C to 50°C

www.SteamPoweredRadio.Com

1.2.4.2 Receiver

Control Input	TTL compatible
Direct Current Power	+12V DC, +20V DC (supplied from receiver mainframe)
Temperature Range	$-10^{o}C$ to $50^{o}C$.

1.3 Accessory Equipment

To meet all STL system installation requirements, TFT carries a full line of quality accessories, such as coaxial cable, type "N" connectors, and antennas. Please contact TFT for detailed information about available accessory equipment.

1.4 Warranty

TIME & FREQUENCY TECHNOLOGY, INC. (TFT) warrants each of the instruments of its manufacture to be produced to meet the specifications delivered to the BUYER; and to be free from defects in material and workmanship. TFT will repair or replace at its option, for a period of one year from the date of delivery of equipment, any parts that are defective from faulty material or workmanship.

Instruments found to be defective during the warranty period shall be returned to the factory with transportation charges prepaid by BUYER. It is with respect to any nonconforming equipment and parts thereof and shall be in lieu of any other remedy available by applicable law. All returns to the factory must be authorized by the SELLER, before such returns. Upon examination by the factory, if the instrument is found to be defective, the unit will be repaired and returned to the BUYER, with transportation charges prepaid by SELLER.

Transportation charges for instruments found to be defective within the first thirty (30) days of the warranty period will be paid both ways by the SELLER.

Transportation charges of warranty returns, wherein failure is found not to be the fault of the SELLER, will be paid both ways by the BUYER.

NO OTHER WARRANTY IS EXPRESSED OR IMPLIED. TFT IS NOT LIABLE FOR CONSEQUENTIAL DAMAGES.

www.SteamPoweredRadio.Com

1.5 Claim for Damage in Shipment

Your instrument should be inspected and tested as soon as it is received. The instrument is insured for delivery. If the instrument is damaged in any way, file a claim with the carrier or, if insured separately, with the insurance company.

WE SINCERELY PLEDGE OUR IMMEDIATE AND FULLEST COOPERATION TO ALL USERS OF OUR PRECISION ELECTRONIC INSTRUMENTS.

PLEASE ADVISE US IF WE CAN ASSIST YOU IN ANY MANNER

Time & Frequency Technology
3090 Oakmead Village Dr.
Santa Clara, CA 95051
(408) 246-6365

www.SteamPoweredRadio.Com

Section 2

INSTALLATION

2.1 Unpacking and Inspection

As soon as you receive the equipment, inspect the packing box and equipment for signs of shipping damage. Keep all packing material until performance is confirmed. If the equipment is damaged, file a claim with the transportation company or with the insurance company if the equipment is insured separately.

NOTE

DO NOT REMOVE COVERS FROM THE TRANSMITTER OR RECEIVER CHASSIS. DO NOT ADJUST THE EQUIPMENT IN ANY WAY. DO NOT APPLY POWER UNTIL SPECIFICALLY INSTRUCTED TO DO SO.

2.2 Preinstallation checkout

Test the total system--that is, the STL, the subcarrier generators, and demodulator--on a back-to-back basis before installing the system in its final location. This is important to assure that all equipment interfaces properly before installation.

CAUTION

DO NOT CONNECT THE TRANSMITTER ANTENNA OUTPUT DIRECTLY TO THE RECEIVER ANTENNA INPUT! DOING SO WILL DESTROY THE RECEIVER PREAMPLIFIER!

For back-to-back testing, set the transmitter and receiver next to each other. Terminate the transmitter into a 50 ohm, 15W load and place a wire approximately 12 inches long in the receiver antenna input. The receiver signal level, as indicated on the receiver meter, should be about 100% of scale when testing.

To ensure that the transmitter and receiver function as a system, we recommend the following checkout plan before installation.

2.2.1 Transmitter

CAUTION

TRANSMITTERS MUST BE SEPARATED FROM ANY HEAT PRODUCING EQUIPMENT BY AT LEAST 1 3/4 INCH OF VERTICAL RACK SPACE ON TOP AND BOTTOM.

1. Place the RF POWER ON switch in the STAND-BY position.

If You Didn't Get This From My Site,
Then It Was Stolen From...
www.SteamPoweredRadio.Com

2.2.1 Transmitter (continued)

2. Set the Line Power Input switch-connector (located on the rear of the chassis) to the correct line voltage for available AC service (that is, 120V AC or 240V AC).

3. Connect the line cord to the AC power source. The SYSTEM UNLOCK indicator should extinguish within 60 seconds after AC power is applied.

NOTE

SWITCHES CALLED OUT IN STEPS 4 THROUGH 10 (below) ARE LOCATED ON THE FRONT PANEL.

RECORD THE READINGS OBSERVED IN STEPS 4 THROUGH 10 FOR FUTURE COMPARISON WHEN TESTING EQUIPMENT.

4. Press the PWR SPLY meter switch. The meter will indicate between 40 and 120 on the top scale.

5. Press the VCXO BIAS meter switch. The meter will indicate between 20 and 120 on the top scale.

6. Press the VCO BIAS meter switch. The meter will indicate between 30 and 100 on the top scale.

7. Place the RF POWER ON switch to the RF POWER ON position.

8. Press the FWD PWR meter switch. The meter will indicate approximately 100% on the top scale.

9. Press the REV PWR meter switch. The meter will indicate near 0 on the top scale.

10. Press the MUX SIG meter switch. Without multiplex input signals, the meter will indicate 0 on the top scale.

11. Press the PGRM SIG meter switch. Without program input signals, the meter will indicate 0 on the top scale.

2.2.2 Receiver

The receiver requires no preinstallation tests. Set the line power input switch-connector located on the rear of the chassis for the correct line voltage for available AC service (that is, 120V AC or 240V AC.)

www.SteamPoweredRadio.Com

2.2.3 Transmitter Automatic Changeover (Optional)

The transmitter automatic changeover requires no preinstallation tests. Set the line power input switch-connector located on the rear of the chassis for the correct line voltage for available AC service (that is, 120V AC or 240V AC).

2.2.4 Receiver Automatic Changeover (Optional)

The optional receiver atuomatic changeover module, printed circuit board A8, RF pwer splitter, and associated cables are factory installed in the STL receiver mainframe 7771. No preinstallation testing is required.

2.3 Installation and Connections

2.3.1 RF/Antenna

The following basically different areas need special attention when using the STL Link to replace telephone line interconnections:

The monaural STL has preemphasis incorporated into the transmitter and deemphasis incorporated into the receiver to increase the overall signal-to-noise ratio. The result of preemphasis is the susceptibility to overmodulate at audio frequencies higher than 1 kHz.

T

The monaural system bandwidth is capable of handling a subcarrier for remote control.

The composite STL is capable of simultaneously transmitting composite stereo, secondary programming, and control tones over the single system.

Figures 2-1 and 2-2 show various RF connections that are required for proper operation of the TFT Model 7700 studio transmitter and receiver link. The attenuation (RF loss) between the transmitter RF output and the receiver RF input are of prime importance and need careful attention. The transmitting and receiving antenna should be placed at heights that allow reasonable path clearance. Generally, vertical polarization is used, but either polarization may be used, provided both antennas are in the same place.

To avoid damage to the transmission line--one of the most common problems encountered during STL installation--take care not to twist or bend the lines to ensure that they retain their characteristic impedance. A damaged line will cause poor system performance.

If the reverse power (as indicated on the transmitter) is high, either the RF transmission line, the associated connectors, or the antenna may be at fault. After securing the connectors, have them treated to prevent exposure to moisture. A weather proofing kit is recommended. Also, ground the line at various points as recommended for the particular cable selected by the manufacturer.

www.SteamPoweredRadio.Com

2.3.1 RF/Antenna (continued)

For an STL antenna that is to be mounted on an AM antenna tower (which is typically insulated from ground) install an isocoupler where the line begins its run up the tower. The isocoupler will pass the STL signal efficiently while providing a high impedance for the tower at the AM frequency.

More information on antenna installation and path loss can be found in TFT publication "Studio Transmitter Link Application Guide".

The losses in the antenna transmission line (coaxial cable) used to interconnect the receiver or transmitter to its antenna must be determined and kept to a minimum. Where long runs of line are needed, proper STL performance requires the use of a low loss coaxial cable, available from TFT.

For best performance, it is recommended that the TFT PTL-1 Accessory Kit, with Connector Kit CON-1 or CON-2 (depending on antenna installed) be used for antenna feedlines. Each STL system requires two PTL-1 Accessory Kits, and one CON-1 or one CON-2 Connector Kit. A PTL-1 kit consists of an N-type coaxial connector for installation assembly of RG-8/U coax. The CON-1 is a connector kit for LDF4-50 Heliax, and consists of two type L44N female connectors. The CON-2 connector kit is for LDF5-50 Heliax, and contains two type L45N female connectors.

2.3.2 Transmitter Audio/Mux

The output of the stereo source is applied to the input of a pair of frequency-conscious audio limiters, as shown if Figure 2-3. The limited signals are then applied to a stereo generator. With a composite STL, the output from the stereo generator is applied to the wideband composite input of the transmitter. The "-" side of the balanced input must be tied to ground to operate in the composite mode. The transmitter is set to use multiplex channel 1 for the secondary program source with 0.53 VRMS equal to ±8 kHz deviation. Multiplex channel 2 is set for 0.53 VRMS equal to ±4 kHz deviation.

For a monaural system with remote control and/or secondary program, refer to Figure 2-4. Secondary programming output from a subcarrier generator is connected to channel 1 multiplex input. When using remote control, the receiver subcarrier output is connected to the channel 2 multiplex input. The transmitter is set to use multiplex channel 1 for the secondary program source with 0.53 VRMS equal to ±8 kHz deviation. Multiplex channel 2 is set for 0.53 VRMS equal to ±4 kHz deviation for the remote control subcarrier.

For stereo operation using two monaural STL systems (Figure 2-5), the program source is fed to each transmitter's program input. If secondary programming or remote control is used, choose one RF link for each subcarrier source.

www.SteamPoweredRadio.Com

2.3.3 Receiver Audio/Mux

At the remote site, the 7703 composite receiver is connected as shown in Figure 2-6. The composite output from the receiver is connected directly to the wideband (composite) input of FM exciter. The multiplex outputs are connected to their respective subcarrier demodulators for secondary programming or remote control demodulation.

With a monaural system, the receiver program output is connected to the FM exciter program input.

The dual monaural stereo system, Figure 2-7, requires that the stereo generator be located at the remote site. The outputs of the two 7701 receivers are applied to the left and right inputs of the stereo generator with its output connected to the wideband (composite) input of the FM exciter. The secondary programming is demodulated and applied to the input of the SCA generator and then to the multiplex input of the FM exciter.

When the STL system is installed in the correct operating configuration, a proof of performance test can be conducted.

2.3.4 Optional Transmitter Automatic Changeover (TAC) Interconnections

All necessary interconnecting control and RF cables are supplied with the TAC for connecting it to two STL transmitters. Refer to TAC Interconnecting Block Diagram, Figure 2-8.

Select which STL transmitter will be used as Transmitter No. 1 and which will be Transmitter No. 2. Connect one gray control cable from the Transmitter No. 1 rear panel REMOTE connector to the TAC rear panel XMTR CTL 1 connector. The second gray control cable is then connected from the Transmitter No. 2 rear panel REMOTE connector to the TAC XMTR CTL 2 connector.

Using a flexible cable such as RG-214 (Hard-Line may damage the TAC), connect the antenna feed line to the TAC ANT connector.

Connect one of the two black coaxial cables from the transmitter No. 1 RF POWER OUTPUT connector to the TAC XMTR 1 connector. On Transmitter No. 2, connect the other black coaxial cable from RF POWER OUTPUT to the TAC XMTR 2 connector.

The PROGRAM signal is a common input to both Transmitter No. 1 and Transmitter No. 2 COMP INPUT connectors. These BNC inputs are connected together by coaxial or shielded cable through a BNC Tee, UG274A(not supplied). Similarly, the MUX 1 input of Transmitter No. 1 is connected through a UG 274A BNC Tee to MUX 1 of Transmitter No. 2 and MUX 2 through a Tee to MUX 2.

www.SteamPoweredRadio.Com

2.3.5 Optional Receiver Automatic Changeover (RAC)

The RAC is factory installed in the 7771 receiver mainframe and therefore requires no user interconnection. If remote control is used, connect a normally open momentary action switch between the RMT CMD terminal and the terminal of the rear panel connector. The function of this switch is to switch between the two receivers each time the remote switch is activated.

www.SteamPoweredRadio.Com

NEXT ASSY	USED ON
5004-7700	7700

REVISIONS

SYM	DESCRIPTION	DR	CHK	AUTH	DATE
A	RELEASED FOR PRODUCTION	AC			[illegible]
B	WH/ORN & BLUE TO Q1 WERE REVERSED. REV B EFFECTIVE FOR SERIAL NO. 201 AND UP.	JT	[illegible]	[illegible]	[illegible]

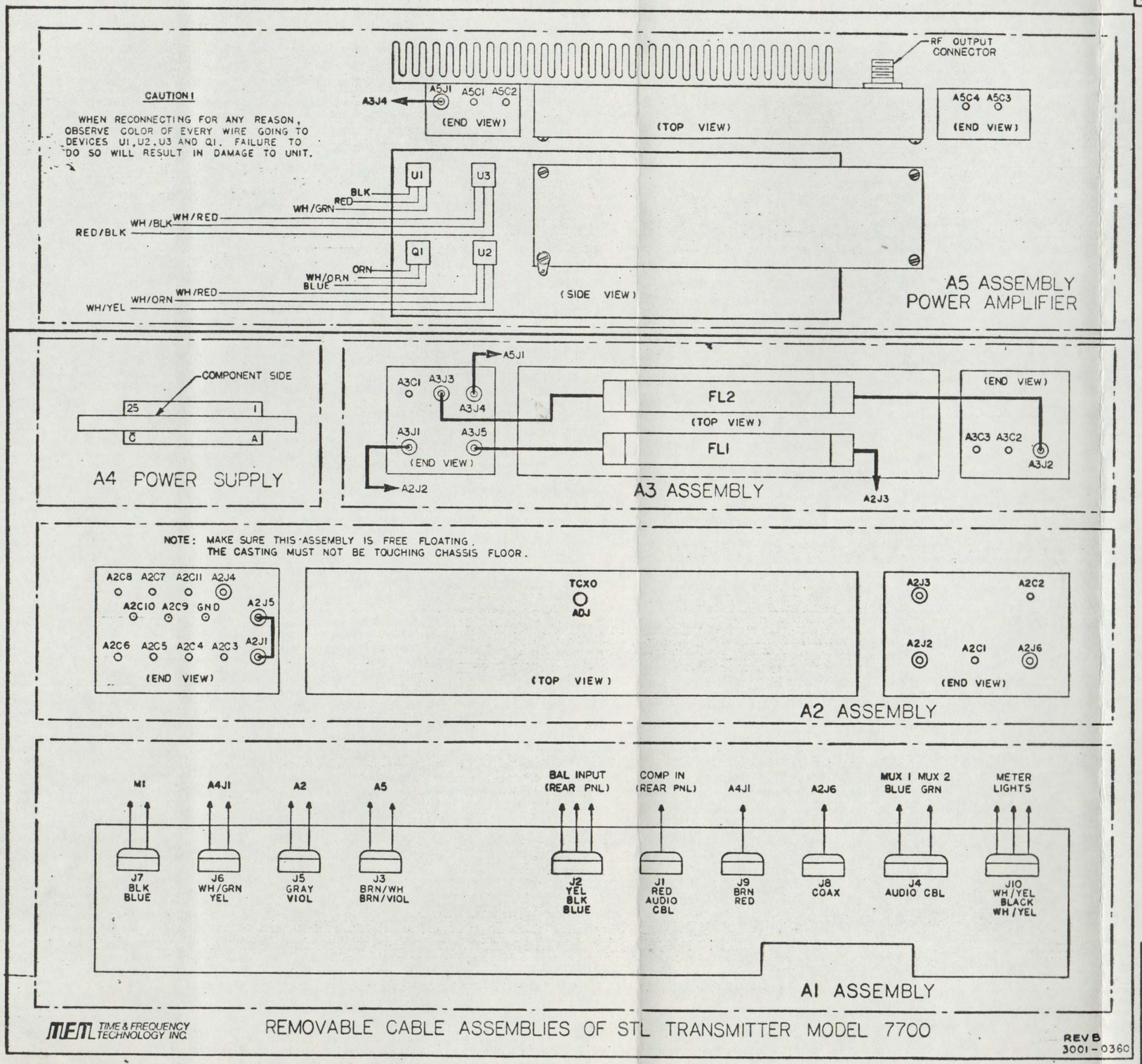

MEM TIME & FREQUENCY TECHNOLOGY INC.

REMOVABLE CABLE ASSEMBLIES OF STL TRANSMITTER MODEL 7700

REV B
3001-0360

FIG 2-1

www.SteamPoweredRadio.Com

QTY PER ASSY	ITEM NO.	EN NO.	PART NO.	DESCRIPTION	REF DES

LIST OF MATERIALS

REMOVE ALL BURRS AND SHARP EDGES

TOLERANCES UNLESS OTHERWISE SPECIFIED
.XX ± ANGULAR
.XXX ± ±

DO NOT SCALE THIS PRINT

DRAWN BY [illegible] DATE 7-7-77
CHK BY [illegible] 7/11/79
PROJ. ENG. [illegible]
MFG. ENG. [illegible] 7-12
APPD.
APPD.
ECO NO

TFT TIME & FREQUENCY TECHNOLOGY INC
3000 Olcott St Santa Clara California 95050
(408) 246-6365

TITLE ROAD MAP OF REMOVABLE CABLE ASSEMBLIES MODEL 7700

SIZE D DRAWING NO 6600-2115 REV B
SCALE NONE SHT 1 OF

© BISHOP GRAPHICS/ACCUPRESS REORDER NO. A-1538

NEXT ASSY	USED ON
5004-7700	7703

REVISIONS

SYM	DESCRIPTION	DR	CHK	AUTH	DATE
A	RELEASED FOR PRODUCTION EFFECTIVE FOR SERIAL NO. 201 TO 253 INCL	KR			11/21/79

* MUTE LEVEL ADJUST PROCEDURE:
1. ADJ AGC LEVEL FOR MINIMUM NOISE.
2. SET METER FUNCTION SWITCH TO RF POSITION RCVR "A" SIDE. ADJ RF LEVEL FOR 100% ON FRONT PANEL METER.
3. ADJ RF SIGNAL INTO ANTENNA INPUT TO 40 MICROVOLTS.
4. SET MUTE SELECT SWITCH TO AUTO (NORMAL) POSITION.
5. SET MUTE LEVEL ADJ FOR THRESHOLD CONDITIONS:
   >40 MICROVOLT RESULTS IN NON-MUTING OF RECEIVER.
   <40 MICROVOLT RESULTS IN MUTING OF RECEIVER.
6. RECEIVER "A" IS NOW SET FOR AUTO SWITCHING AND MUTING.
7. REPEAT FOR RECEIVER B, IF USED.

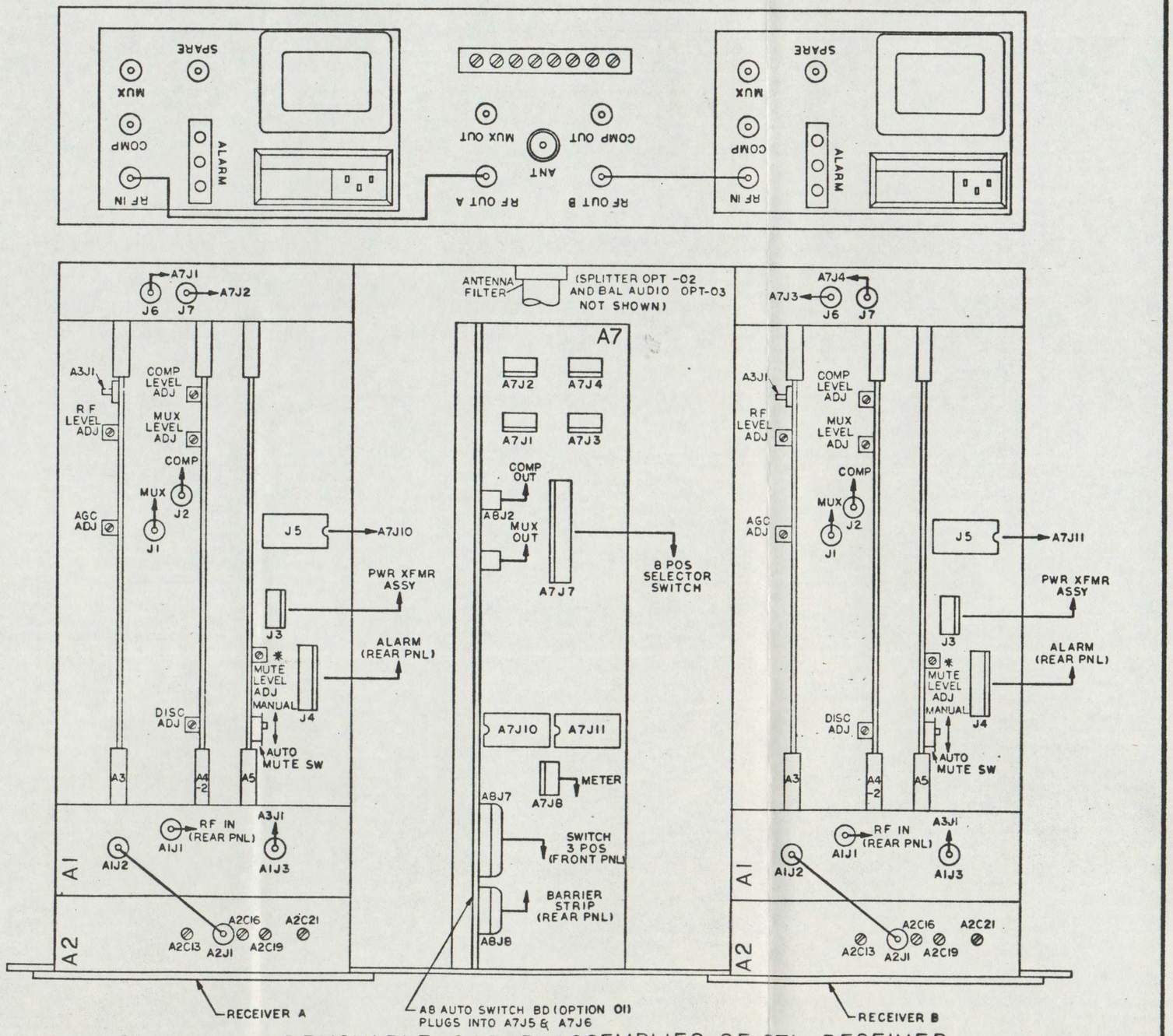

REMOVABLE CABLE ASSEMBLIES OF STL RECEIVER
MODEL 7703

FOR SERIAL NO.
201 - 253 INCL
3001-0390 REV B

FIG. 2-2A

www.SteamPoweredRadio.Com

ITEM NO	EN NO	PART NO	DESCRIPTION	REF DES
QTY PER ASSY			LIST OF MATERIALS	

REMOVE ALL BURRS AND SHARP EDGES

TOLERANCES UNLESS OTHERWISE SPECIFIED
.XX ± ~ ANGULAR
.XXX ± ~ ± ~

DO NOT SCALE THIS PRINT

DRAWN BY K.K. DATE 11-21-79
CHK BY
PROJ ENG
MFG ENG
APPD
APPD
ECO NO

T.F.T. TIME & FREQUENCY TECHNOLOGY INC
3000 Olcott St. Santa Clara California 95050
(408) 246-6365

TITLE ROAD MAP OF ADJ POINTS AND CABLES, MODEL 7703 SERIALS 201-253 INCL.

SIZE D DRAWING NO 6600-2117 REV E
SCALE SHT 1 OF 1

© SHOP GRAPHICS ACCUPRESS REORDER NO. A-1530

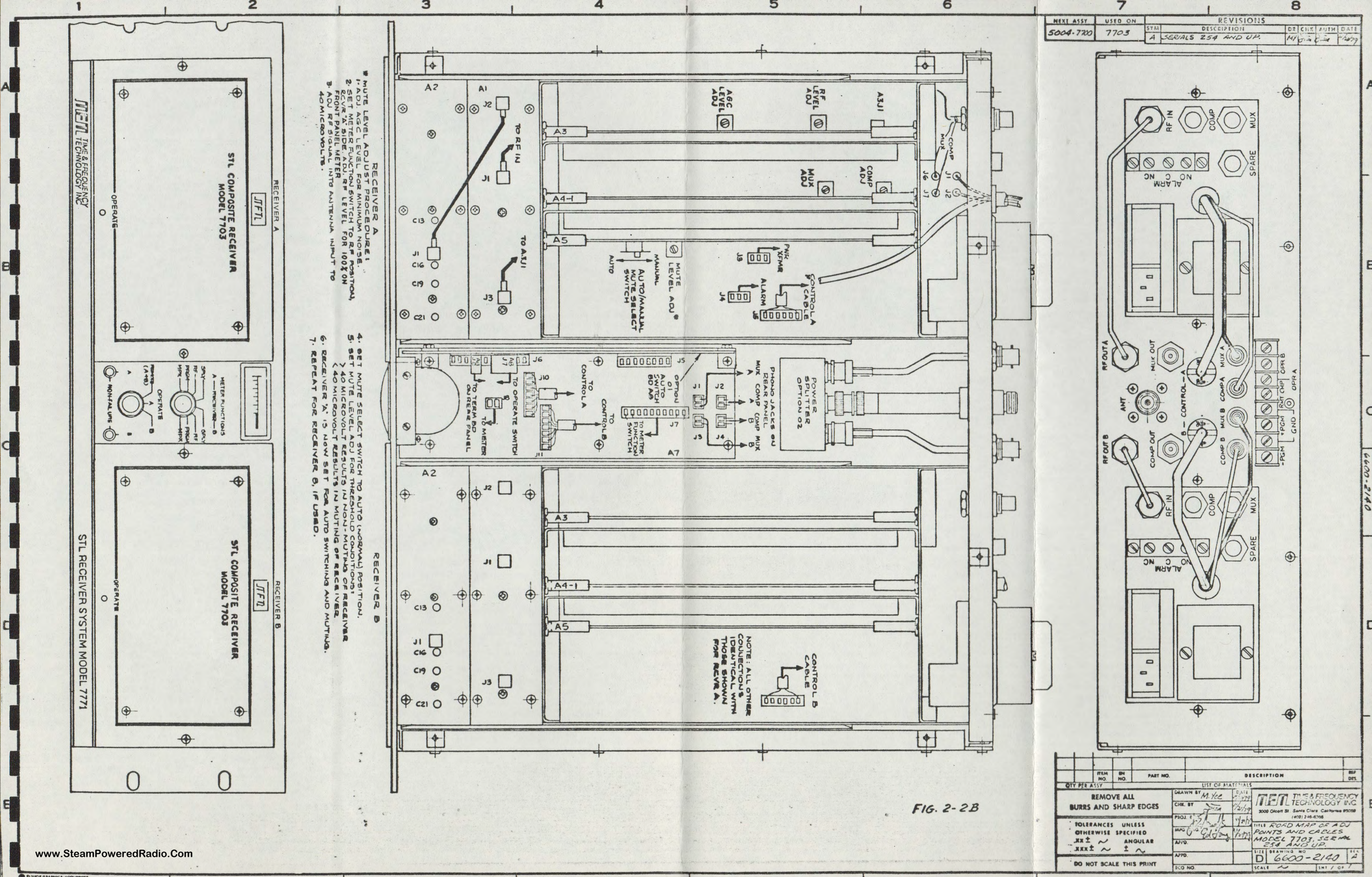

FIG. 2-2B

www.SteamPoweredRadio.Com

QTY PER ASSY	ITEM NO.	EN NO.	PART NO.	DESCRIPTION	REF DES.

LIST OF MATERIALS

REMOVE ALL BURRS AND SHARP EDGES

TOLERANCES UNLESS OTHERWISE SPECIFIED .XX ± ~ ANGULAR .XXX ± ~ ± ~

DO NOT SCALE THIS PRINT

DRAWN BY M. Yee

TIME & FREQUENCY TECHNOLOGY INC. 3000 Olcott St. Santa Clara California 95050 (408) 246-8308

TITLE ROAD MAP OF ADJ POINTS AND CABLES MODEL 7703, SERIAL 254 AND UP.

SIZE D DRAWING NO 6600-2140 REV A

SCALE ~ SHT 1 OF 1

NEXT ASSY	USED ON
5004-7700	7701

REVISIONS

SYM	DESCRIPTION	DR	CHK	AUTH	DATE
A	RELEASED FOR PRODUCTION EFFECTIVE FOR SERIAL NO. 201 TO 205 INCL	KK			11/20/79

* MUTE LEVEL ADJUST PROCEDURE:
1. ADJ AGC LEVEL FOR MINIMUM NOISE.
2. SET METER FUNCTION SWITCH TO RF POSITION RCVR "A" SIDE. ADJ RF LEVEL FOR 100% ON FRONT PANEL METER.
3. ADJ RF SIGNAL INTO ANTENNA INPUT TO 40 MICROVOLTS.
4. SET MUTE SELECT SWITCH TO AUTO (NORMAL) POSITION.
5. SET MUTE LEVEL ADJ FOR THRESHOLD CONDITIONS:
   >40 MICROVOLT RESULTS IN NON-MUTING OF RECEIVER.
   <40 MICROVOLT RESULTS IN MUTING OF RECEIVER.
6. RECEIVER "A" IS NOW SET FOR AUTO SWITCHING AND MUTING.
7. REPEAT FOR RECEIVER B, IF USED.

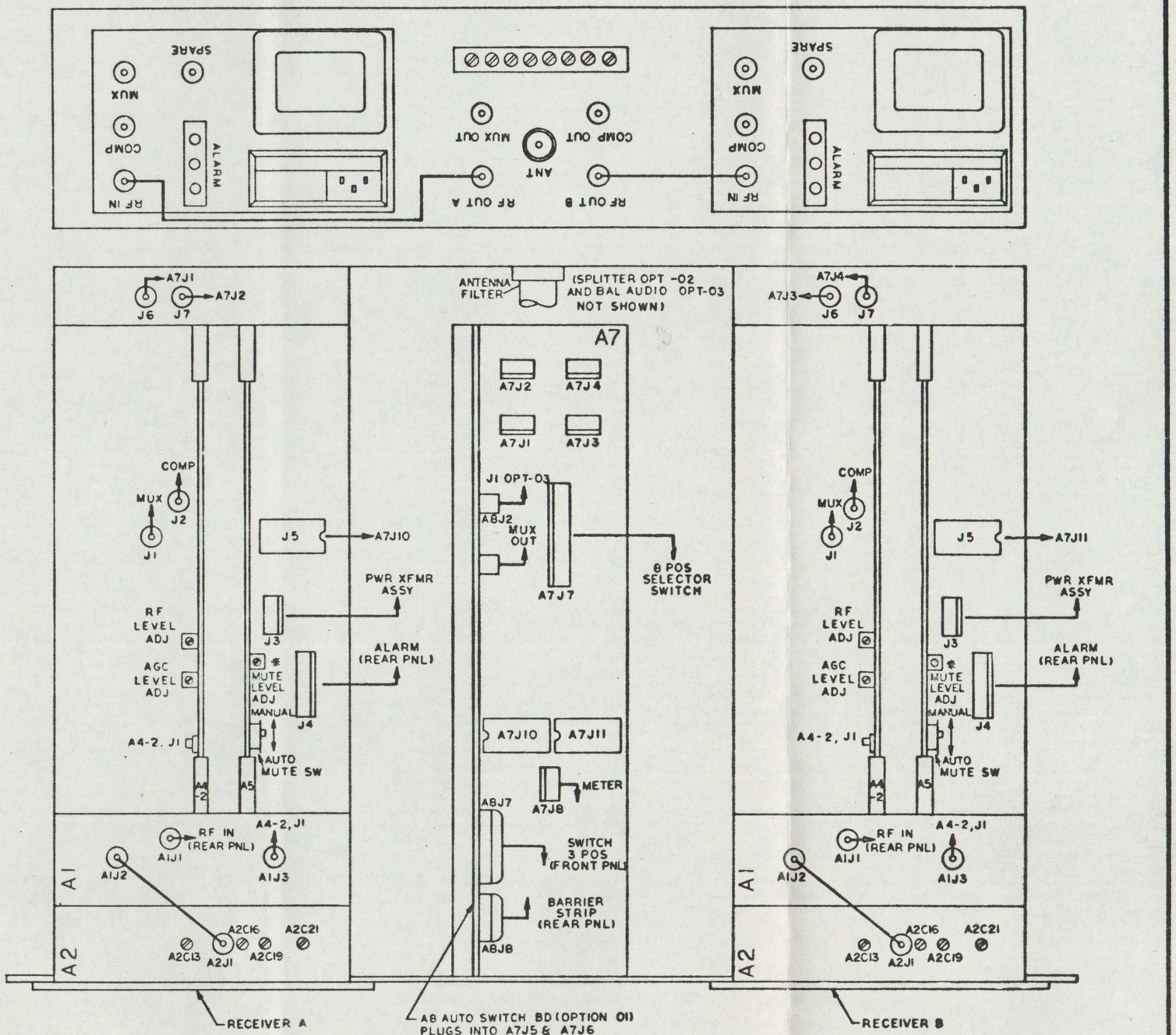

REMOVABLE CABLE ASSEMBLIES OF STL RECEIVER MODEL 7701

3001-0440

FIG 2-2C

If You Didn't Get This From My Site,
Then It Was Stolen From...
www.SteamPoweredRadio.Com

QTY PER ASSY	ITEM NO	SYM NO	PART NO	DESCRIPTION	REF DES

LIST OF MATERIALS

REMOVE ALL BURRS AND SHARP EDGES

TOLERANCES UNLESS OTHERWISE SPECIFIED
.XX ± ~ ANGULAR
.XXX ± ~ ± ~

DO NOT SCALE THIS PRINT

DRAWN BY KK
CHK BY
PROJ ENG
MFG ENG
APPD
APPD
ECO NO

TET TIME & FREQUENCY TECHNOLOGY INC.
3000 Orcott St Santa Clara California 95050
(408) 246-6365

TITLE ROAD MAP OF ADJ POINTS AND CABLES, MODEL 7701 SERIALS 201-205 INCL.

SIZE D DRAWING NO 6600-2139 REV A
SCALE SHT 1 OF 1

NEXT ASSY	USED ON
5004-770	7701

REVISIONS					
SYM	DESCRIPTION	DR	CHK	AUTH	DATE
A	SERIALS 206 AND UP.				

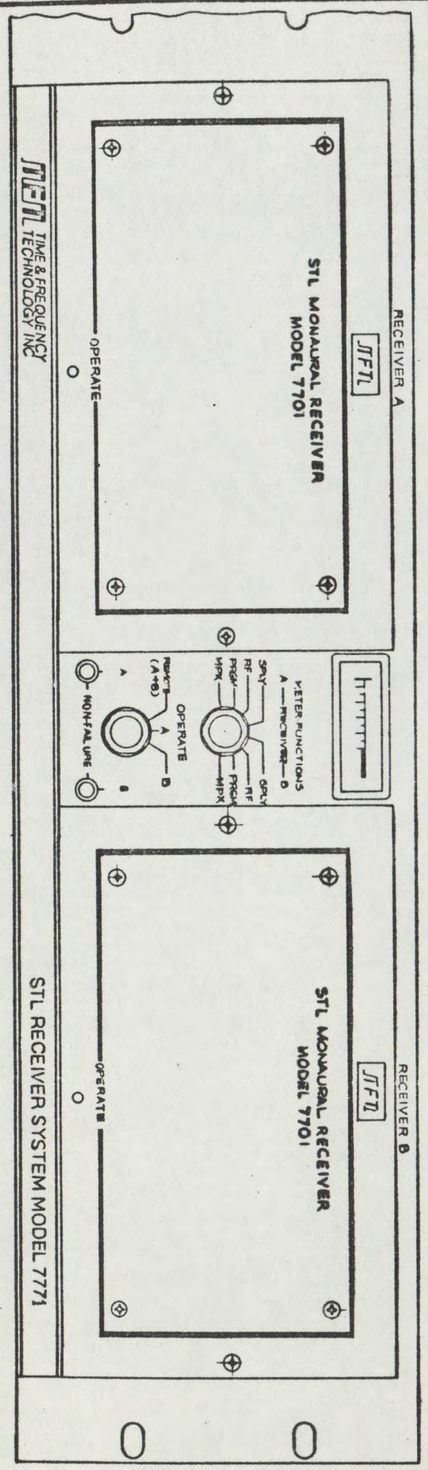

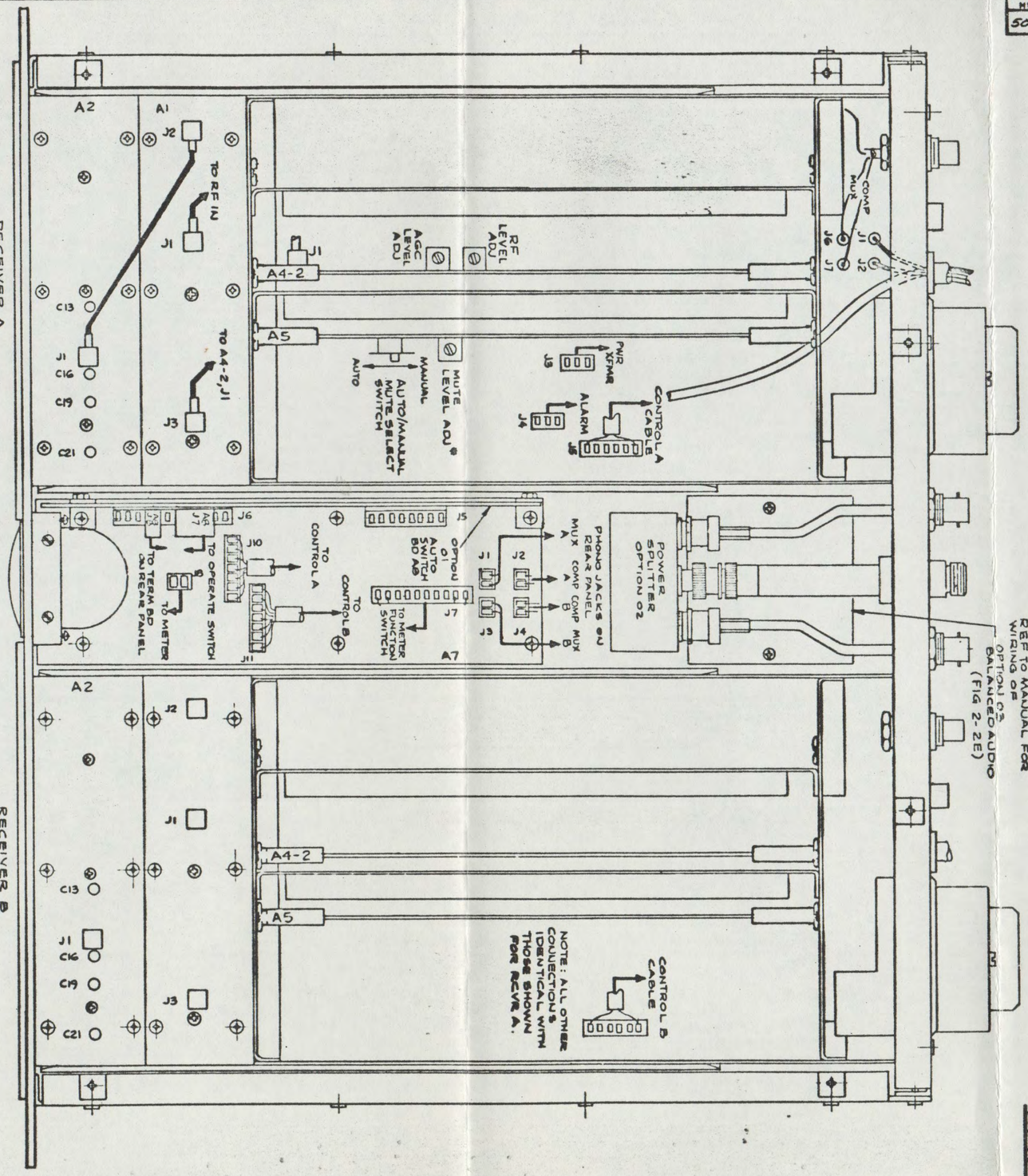

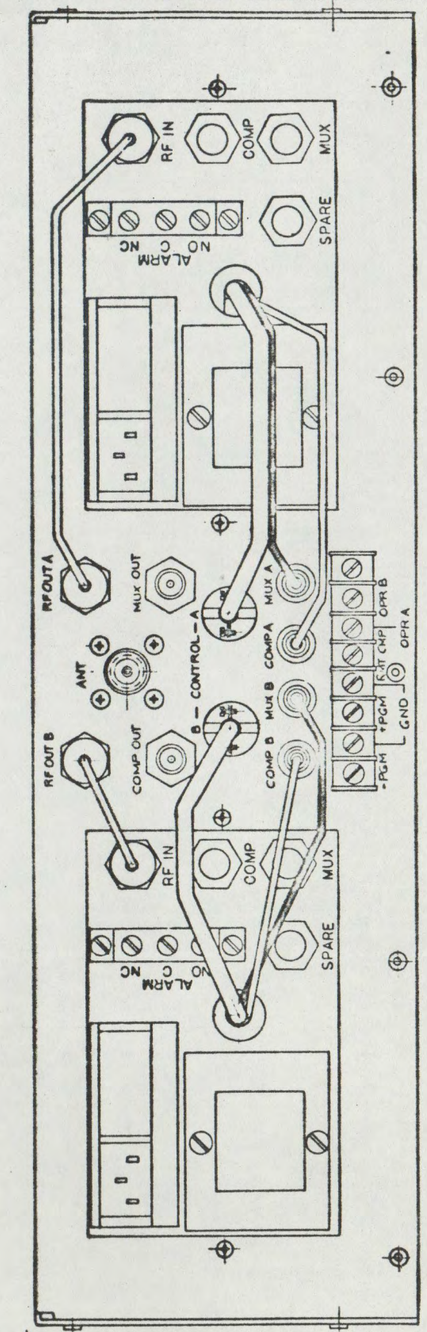

FIG 2-2D

ITEM NO.	SH NO.	PART NO.	DESCRIPTION	REF DES.
QTY PER ASSY			LIST OF MATERIALS	

REMOVE ALL BURRS AND SHARP EDGES

TOLERANCES UNLESS OTHERWISE SPECIFIED
.XX ± ~ ANGULAR
.XXX ± ~ ± ~

DO NOT SCALE THIS PRINT

		DATE
DRAWN BY	M. Yee	7/21/79
CHK. BY		7/21/79
PROJ. E		7/21/79
MFG		7/21/79
APPD.		
APPD.		
ECO NO		

TIME & FREQUENCY TECHNOLOGY INC
3000 Olcott St. Santa Clara, California 95054
(408) 246-6355

TITLE ROAD MAP OF ADJ POINTS AND CABLES MODEL 7701, SERIAL 206 AND UP.

SIZE D | DRAWING NO 6600-2141 | REV A

SCALE ~ | SHT 1 OF 1

6600-2141

www.SteamPoweredRadio.Com

BY SHOP GRAPHICS/ACCUPRESS REORDER NO. 6-1348

NEXT ASSY	USED ON
5102-3299	7771

REVISIONS

SYM	DESCRIPTION	DR	CHK	AUTH	DATE
A	REMOVED SK	KK			11/28/79

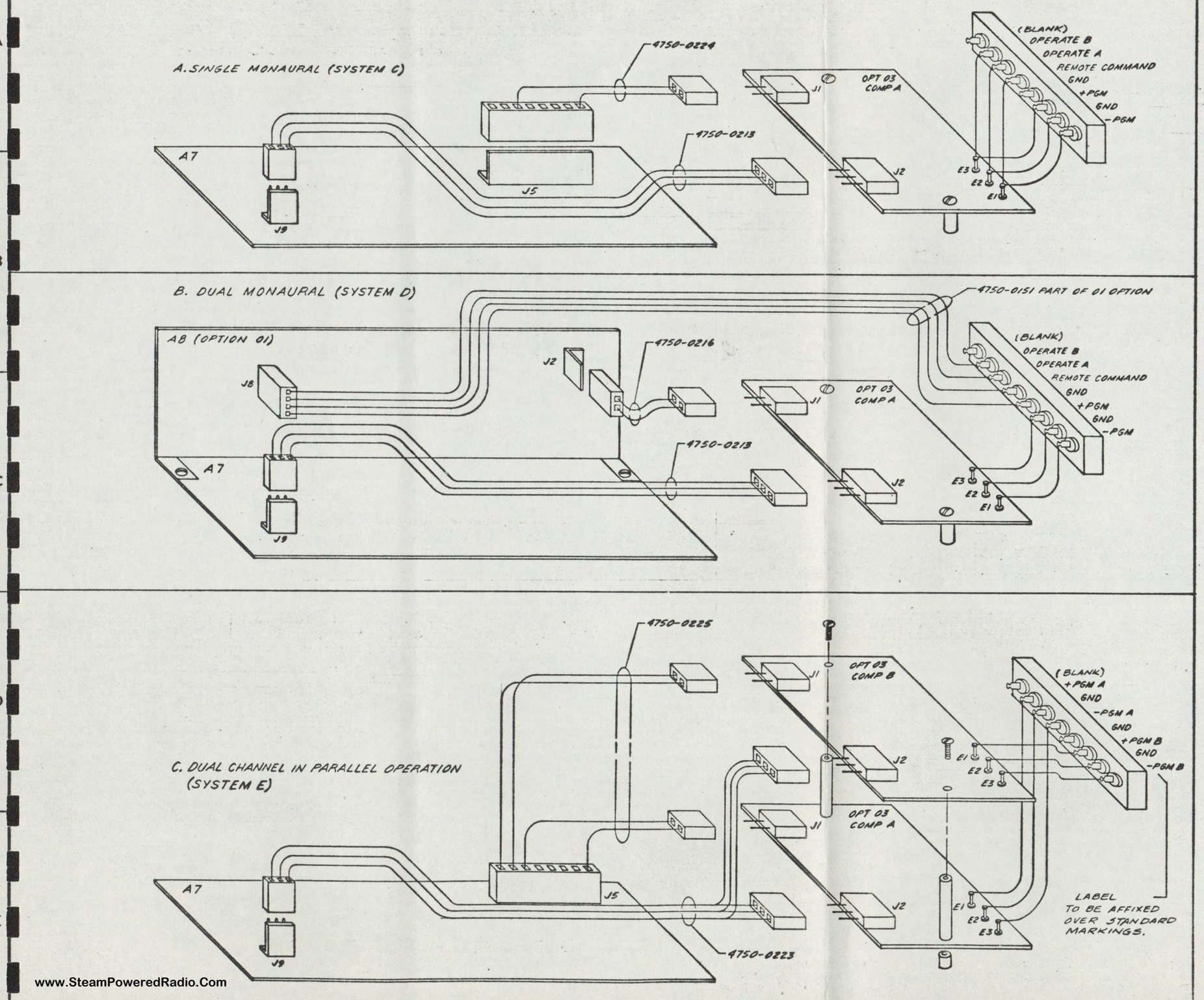

FIG. 2-2E

QTY PER ASSY	ITEM NO	EN NO	PART NO	DESCRIPTION	REF DES

LIST OF MATERIALS

REMOVE ALL BURRS AND SHARP EDGES

TOLERANCES UNLESS OTHERWISE SPECIFIED
.XX ± —
.XXX ± —
ANGULAR ± —

DO NOT SCALE THIS PRINT

DRAWN BY KK DATE 11/28/79
CHK BY Stan 11/28/79
PROJ ENG
MFG ENG
APPD
APPD
ECO NO

TFT TIME & FREQUENCY TECHNOLOGY INC
3000 Olcott St., Santa Clara, California 95050
(408) 246-6365

TITLE OPTION 03, 7771 BALANCED AUDIO WIRING

SIZE D DRAWING NO 6600-2142 REV A
SCALE NONE SHT 1 OF 1

DWG. NO. 6600-2142

www.SteamPoweredRadio.Com

BISHOP GRAPHICS, ACCUPRESS REORDER NO. A-1538

DWG. NO. 6600-2050 SH 1 REV. A

REVISIONS			
REV.	DESCRIPTION	DATE	APPROVED
A	RELEASED FOR PRODUCTION	6-6-79	J Tau

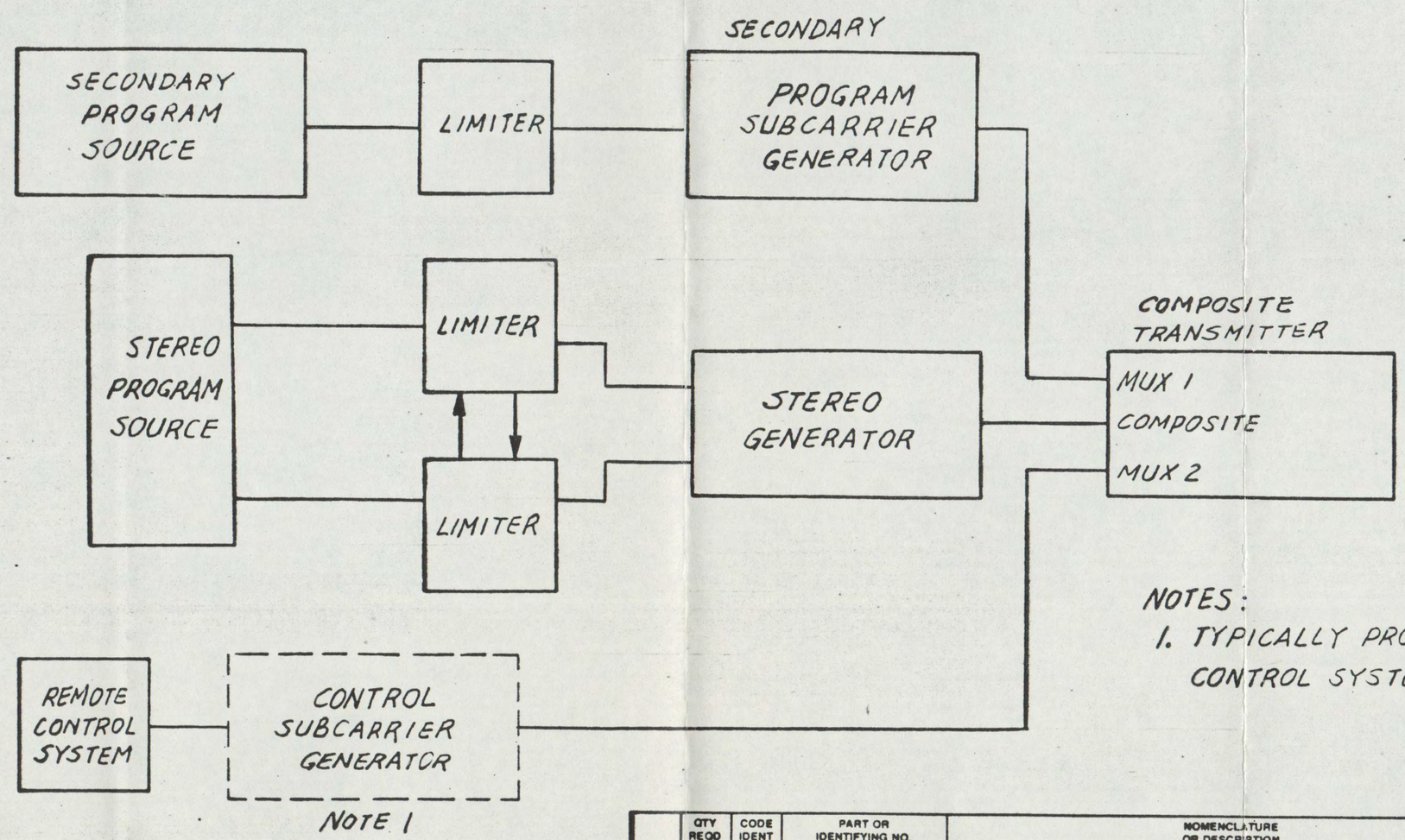

NOTES:
1. TYPICALLY PROVIDED IN REMOTE CONTROL SYSTEM.

	QTY REQD	CODE IDENT	PART OR IDENTIFYING NO.	NOMENCLATURE OR DESCRIPTION	MATERIAL SPECIFICATION	

PARTS LIST

NEXT ASSY	USED ON
APPLICATION	

UNLESS OTHERWISE SPECIFIED DIMENSIONS ARE IN INCHES TOLERANCES ARE:
FRACTIONS ± DECIMALS .XX ± .XXX ± ANGLES ±

MATERIAL

FINISH

DO NOT SCALE DRAWING

CONTRACT NO.

APPROVALS	DATE
DRAWN Anna Shaw	6-5-79
CHECKED J Tau	10/29/79
ISSUED	

MEM TIME & FREQUENCY TECHNOLOGY INC.

FIGURE 2-3
COMPOSITE TRANSMITTER
PROGRAM AND CONTROL CONNECTIONS

SIZE	FSCM NO.	DWG. NO.	REV.
B		6600-2050	A
SCALE		SHEET 1 OF 1	

www.SteamPoweredRadio.Com

BISHOP GRAPHICS/ACCUPRESS
REORDER NO. A-4105

DWG. NO. 6600-2060 SH 1 REV. A

REVISIONS				
REV.		DESCRIPTION	DATE	APPROVED
A	RELEASED	FOR PRODUCTION	6-6-79	[illegible]

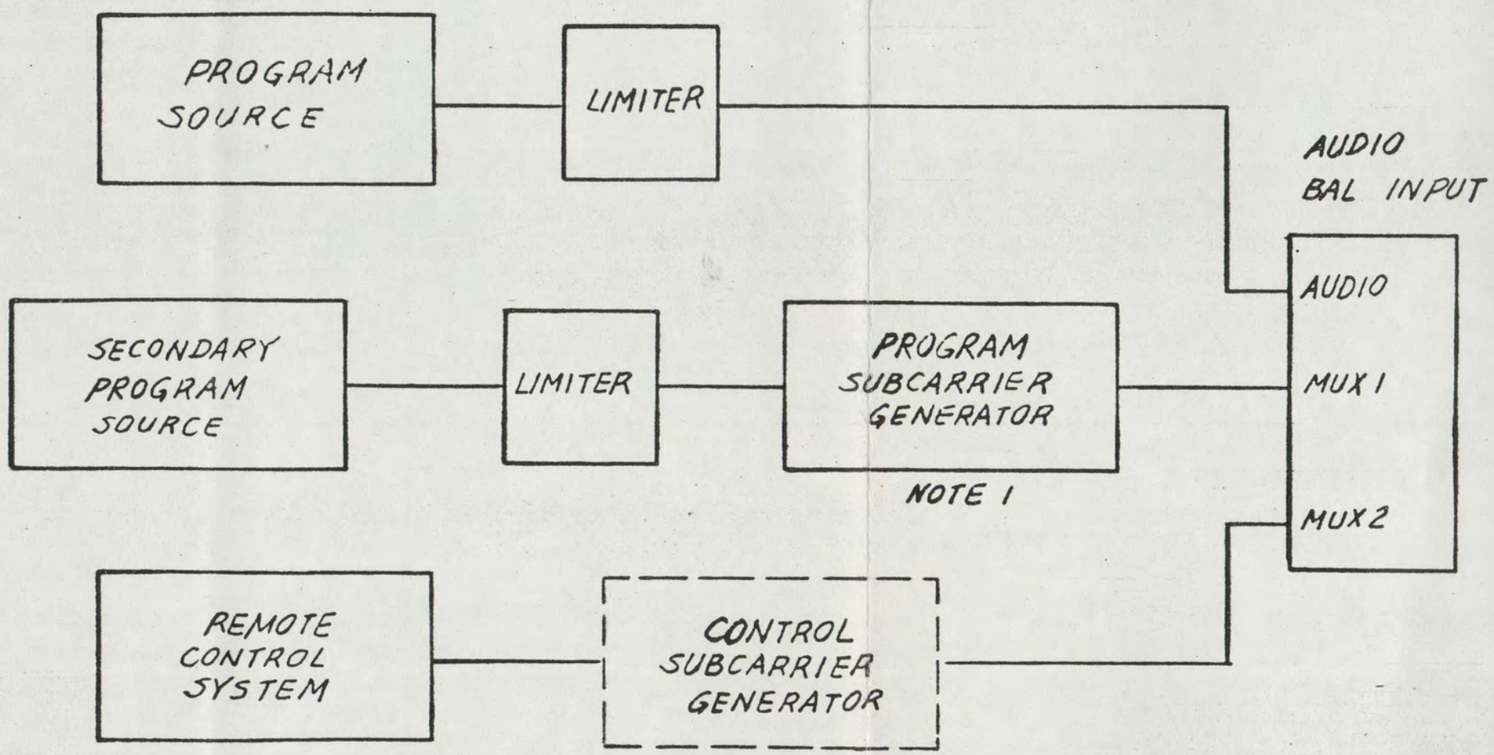

NOTES:

1. TYPICALLY PROVIDED IN REMOTE CONTROL SYSTEM.

	QTY REQD	CODE IDENT	PART OR IDENTIFYING NO.	NOMENCLATURE OR DESCRIPTION	MATERIAL SPECIFICATION	

PARTS LIST

NEXT ASSY	USED ON
APPLICATION	

UNLESS OTHERWISE SPECIFIED DIMENSIONS ARE IN INCHES TOLERANCES ARE:
FRACTIONS ± DECIMALS .XX ± .XXX ± ANGLES ±

MATERIAL

FINISH

DO NOT SCALE DRAWING

CONTRACT NO.

APPROVALS	DATE
DRAWN Anna Chou	6-5-79
CHECKED [illegible]	10/29/79
ISSUED	

MFM TIME & FREQUENCY TECHNOLOGY INC.

FIGURE 2-4
MONAURAL TRANSMITTER
PROGRAM AND CONTROL CONNECTIONS

SIZE	FSCM NO.	DWG. NO.	REV.
B		6600-2060	A

SCALE SHEET 1 OF 1

www.SteamPoweredRadio.Com

BISHOP GRAPHICS/ACCUPRESS
REORDER NO. A-4105

DWG. NO. 6600-2070 SH 1 REV. A

REVISIONS			
REV.	DESCRIPTION	DATE	APPROVED
A	RELEASED FOR PRODUCTION	6-6-79	[illegible]

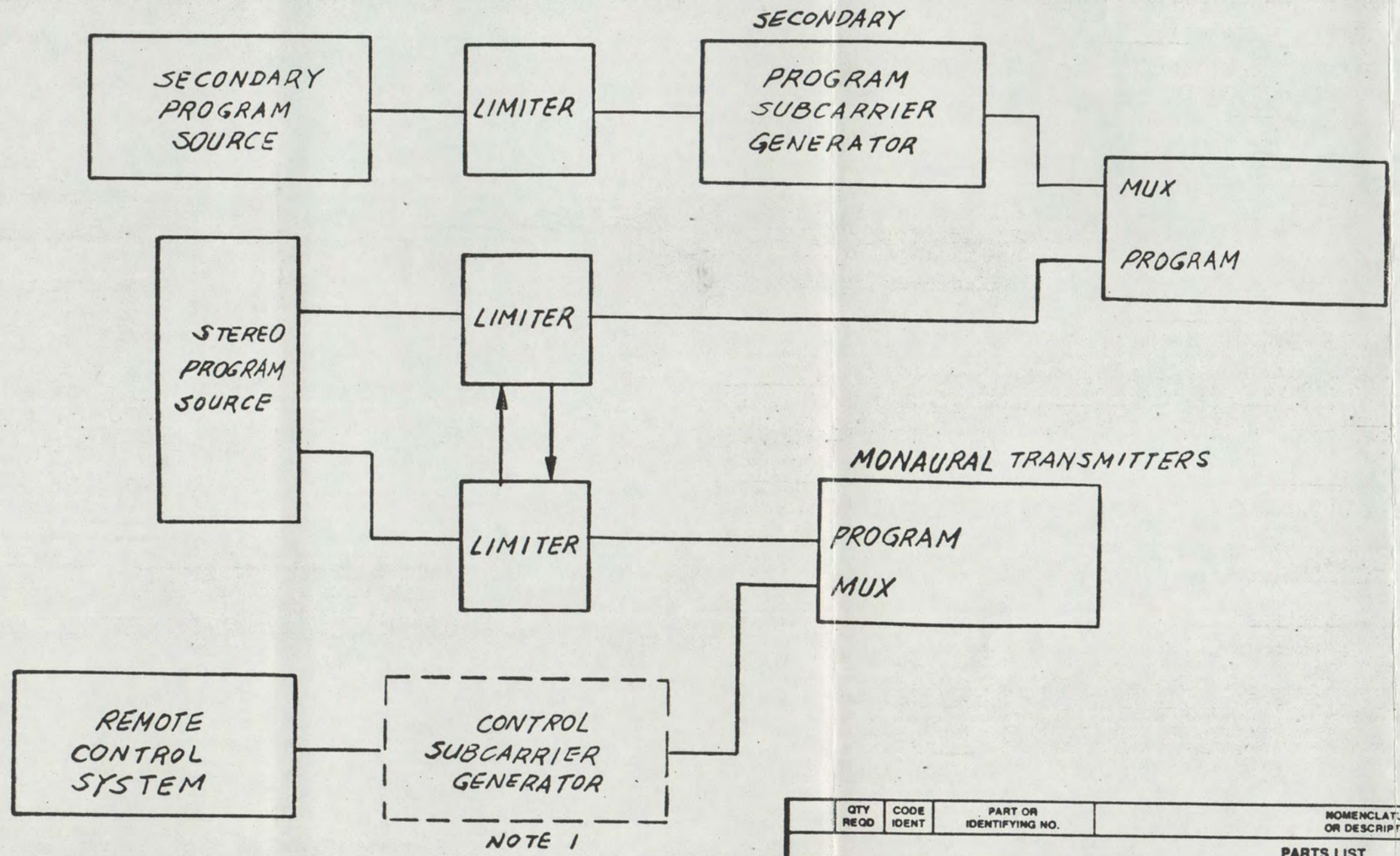

NOTES:
1. TYPICALLY PROVIDED IN REMOTE CONTROL SYSTEM.

	QTY REQD	CODE IDENT	PART OR IDENTIFYING NO.	NOMENCLATURE OR DESCRIPTION	MATERIAL SPECIFICATION

PARTS LIST

NEXT ASSY	USED ON

APPLICATION

UNLESS OTHERWISE SPECIFIED DIMENSIONS ARE IN INCHES
TOLERANCES ARE:
FRACTIONS ± DECIMALS .XX ± .XXX ± ANGLES ±

MATERIAL

FINISH

DO NOT SCALE DRAWING

CONTRACT NO.

APPROVALS	DATE
DRAWN Anna Chou	6-5-79
CHECKED [illegible]	6/29/79
ISSUED	

MEM TIME & FREQUENCY TECHNOLOGY INC.

FIGURE 2-5
DUAL MONAURAL STEREO LINK TRANSMITTER PROGRAM AND CONTROL CONNECTIONS

SIZE B | FSCM NO. | DWG. NO. 6600-2070 | REV. A

SCALE | SHEET 1 OF 1

If You Didn't Get This From My Site,
Then It Was Stolen From...
www.SteamPoweredRadio.Com

BISHOP GRAPHICS/ACCUPRESS
REORDER NO. A-4105

DWG. NO. 6600-2080 SH 1 REV. A

REVISIONS			
REV.	DESCRIPTION	DATE	APPROVED
A	RELEASED FOR PRODUCTION	6-6-79	Tau

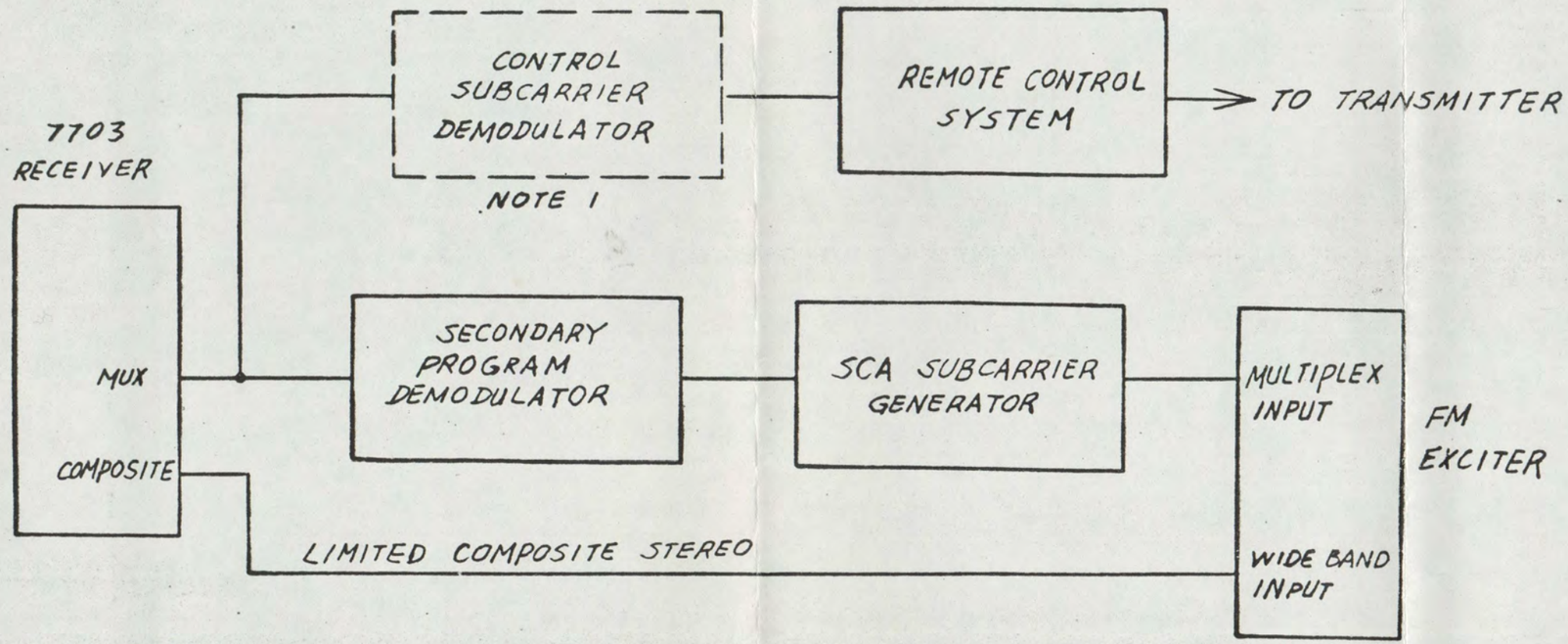

NOTES:

1. TYPICALLY PROVIDED IN REMOTE CONTROL SYSTEM.

	QTY REQD	CODE IDENT	PART OR IDENTIFYING NO.	NOMENCLATURE OR DESCRIPTION	MATERIAL SPECIFICATION	

PARTS LIST

UNLESS OTHERWISE SPECIFIED DIMENSIONS ARE IN INCHES
TOLERANCES ARE:
FRACTIONS ± DECIMALS .XX ± .XXX ± ANGLES ±

MATERIAL

FINISH

DO NOT SCALE DRAWING

CONTRACT NO.

APPROVALS	DATE
DRAWN Anna Chou	6-5-79
CHECKED Tau	10/29/79
ISSUED	

MFM TIME & FREQUENCY TECHNOLOGY INC.

FIGURE 2-6 Model 7703
COMPOSITE RECEIVER
PROGRAM AND MULTIPLEX CONNECTIONS

SIZE B | FSCM NO. | DWG. NO. 6600-2080 | REV. A

SCALE | SHEET 1 OF 1

NEXT ASSY	USED ON

APPLICATION

www.SteamPoweredRadio.Com

BISHOP GRAPHICS/ACCUPRESS
REORDER NO. A-4105

DWG. NO. 6600-2090 SH 1 REV. A

REVISIONS			
REV.	DESCRIPTION	DATE	APPROVED
A	RELEASED FOR PRODUCTION	6-6-79	Flau

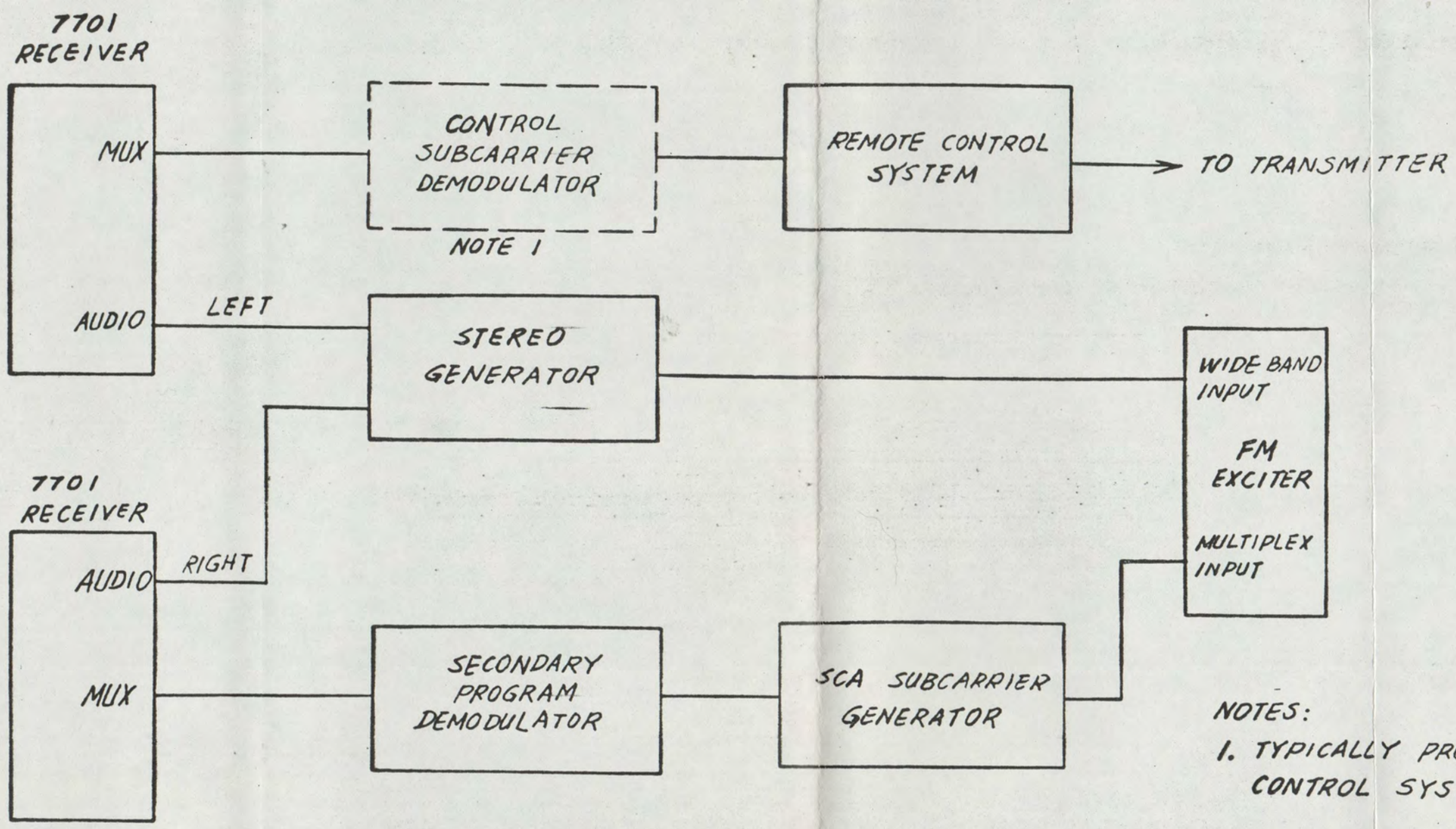

NOTES:

1. TYPICALLY PROVIDED IN REMOTE CONTROL SYSTEM.

	QTY REQD	CODE IDENT	PART OR IDENTIFYING NO.	NOMENCLATURE OR DESCRIPTION	MATERIAL SPECIFICATION	

PARTS LIST

NEXT ASSY	USED ON

APPLICATION

UNLESS OTHERWISE SPECIFIED DIMENSIONS ARE IN INCHES TOLERANCES ARE:
FRACTIONS ± DECIMALS .XX ± .XXX ± ANGLES ±

MATERIAL

FINISH

DO NOT SCALE DRAWING

CONTRACT NO.

APPROVALS	DATE
DRAWN Anna Chow	6-5-79
CHECKED Flau	10/29/79
ISSUED	

MFM TIME & FREQUENCY TECHNOLOGY INC.

FIGURE 2-7
DUAL MONAURAL STEREO RECEIVER
PROGRAM AND CONTROL CONNECTIONS

SIZE B | FSCM NO. | DWG. NO. 6600-2090 | REV. A

SCALE | SHEET 1 OF 1

www.SteamPoweredRadio.Com

BISHOP GRAPHICS/ACCUPRESS
REORDER NO. A-4105

DWG. NO. 6600-2100 SH 1 REV. A

REVISIONS			
REV.	DESCRIPTION	DATE	APPROVED
A	RELEASED FOR PRODUCTION	6-6-79	

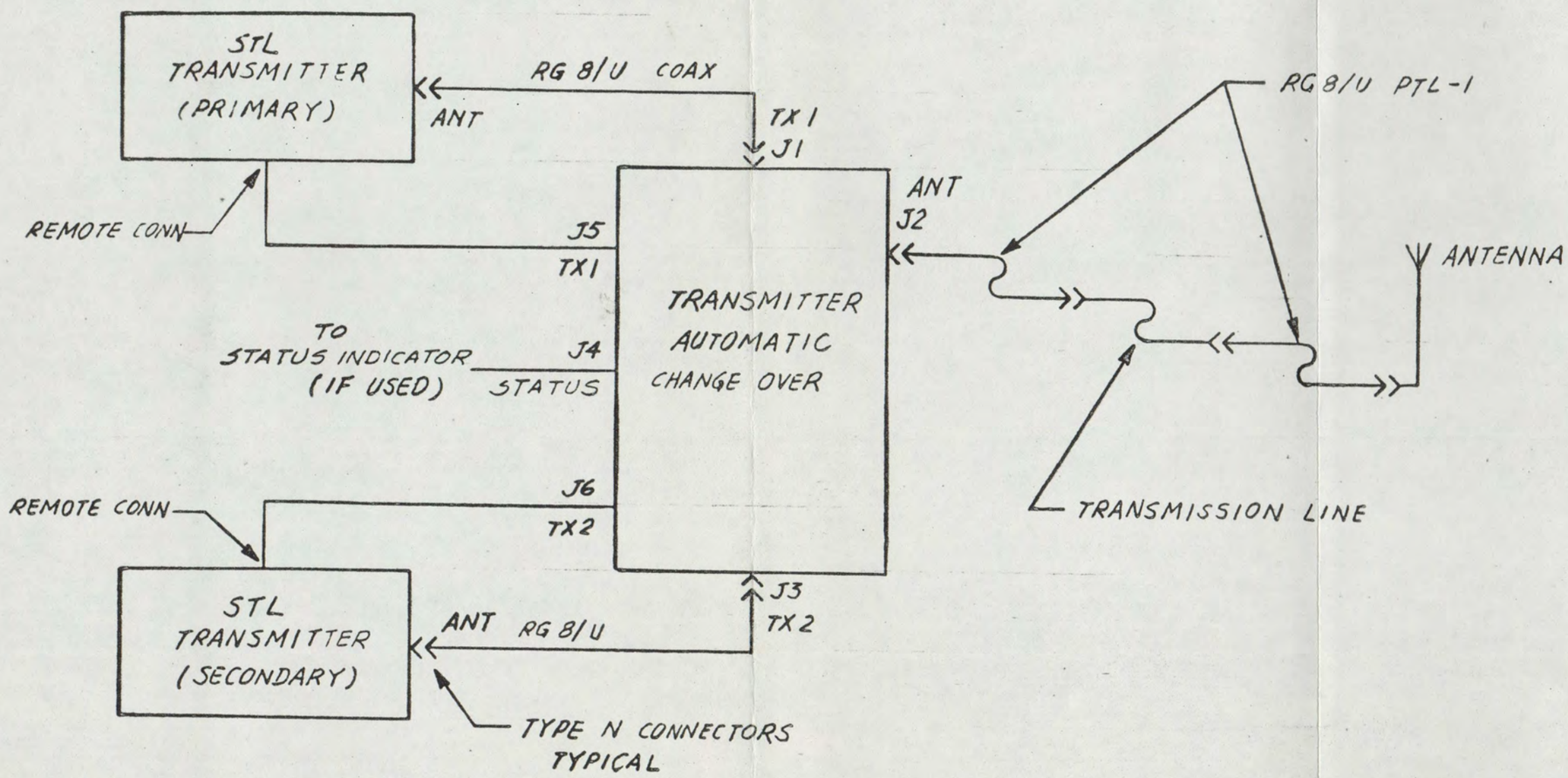

	QTY REQD	CODE IDENT	PART OR IDENTIFYING NO.	NOMENCLATURE OR DESCRIPTION	MATERIAL SPECIFICATION

PARTS LIST

NEXT ASSY	USED ON

APPLICATION

UNLESS OTHERWISE SPECIFIED DIMENSIONS ARE IN INCHES TOLERANCES ARE:
FRACTIONS ± DECIMALS .XX ± .XXX ± ANGLES ±

MATERIAL

FINISH

DO NOT SCALE DRAWING

CONTRACT NO.

APPROVALS	DATE
DRAWN Anna Chou	6-6-79
CHECKED	10/29/79
ISSUED	

MFM TIME & FREQUENCY TECHNOLOGY INC.

FIGURE 2-8
TRANSMITTER AUTOMATIC CHANGE OVER INTERCONNECTING SYSTEM

SIZE	FSCM NO.	DWG. NO.	REV.
B		6600-2100	A

SCALE SHEET 1 OF 1

www.SteamPoweredRadio.Com

BISHOP GRAPHICS/ACCUPRESS REORDER NO. A-4105

Section 3

OPERATION

3.1 General System Description

The Series 7700 transmitter and receiver system provides an alternative to conventional telephone lines for linking the studio to the broadcast transmitter. This section describes the Model 7700 transmitter, Model 7771 receiver, and optional transmitter and receiver automatic changeovers in general, lists their panel switches and meter functions (Section 3.2), and provides operational suggestions (Section 3.3).

3.1.1 Transmitter

The Model 7700 transmitter is a dual phase-locked loop superheterodyne unit consisting of nine printed circuit boards, several of which are modularly enclosed for shielding. Two LED indicators on the front panel indicate RF power-on and system unlock. A meter and meter function switching are provided for monitoring and testing input signal modulation, forward RF power to antenna, reflected RF power and internal PLL functions.

3.1.2 Receiver

The Model 7703 and 7701 receiver module is a highly sensitive, stable, superheterodyne unit consisting of plug-in printed circuit boards and two plug-in assemblies. The module houses the RF preamplifier, first mixer, first IF, second local oscillator and mixer, and first local oscillator and multiplier. The Model 7703 and 7701 receivers are designed to operate in the TFT Model 7771 system mainframe. The receiver mainframe chassis holds switches, indicators, and meter for monitoring and testing. It also holds the optional Receiver Automatic Changeover printed circuit board Power Splitter for parallel operation of dual receivers and Balanced Audio output for monaural systems.

3.1.3 Optional Transmitter Automatic Changeover (TAC)

The optional TAC Model 7770, requires the use of a second transmitter that is electrically held in a standby state. The TAC receives a logic command signal from the operating transmitter indicating the presence of RF output power. If the RF output power drops below a metered level, the TAC automatically switches to the standby transmitter.

3.1.4 Optional Receiver Automatic Changeover (RAC), Option 01

The RAC is a plug-in circuit card that plugs into the audio and meter board on the receiver mainframe chassis. The mainframe chassis also holds the required second receiver module.

www.SteamPoweredRadio.Com

3.1.5 Optional Power Splitter, Option 02

The use of Power Splitter 02 is required when a second receiver module is used as a hot standby or for parallel monaural operation. The power splitter connects to the antenna filter and feeds the individual receiver modules by means of externally connected cables.

3.1.6 Optional Balanced Audio Output, Option 03 (Monaural Only)

Option 03 is available for monaural installations requiring a balanced audio output at +10 dBm. Two of these units are required for dual channel parallel operation. A complete set of cables is furnished for field installation when this option is ordered. This option is mounted on the receiver main frame.

3.2 Controls, Connectors, and Indicators

This section presents block diagrams of Model 7700 transmitter front and rear panels (Figures 3-1 and Models 7701 and 7703 transmitter automatic changeover front and rear panels (Figures 3-5 and 3-6). The receiver automatic changeover is briefly mentioned. Its control panel functions and designations are indicated in Figure 3-3.

Subsections 3.2.1 through 3.2.4 list each unit's control panel indicators with reference to the appropriate block diagram, and list their function.

3.2.1 Model 7700 Transmitter

3.2.1.1 Transmitter Front Panel, Figure 3-1

Reference	Panel Indicator	Function
1	SYSTEM UNLOCKED	LED indicates a failure in the phase-locked loop (PLL) circuitry
2	RF PWR ON & STANDBY	When on, LED indicates that the RF power switch is ON, and the transmitter is radiating.
3	PWR SPLY	Monitors power supply voltage to final power amplifier stage.
4	VCXO BIAS	Monitors VCXO tuning voltage from PLL circuitry
5	VCO BIAS	Monitors VCO tuning voltage from PLL circuitry

www.SteamPoweredRadio.Com

NEXT ASSY	USED ON
5004-7770	7700

REVISIONS					
SYM	DESCRIPTION	DR	CHK	AUTH	DATE
A	EFFECTIVE SERIAL NO. 201 AND UP				

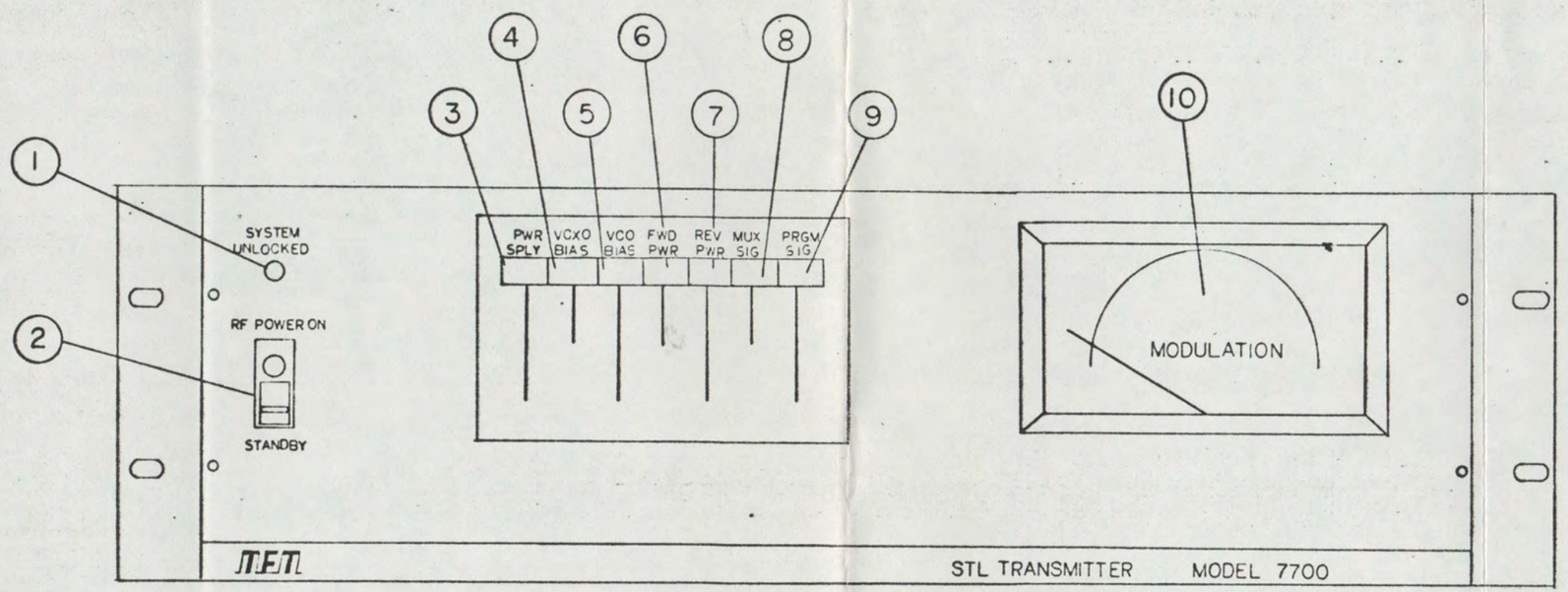

FIG 3-1

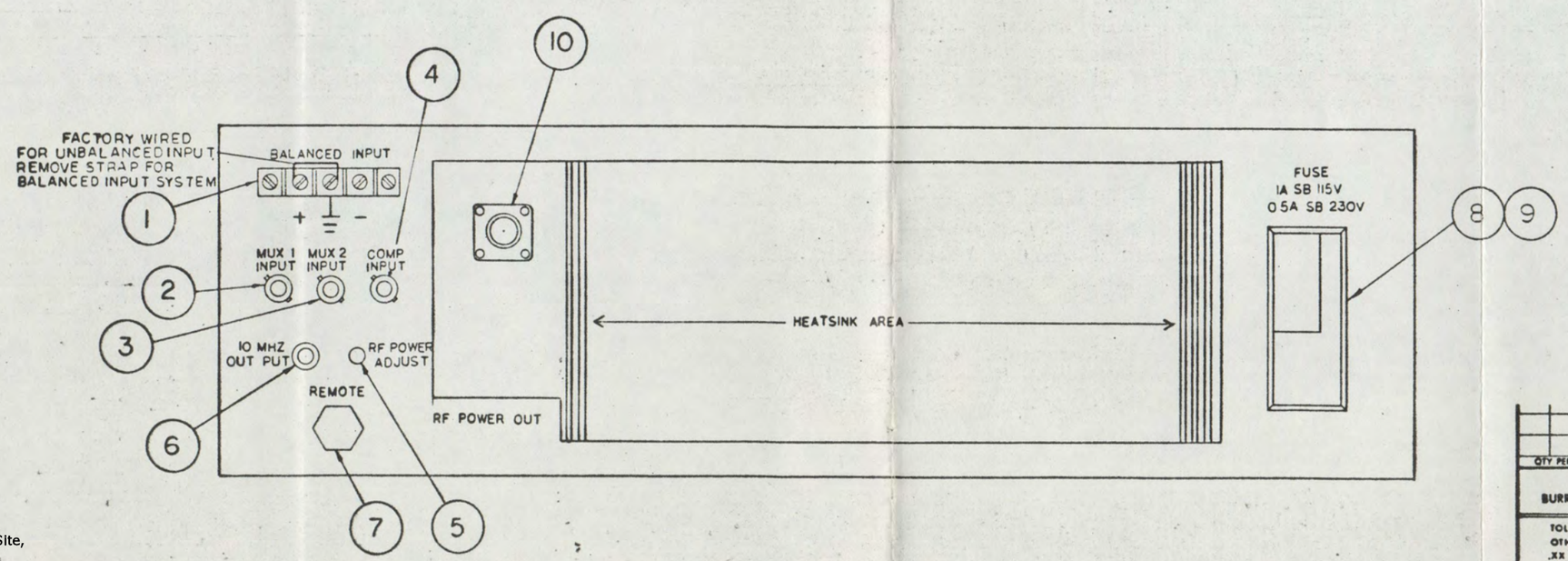

FIG 3-2

QTY PER ASSY	ITEM NO	BM NO	PART NO	DESCRIPTION	REF DES

LIST OF MATERIALS

REMOVE ALL BURRS AND SHARP EDGES

TOLERANCES UNLESS OTHERWISE SPECIFIED
.XX ± ANGULAR
.XXX ± ±

DO NOT SCALE THIS PRINT

		DATE
DRAWN BY		
CHK BY		
PROJ ENG		
MFG ENG		
APPD		
APPD		
ECO NO		

TFT TIME & FREQUENCY TECHNOLOGY INC
3000 Orcott St Santa Clara California 95050
(408) 246-6365

TITLE FRONT PANEL MODEL 7700

SIZE D DRAWING NO 66[illegible]0-1990 REV A
SCALE SHT 1 OF

If You Didn't Get This From My Site,
Then It Was Stolen From...
www.SteamPoweredRadio.Com

BISHOP GRAPHICS/ACCUPRESS REORDER NO. A-1538

3.2.1.1 Transmitter Front Panel, Figure 3-1 (continued).

Reference	Panel Indicator	Function
6	FWD PWR	Indicates relative RF output power to the antenna.
7	REV PWR	Indicates RF power reflected from antenna.
8	MUX SIG	Monitors incoming multiplex signal (100% = ±12 kHz deviation).
9	PRGM SIG	Monitors incoming program input signal (100% = ±48 kHz deviation).
10	METER	Multifunction meter controlled by front panel switches.

3.2.1.2 Transmitter Rear Panel, Figure 3-2.

Reference	Panel Indicator	Function
1	Balanced Input	Input for balanced line (Z in = 10K ohms).
2	MUX 1	Input for telemetry or SCA (Z in = 10 K ohms).
3	MUX 2	Input for telemetry or SCA (Z in = 10 K ohms).
4	COMP INPUT	Input for composite signal. When using this input, ground "-" side of BALANCED INPUT.
5	RF PWR ADJ.	Adjusts power supply voltage to final power amplifier to vary RF power output.
6	10 MHz OUT	Checks frequency accuracy of TCXO with external standard.
7	Remote	For use with Model 7770 TAC panel.
8	AC Power	Connects to power source.
9	Fuse	Power line fuse SLO BLO (120V = 1 A; 240V = 1/2 A).

www.SteamPoweredRadio.Com

3.2.1.2 Transmitter Rear Panel, Fig. 3-2 (continued).

Reference	Panel Indicator	Function
10	RF Power Out	Output to antenna. Type "N" female connector. Z_0 = 50 ohms

NOTE

THE TRANSMITTER AND RECEIVER ARE NOT EQUIPPED WITH AC POWER SWITCHES. WHENEVER THE UNITS ARE CONNECTED TO AN AC POWER SOURCE, THE AC POWER IS "ON".

3.2.2 Model 7771 Receiver System Mainframe

3.2.2.1 Receiver Front Panel, Figure 3-3

Reference	Panel Indicator	Function
1	OPERATE LED	Indicates that Receiver A or B is in operating condition.
2	METER	Indicates level as a function of the position of the Meter Function Switch, Item 3.
3	METER FUNCTIONS Switch	Selects the function to be monitored by the meter Item 2.
4	OPERATE Switch	Selects the RAC mode of operation (used with RAC only).
5	*A, B, NONFAILURE, LEDs	Indicates which receiver output is in use (used with RAC only).

*If receiver B is not supplied, the B LED frame will remain unlit.

3.2.2.2 Receiver Rear Panel, Figure 3-4

Reference	Panel Indicator	Function
1	RF IN	Receiver input from antenna. Connects to mainframe RF OUT A and B, item 6.
2	COMP	Receiver output composite signal.

www.SteamPoweredRadio.Com

NEXT ASSY	USED ON
5004-7770	7771

REVISIONS

SYM	DESCRIPTION	DR	CHK	AUTH	DATE
A	REL. FOR MANUAL PRINTING	[illegible]	[illegible]	[illegible]	[illegible]
B	REVISED TO INCLUDE RUN 4 REAR PANEL CONFIGURATION	MY	[illegible]	[illegible]	[illegible]

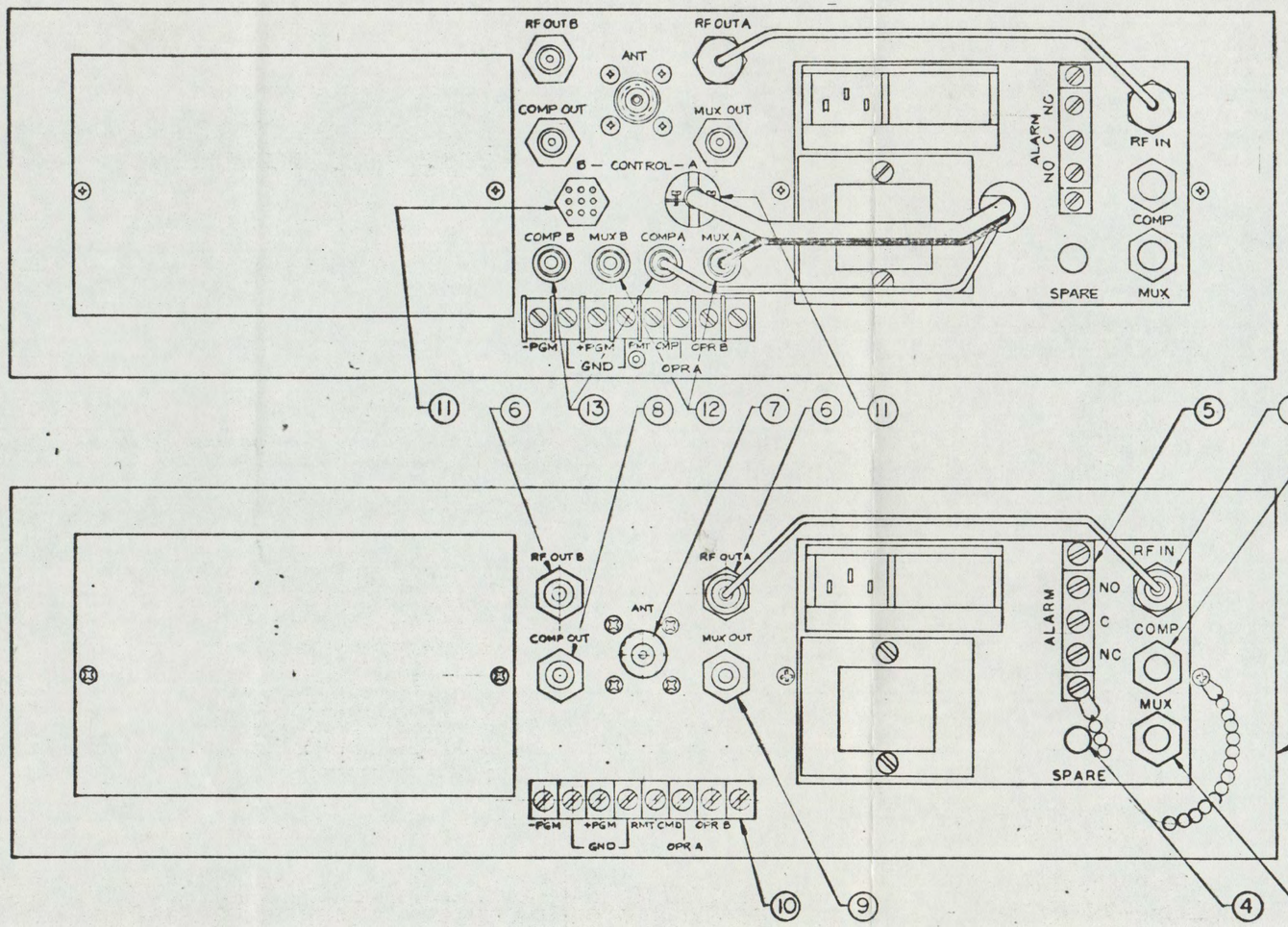

REAR PANEL CONFIGURATION B
EFFECTIVITY AS FOLLOWS:

MODEL	SERIAL NO.
7701	206 AND UP
7703	254 AND UP

FIG 3-4
REAR PANEL CONFIGURATIONS
MAIN FRAME, MODEL 7771
WITH RCVR IN "A" COMPARTMENT
AND BLANK PANEL, FOR SINGLE SYSTEM.
(RECEIVER REAR PANELS FOR MODELS 7701 & 7703 ARE IDENTICAL.)

REAR PANEL CONFIGURATION A
EFFECTIVITY AS FOLLOWS:

MODEL	SERIAL NO.
7701	201 TO 205 (INCL.)
7703	201 TO 253 (INCL)

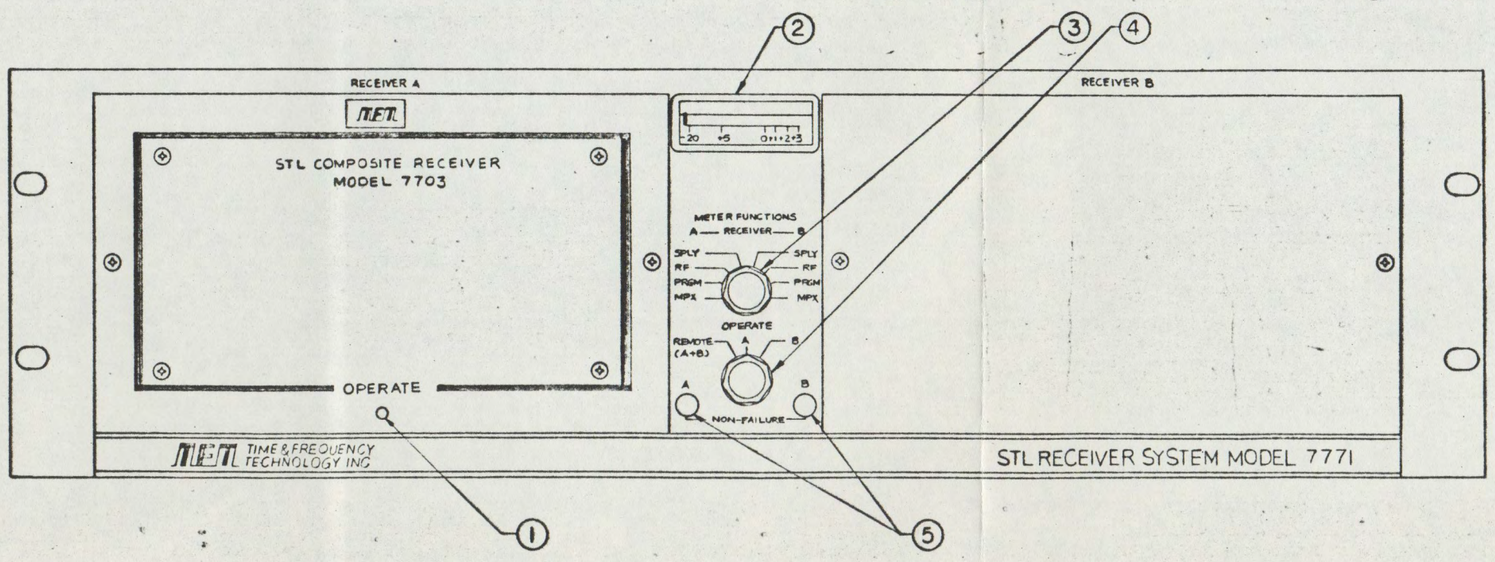

FIG 3-3
FRONT PANEL CONFIGURATION.
MAIN FRAME, MODEL 7771
WITH COMPOSITE RCVR MODEL 7703
IN RECEIVER "A" COMPARTMENT AND
BLANK PANEL FOR SINGLE SYSTEM.

QTY PER ASSY	ITEM NO.	EN NO.	PART NO.	DESCRIPTION	REF DES

LIST OF MATERIALS

REMOVE ALL BURRS AND SHARP EDGES

TOLERANCES UNLESS OTHERWISE SPECIFIED
.XX ± ANGULAR
.XXX ± ±

DO NOT SCALE THIS PRINT

DRAWN BY [illegible] DATE 11/2/79
CHK BY [illegible] 12/21/79
PROJ. ENG.
MFG. ENG.
APPD.
APPD.
ECO NO.

TFT TIME & FREQUENCY TECHNOLOGY INC
3000 Olcott St. Santa Clara California 95050
(408) 246-6365

TITLE MODEL 7771 STL RCVR SYSTEM

SIZE D DRAWING NO 6600-2112 REV B
SCALE SHT OF 1

www.SteamPoweredRadio.Com

BISHOP GRAPHICS/ACCUPRESS REORDER NO. A-1538

3.2.2.2 Receiver Rear Panel, Figure 3-4 (continued).

Reference	Panel Indicator	Function
3	MUX	Receiver output multiplexed signal.
4	SPARE	Hole for BNC connector.
5	ALARM	Output for controlling an external alarm.
6	RF OUT A and B	Mainframe RF output to receiver A and B RF input, item 1.
7	ANT	Type N connection to external antenna.
8	COMP OUT	Provides the composite output of the receiver selected for operation.
9	MUX OUT	Provides the multiplex output of the receiver selected for operation.
10	Barrier Strip	For connection to external signals and controls used in receiver operation.
11	CONTROL A or B	Provide DC voltages and receiver status and control signals to mainframe.
12	MUX A or B	Provides multiplex signals for metering and auto switching purposed to mainframe.
13	COMP A or B	Provides programming signals for metering to mainframe.

3.2.3 Transmitter Automatic Changeover (TAC)

The TAC has front panel switches for testing the automatic function by locking either transmitter in the transmitting mode. Also located on the front panel are LEDs for indicating which transmitter is being directed to transmit and one LED for indicating that AC power is present.

www.SteamPoweredRadio.Com

3.2.3.1 TAC Front Panel, Figure 3-5

Reference	Panel Indicator	Function
1	Tx 1 TEST S1-A	Tests the automatic changeover function and transmitter No. 1
2	Tx 2 TEST S1-B	Tests the automatic changeover function and transmitter No. 2
3	Tx 1 ON S1-C	Locks transmitter No.1 in the transmit mode
4	Tx 2 ON S1-D	Locks transmitter No. 2 in the transmit mode
5	AUTO S1-E	Puts the TAC unit in the automatic mode
6	TRANSMITTER 1 LED 1	Indicates that transmitter No. 1 is radiating
7	TRANSMITTER 2 LED 2	Indicates that transmitter No. 2 is radiating
8	AC POWER LED 3	Indicates that AC line power is ON

3.2.3.2 TAC Rear Panel Inputs and Outputs, Figure 3-6

Reference	Panel Indicator	Function
1	Power Line Cord	Supplies 120/240V AC line power
2	Fuse	1/2 A, 120V AC; 1/4 A, 240V AC
3	Tx 1 J1	RF input from transmitter No. 1
4	ANT J2	RF output to antenna
5	Tx 2 J3	RF input from transmitter No. 2
6	Status J4	Output for controlling external alarm; 50V, 250 MA maximum
7	Tx 1 J5	Input and output control signals to transmitter No. 1
8	Tx 2 J6	Input and output control signals to transmitter No. 2

www.SteamPoweredRadio.Com

NEXT ASSY	USED ON
5004-7770	7770

REVISIONS

SYM	DESCRIPTION	DR	CHK	AUTH	DATE
A	REMOVE SK. EFFECTIVE SERIAL NO. 201 AND UP	[illegible]	[illegible]	[illegible]	[illegible]

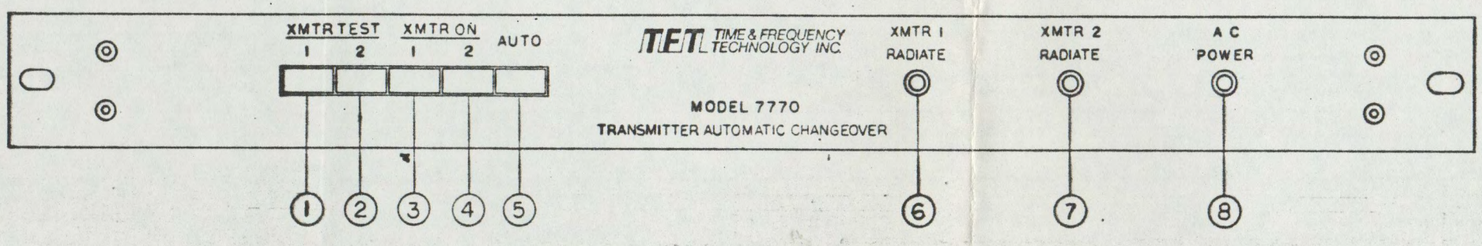

FRONT PANEL
FIG 3-5

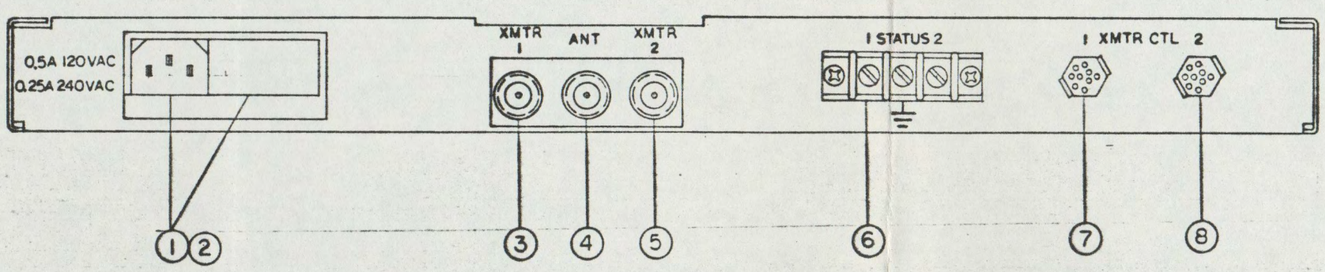

REAR PANEL
FIG 3-6

QTY PER ASSY	ITEM NO.	EN NO.	PART NO.	DESCRIPTION	REF DES.

LIST OF MATERIALS

REMOVE ALL BURRS AND SHARP EDGES

TOLERANCES UNLESS OTHERWISE SPECIFIED
.XX ± ——— ANGULAR
.XXX ± ——— ± ———

DO NOT SCALE THIS PRINT

DRAWN BY	[illegible]	DATE 7/6/79
CHK. BY	[illegible]	[illegible]
PROJ. ENG	[illegible]	[illegible]
MFG. ENG	[illegible]	10/3/79
APPD	[illegible]	[illegible]
APPD	[illegible]	[illegible]
ECO NO		

TET TIME & FREQUENCY TECHNOLOGY INC
3000 Olcott St Santa Clara California 95050
(408) 246-6365

TITLE FRONT & REAR PANEL MODEL 7770

SIZE D DRAWING NO 6600-2115 REV A

SCALE 1/1 SHT 1 OF 1

www.SteamPoweredRadio.Com

BISHOP GRAPHICS/ACCUPRESS REORDER NO. A-1538

3.2.4 Receiver Automatic Changeover (RAC)

The RAC controls are located on the Model 7771 Receiver mainframe front panel as shown in Figure 3-3. The function of the OPERATE selector switch is to control which receiver module is to be in operation. The switch is also used to override the automatic function of the RAC. By momentarily selecting a specific receiver and placing the switch back to the AUTO position, the RAC automatic switchover circuitry and receiver circuitry are tested. Refer to subsection 3.2.2, Model 7701 and 7703 Receiver, for control panel functions and designations.

3.3 Operating Levels

3.3.1 Monaural

The level required to modulate a monaural transmitter is 1.24 VRMS (3.5VPP) into 10 K ohms unbalanced or 20 K ohms balanced. As the transmitter uses preemphasis, this modulation level is correct only for frequencies substantially below the crossover frequency of 2100 Hz. The metering circuit detects the audio level before preemphasis when testing with an audio sine wave; therefore, reduce the input by 3 dB at 2100 Hz and 6 dB per octave above 2100 Hz. It is recommended that transmitter audio input be preceded by a frequency selective audio limiter. Because there are many types of audio limiters, always set up the limiter or limiters according to manufacturer's specifications.

3.3.2 Composite

The level required to modulate the composite input on the composite transmitter is 1.24 VRMS (3.5VPP) into 10 K ohms unbalanced. The metering circuit detects the total composite bandwidth, thereby is being driven from a stereo generator, the audio inputs of the stereo generator should be limited using a frequency selective limiter, to be set up according to manufacturer's specifications.

3.3.3 Subcarrier

The two multiplex inputs on the Model 7700 transmitter are provided for secondary programming and control subcarrier input (injection). The program material and/or control tones are applied to the input of the subcarrier generator or generators at the studio. The output from the subcarrier generator or generators is applied to the multiplex input of the STL. The requirements for program material are more critical than control requirements; therefore, multiplex input No. 1 is factory set for +8 kHz injection with 0.53 VRMS for program subcarrier input. The transmitter multiplex input No. 2 is factory set for ±4 kHz injection with 0.53 VRMS input to accommodate the control subcarrier signal. If one of the multiplex inputs is not used, the subcarrier level should be increased by adjusting the multiplex level control located on the audio and meter PCB so that one subcarrier injection level will equal ±12 kHz deviation. Refer to section 5.4 for how to adjust the multiplex input level controls.

If You Didn't Get This From My Site,
Then It Was Stolen From...
www.SteamPoweredRadio.Com

Section 4

THEORY OF OPERATION

4.1 Block Diagram Discussion

4.1.1 Transmitter (Figure 6-1)

The TFT Model 7700 Studio Transmitter Link (STL) uses a dual phase-locked loop (PLL) system to develop the frequency synthesized carrier output. The first PLL consists of the A2A1 VCO/Modulator and the A2A2 VCO Synthesizer. TThe Second PLL contains a 10 Mhz Temperature Compensated Crystal Oscillator (TCXO) master oscillator, and a frequency divider circuit.

The first PLL input is from the A1 Audio and Meter Amp Circuits which take the programmed or multiplexed inputs and amplifies the signal. There are three outputs from the A1 board. The first output is from the instrumentation amplifier circuits to the meter function switch, which selects the proper signal parameters for display on the front panel. The second output is an RF sensing voltage to the A4 Power Supply and Fail Detect Circuit, which will cause the voltage in the last Power Amplifier (A5) stage to be disabled if there is a failure. The third output is the summed and amplified program and/or multiplex signals which go to the A2A1 VCO/Modulator.

The VCO/Modulator is a 38-48 MHz voltage-controlled oscillator with 2 tuning inputs. One is the modulation input tuning from A1. The second is the PLL feedback from the A2A2 VCO Synthesizer, which takes the 38-48 MHz VCO/Modulator output and divides it by 4. This frequency is then divided by a programmable divider which has been selected for the transmitter carrier frequency. The output of the programmable divider will be 15.625 kHz. This is compared with a 15.625 kHz signal derived from the 10 MHz master oscillator in the A2A4 VCXO Synthesizer board. If the signals are equal, the A2A1 VCO is locked, and its 38-48 MHz output goes to the A3A1 Preamplifier input mixer R.F. input.

The mixer L.O. input comes from the A2A3 VCXO Multiplier. Here, a voltage-controlled crystal feedback oscillator operates at 54 MHz. This frequency goes to a divide-by-54 circuit on the A2A4 VCXO Synthesizer, where the resultant 1 MHz signal is compared with a 10 MHz divided-by-10 signal from the 10 MHz master oscillator. If equal, the A2A4 output to the VCXO Multiplier oscillator locks the oscillator on frequency. The 54 MHz is then multiplied by 8 to 432 MHz, filtered to remove harmonics, and applied to the A3A1 Preamplifier L.O. input.

The Preamplifier output is the mixed 38-48 MHz and 432 MHz signals, or 470-480 MHz, which is amplified and filtered to remove

www.SteamPoweredRadio.Com

4.1.1 Transmitter (Figure 6-1) (continued)

unwanted mixing products. The output of this filter, FL2, feeds the Doubler/ Driver, A3A2. Here the frequency is doubled and amplified to approximately 1 watt. The Doubler/Diver output is then amplified in the A5 Power Amplifier to approximately 12 watts. Forward and Reverse (reflected) R.F. power indications are sampled at the Power Amplifier and sent to the meter drive circuits through the meter function select switches.

The A4 Power Supply board has three regulated fixed power supplies (+12 volts, + 13.8 volts, and +5 volts) and one regulated variable supply (+3 volts to approximately +13.5 volts). The Power Supply board also contains the failsafe logic to detect the RF Power Sense signal from A1, and also the System Lock signal from the A2 module. If either or both indicate a failure, Q2 of the Power Amplifier is shut down to insure no RF can be transmitted if the unit is not operating properly. The Fail-Interface signal is sent to the optional Model 7770 Transmitter Change-over Switching Unit (if installed) to switch from the failed transmitter to the alternate hot standby unit.

4.1.2 Receiver (Figure 6-2-1 for 7703 and Fig. 6-2-2 for 7701)

The Model 7700 Studio Transmitter Link (STL) receivers can be selected for wide bandwidth (Model 7703 Composite) or narrow bandwidth (Model 7701 Monaural) I.F. applications. Both receivers are designed to operate in the TFT Model 7771 system mainframe. The mainframe chassis holds switches and a meter for monitoring and testing the STL receivers. It also holds the optional receiver automatic changeover circuit board power splitter and balance audio PC board for monaural systems.

The RF antenna input of 940-960 MHz goes to the A1 Tuner assembly where it is amplified and applied to the RF input of a double-balanced mixer. At the mixer LO input is the 866-886 MHz output from the A2 Local Oscillator (L.O.) assembly. The L.O. frequency is produced by placing a crystal, whose oscillating frequency is selected by the formula Fin (MHz) - 74 divided by 16 (where Fin = STL frequency), into an oscillator. The oscillator output is then amplified, and the sixteenth harmonic selected. The 16th harmonic (866-886 MHz) is mixed with the 940-960 MHz RF input producing the Tuner assembly first I.F. of 74 MHz. The 74 MHz is amplified and applied to the second mixer on the A1 assembly where it is mixed with the output of the 84.7 MHz second L.O. The output of the mixer is the difference frequency of 10.7 MHz going to the 10.7 MHz Tuner output jack.

If the receiver is a Model 7703 composite receiver, the 10.7 MHz signal is applied to the A3 10.7 MHz I.F. assembly. Here it is amplified and passed through a linear-phase bandpass filter to the input of a multi-stage I.F. amplifier. Separate outputs from the multi-stage I.F. amplifier develop the AGC voltage used to prevent input signal overloading in the A1 Tuner Assembly and feed the A5 Power Supply/Fail Detector board, as well as the RF meter input on the Model 7771 mainframe chassis.

www.SteamPoweredRadio.Com

4.1.2 Receiver (Figure 6-2)(continued)

The output of the multi-stage amplifier goes to a limiting amplifier whose output is mixed with a 10 MHz L.O. signal to produce 700 kHz. The 700 kHz signal goes through a lowpass filter to a switching amplifier which produces a TTL compatible square wave output.

The 700 kHz square wave signal goes to the A4 Composite Baseband assembly and feeds into a one-shot multivibrator. The multivibrator circuit has two outputs. One goes through a 75 kHz low-pass linear-phase filter. The signal modulation is removed and applied to a phase-correcting amplifier for maximum phase linearity and stereo separation, and through an audio amplifier to drive the composite program output to a 1.23 VRMS level at 1 k ohms. The second multivibrator output goes to a 110-210 kHz band-pass filter where the multiplex information is recovered. The signal is filtered and then amplified to a 0.53 VRMS output level.

If the receiver is a 7701 Monaural Receiver, the 10.7 MHz signal is applied to the A4-2 circuit board where it is amplified (by Q1 and Q2), filtered (by FL1 and FL2) and applied to a quadrature detector integrated circuit (U1) where demodulation takes place and the AGC voltage is developed. The recovered audio is fed to separate filters (L1, L2, L3, L4 and FL3) and amplified (by U3 and U4) for signal processing and amplification to the specified output level.

The A5 Power Supply/Fail Detector board provides one unregulated (+16 volts) and three regulated voltage outputs (+5 volts, + 12 volts, and -12 volts). The AGC input to the fail detector goes to a voltage comparator with an output referenced to a TTL level. This level is used by the associated TTL logic to develop the mute signal, drive the alarm relay, and light the OPERATE LED on the Model 7701/7703 front panel. The Failure signal output is used to drive the optional Receiver Automatic Changeover (RAC) circuit board which switches automatically to the hot standby receiver if a failure occurs.

4.2 Detailed Circuit Description.

4.2.1 Transmitter Circuits.

4.2.1.1 Audio and Meter board (A1) Figure 6-3

Operational amplifiers U1 and U4 are fed from the rear panel balanced input barrier strip. The negative (-) input is applied to U1 and the positive (+) side to U4. The outputs of the two amplifiers are applied to U2, where the balanced input is converted to a single-ended signal. Single-ended inputs, such as composite signals, can be amplified through this circuitry by grounding the "-" input on

www.SteamPoweredRadio.Com

4.2.1.1 Audio and Meter Board (A1) Figure 6-3 (continued)

the barrier strip and connecting the signal between the "+" input and "GND". The 75usec Preemphasis can be selected by closing S1, but this should only be used if a mono signal is being transmitted. Operational amplifier U3 is a summing amplifier for the multiplex and program signals. Its output goes to the A2A1 VCO/Modulator assembly. U5 takes the U1 and U4 outputs, before the preemphasis switch S1, and sums them together to drive the meter circuits. For 100% modulation on the program input, U5 supplies 1.4 VRMS to the meter circuits. The front panel meter reads the signal level without preemphasis.

The 2 Mux inputs to the Audio and Meter Amp are input to summing amplifier U6 through R30 and R31 level adjusters. The U6 output drives U7, which amplifies it to the 1.4VRMS needed for full front panel meter deflection.

Peak detector U8 rectifies the multiplex and program input signals. The output of U8 is buffered by meter driver U9 to prevent loading the holding capacitor C28. Full scale meter deflection is adjusted by R46.

The Reflected and Forward power inputs to U10 and U11 come from the A5 Power Amplifier assembly directional coupler. The signals are amplified by U10 and U11 and applied to the meter circuit through the meter function switch. Resistors R56 and R58 are used to cancel out crosstalk on the coupler when operating into a purely resistive 50 ohms load. Any reflected power above this crosstalk is indicated on the meter. Voltage comparator U12 detects loss of RF power and triggers the transmit disable circuits on the A4 Power Supply/Fail Detector board.

4.2.1.2 A2 module.

The A2 Module contains the four boards which make up the dual phase-lock system used to produce the synthesized carrier frequency.

The A2A1 VCO/Modulator (Figure 6-4) is a voltage controlled oscillator with two tuning inputs. The input composite program from the A1 Audio and Meter board goes to varicap diodes CR1 and CR2. This is the modulation input to the board. Phase-lock loop tuning for the VCO goes to the junction of CR3 and CR4, and adjusts the output frequency of VCO Q1 to the correct 38-48 MHz value. The VCO output is buffered by Q3 for output to the A2A2 VCO Synthesizer, and by Q2, Q4 for output to the A3A1 Preamplifier.

The A2A1 output goes to the A2A2 VCO Synthesizer board (Figure 6-5). Buffered by Q3, the 38-48 MHz signal is divided by four in U4. The resulting 9.5-12 MHz signal is applied to a divide-by-N

www.SteamPoweredRadio.Com

4.2.1.2 A2 Module(continued)

circuit which is programmable by S1 and S2 so that the output frequency will be 15.625 kHz when the VCO on the A2A1 VCO/Modulator is phase-locked to the correct frequency. The divide-by-N output is applied to U3 pin where it is compared to a 15.625 kHz output from U1 and U2 at the U3 input, pin 1. Dividers U1 and U2 divide by 64 the 1 MHz signal from A2A4 which is derived from the TCXO master oscillator signal. If the VCO signal at U3 pin 3 is higher or lower than the reference frequency at U3 pin 1, the U3 phase comparator will provide an output from pin 13 or pin 2. These outputs are amplified by U5 and output to the A2A1 VCO/Modulator as the Phase Lock Control input to CR3 and CR4. When U3 pins 2 and 13 both have an output, the signals being compared are equal, and U6 pin 8 enables the Phase Lock Sense signal to A2A4 VCXO Synthesizer.

The A2A3 VCXO/Multiplier (Figure 6-6) contains a stable, 54 MHz crystal controlled, voltage tuned oscillator made up of Q2 and Q5 with associated components. One output of this oscillator is buffered by Q1 and output to the A2A4 VCXO Synthesizer. The other output goes to switching amplifiers Q4 and Q6, which give a high level signal out to drive CR6, the step recovery diode multiplier. The output of this circuit is a signal with a high harmonic content which is applied to a 432 MHz signal filter, which is the 8th harmonic of 54 MHz. The 432 MHz signal is selected, and applied to the A3A1 Preamplifier.

In the A2A4 VCXO Synthesizer (Figure 6-7), the Z1 10 MHz TCXO output is divided by 10 in U2 and the resulting 1 MHz applied to U5 pin 3, and also output to the A2A2 VCO Synthesizer. The buffer Q1 allows the TCXO to be synchronized to an external clock at the rear panel. The input to phase comparator U5 pin 1 is derived from the A2A3 VCXO/Multiplier 54 MHz output. The 54 MHz is divided by 12 in U1, and the resulting 27 MHz divided by 3 three times by U6, U9, and U10 to make the 1 MHz input to U5 pin 1. The phase comparator compares the pin 1 and pin 3 reference signals and provides an output on either pin 13 or pin 2, which is amplified by U8 and fed back to the A2A3 VCXO/Multiplier.

The U5 phase comparator pin 13 and pin 2 outputs also go to NAND gate U7 which determines if the 54 MHz VCO loop is locked. If it is locked, and the 38-48 MHz loop is locked (Phase Lock Sense input to U3 is enables), then the System Lock (U3, pin 3) output to the A4 Power Supply and Fail Detect Circuit board will remain low and the SYSTEM UNLOCKED LED will remain off.

4.2.1.3 A3 Module

At the A3A1 Preamplifier (Figure 6-8), the 38-48 MHz A2A1 ACO/Modulator output is mixed with the 432 MHz filtered output from A2A3 VCXO/Multiplier in the CM-2 mixer. The mixer output of 470-480 MHz is amplified by tuned amplifiers Q4, Q7, and Q9. Transistors Q3, Q6, and Q8 provide bias for Q4, Q7 and Q9 respectively. Switches Q1, Q2, and Q5 are controlled by the A4 Power Supply and Fail Detect board Transmit

www.SteamPoweredRadio.Com

4.2.1.3 A3 Module (continued

Disable output, and the front panel RF Power switch, and will shut down the Preamplifier when enabled.

The output of the Preamplifier is filtered to remove unwanted mixing components, and applied to the A3A2 RF Doubler Amplifier (Figure 6-9). The 470-480 MHz input is amplified and doubled by Q1, and the 940-960 MHz output amplifed by Q2. The Q3 and Q4 circuits filter and amplify the doubled frequency to supply the drive needed for the Power Amplifier input.

4.2.1.4 A5 Module

The A5 Module (Figure 6-10) is a Power Amplifier with a bandwidth of 940-960 MHz. The RF Doubler Amplifier output of 940-960 MHz at 1 watt is amplified to Q2, which will amplify the signal to the 12 watts output level. This level is controlled by connecting the Q2 Vcc to a varying supply which is changed as needed from approximately +6 VDC to a maximum of +13.5 VDC to maintain an output power of approximately 12 watts. The W2 output is filtered and applied to a directional coupler, which monitors forward and reflected output power, and then goes to the Type N output connector on the rear panel.

4.2.1.5 A4 Power Supply and Fail Detect Circuit (Figure 6-11)

The A4 Power Supply has three regulated fixed power supplies (one +12 volts, one +13.8 volts, and one +5 volt) and one regulated variable supply of approximately +3 to +13.5 volts. The variable supply is controlled by the Fail Detect Circuits, and in case of a transmitter malfunction the last stage of the A5 Power Amplifier is shut down.

The RF Power switch turn-on circuitry is also contained on this board. When the RF Power switch is turned on, one-shot U3 is set for approximately 3 seconds. During the time U3 is set, OR gate Q9, Q10 disables the RF Power sense to allow the A5 Power Amplifier to reach full power. If after 3 seconds no power output is detected, the system will be shut down and a Transmit Disable signal is enabled to prevent RF power output should the system be in an unlocked condition. The Transmit Disable, signal also turns on Q7, Q8 to enable a Failure signal to the rear panel to activate the optional Model 7770 Transmitter Automatic Changeover unit.

4.2.1.6 (Optional) Model 7770
Transmitter Automatic Changeover (TAC) Figure 6-12)

The TAC is an optional rack mount unit used to monitor critical transmitter circuit parameters. If a malfunction is detected in a transmitter, the unit will automatically switch to a hot stand-by unit. The stand-by transmitter can also be selected by a front panel switch, or by relay closure from a remote control location.

www.SteamPoweredRadio.Com

4.2.1.6 (Optional) Model 7770 TAC (continued)

When AC power is first applied, the TAC will select the primary transmitter for operation by activating an RC timing network which holds Q1 "ON" momentarily during AC turn-on. This actuates relay K1, which applies power to the coaxial antenna relay, connecting it to the primary transmitter, the (secondary) hot stand-by transmitter RF Power Sense circuitry on its A1 Audio and Meter Amp board will read a large Reflected Power and no Forward Power, and shut down the A3A1 Preamplifier power supply. With the secondary transmitter thus operating but not transmitting, the primary unit is operating into the antenna. Its RF Power Sense circuitry senses the output Forward Power, and turns off the A4 board Transmit Disable signal which was disabling power to the A3A1 Preamplifier. Transmitter power is enabled, and the A4 board Failure output to the TAC Q1 goes high, taking over from the momentary RC timing circuit.

The TAC will operate like this until there is a malfunction in the primary transmitter. When this happens, the primary unit's Fail Detect Circuitry will cause its Transmit Disable circuitry to turn off the A3A1 Preamplifier power, and the Failure signal at the A4 output will go low. The low Failure input to the TAC Q1 will cause it to deactivate relay K1. When K1 deactivates, the antenna is switched from the primary to the secondary (hot stand-by) transmitter, enabling its A1 board RF Power Sense circuitry. This turns on the secondary transmitters A3A1 Preamplifier power, and allows it to take over the transmitting operation while the primary unit is repaired.

If the TAC is used with other than TFT STL transmitters, a secondary switching input is available. Operational amplifier U1 acts as a logic level comparator, and if it senses input logic signals exceeding 2.5 VDC the U1 output will go "high" and drive the Q2 output, which is a Q1 input, low. This enables transmitters other than TFT's to operate the switching circuitry to change from primary to secondary transmitter operation.

4.2.2 Receiver Circuits

4.2.2.1 A2 Local Oscillator (Figure 6-14)

The A2 Local Oscillator output is frequency determined by the 940-960 MHz STL assigned frequency. Oscillator Q1 has an output frequency controlled by crystal Y1 whose frequency of oscillation is selected by the formula Fin (MHz) -74 divided by 16 (where Fin = the assigned STL frequency). The output of the Q1 oscillator is applied to harmonic amplifiers Q2 and Q3, and the 16th harmonic of the oscillator frequency selected as the J1 Local Oscillator Out signal. Transistor Q4 at the base of Q1 is the Mute (squelch) switch to turn off oscillator Q1 when selected.

www.SteamPoweredRadio.Com

4.2.2.2 A1 Tuner (Figure 6-13)

The 940-960 MHz STL input frequency comes into the Model 7771 receiver mainframe chassis through the rear panel antenna connection. The input is filtered by the FL1 coaxial filter to reduce image frequency and adjacent channel interference and input to the Model 7701/7703 A1 Tuner assembly at J1. The input frequency is amplified by Q1 and applied to mixer DBM1. The bias to Q1 is controlled and regulated by Q6 to reduce noise at the input circuit. The LO input to DBM1 is the 866-886 MHz output from the A2 Local Oscillator assembly to the A1 Tuner J2 input. The DBM1 mixer output is the 74 MHz difference frequency. The 74 MHz goes through the C11, C12, L5 tuned input to AGC controlled FET amplifier Q2. The output of Q2 goes to a second AGC controlled FET amplifier, Q3. The output of Q3 goes to the Q5 mixer circuit where it is mixed with the 84.7 MHz output of the 2nd Local Oscillator, Q4. The Q5 mixer difference frequency of 10.7 MHz is then applied to the A1 Tuner output jack, J3.

4.2.2.3 A4-2 Monaural Baseband (Figure 6-17) Model 7701 only

If the receiver is a narrow bandwidth Model 7701 monaural receiver, the Tuner assembly output is applied to the J1 input to the A4-2 Monaural Baseband assembly. Coupled through C3,the signal is amplified in Q1, Q2 tuned amplifier and applied to a linear-phase bandpass filter, FL1 and FL2. The filter output is then used to drive U1, a multi-stage FM-IF amplifier system. Amplifier system U1 has three outputs. The U1 pin 13 output is to the RF meter through the meter adjust, R41. The AGC is set by R15 at pin 16 and the delayed AGC output from U1 pin 15 is amplfied by U2 and used to control the gain of the A1 Tuner 74 MHz amplifiers to prevent strong received signals from overloading the input circuits. It is also used on the A5 Power Supply & Fail Detect assembly to enable the Mute (squelch) signal. The third output is the detected audio ouput at pin 6 to the base of Q3 and to high pass filter L2, L3, L4, C44, C45. The high pass output drives operational amplifier U4, which amplifies the multiplex output from the receiver to the 0.53 VRMS level as set by R32, the U4 gain set resistor. The output of emitter follower buffer Q3 is passed through a lowpass linear phase filter to the input of operational amplifier U3, which amplifies the composite output signal from the receiver to the 1.23 VRMS level which is set by U3 gain adjust R26.

4.2.2.4 A3 10.7 MHz IF (Figure 6-15) Model 7703 only

If the receiver is a wide bandwidth IF Model 7703 composite receiver, the 10.7 MHz J3 output from the A1 Tuner is input to the 10.7 MHz IF assembly, J1. The input is amplified by Q1 and filtered by FL1, a linear-phase 10.7 MHz bandpass filter. The filter output is then applied to U1 FM-IF system multi-stage amplifier. The U1 pin 13 output goes to the RF meter and its output is set by R33. The AGC output is taken from pin 15 of U1 and is amplified by U4 to be sent to the A1 Tuner to prevent input signals from overloading the Tuner circuits, and to the A5 Power Supply & Fail Detect assembly where it is

If You Didn't Get This From My Site,
Then It Was Stolen From...
www.SteamPoweredRadio.Com

4.2.2.4 A3 10.7 MHz IF (Figure 6-15) Model 7703 only (continued)

used to control the Mute (squelch) logic circuits. The U1 pin 15 AGC can be adjusted by the Pin 16 input AGC adjust, R9. The U1 output is an amplified 10.7 MHz to mixer U2 pin 1. The mixer also has an input at pin 8 from the emitter of Q2, a 10 MHz oscillator. When the two signals are mixed, the difference frequency of 700 kHz is selected at the U2 mixer pin 6 output and filtered by lowpass L1, L2, C28, C29, C30. The frequency is then applied to the input of U3. As long as the Muting switch Q3 is not enabled, U3 will amplify the 700 kHz and it will be coupled through C37 to the base of Q4. The output of the limiting amplifier Q4 is a 700 kHz square wave to the A4-1 Stero Baseband assembly.

4.2.2.5 A4-1 Stereo Baseband (Figure 6-16) Model 7703 only.

The 700 kHz square wave input to the A4-1 Baseband assembly drives one-shot multivibrator U1. The pin 6 output of the one-shot goes through buffer Q2 to the F1 75 kHz lowpass linear-phase filter. Here the signal modulation is removed and applied to Q3, a phase-correcting common emitter amplifier. Phase angle is adjusted by the setting of L9 for maximum phase linearity and stereo separation. The signal is then amplified through audio amplifier U3 to drive the composite program output to 1.23 VRMS into 1 k ohms.

The pin 1 output of U1 goes through buffer Q1 to the 220 kHz L3, L4, L5, C9, C10, C11, C12 lowpass filter. Here, the multiplex information is recovered and input to amplifier U2. At the output of U2, the multiplexed signal passes through a phase correcting circuit of C20, C22, C24, C25, C27, C28 and adjustable by L7 and L8. The phase-corrected signal is then input to amplifier U4 where the signal is amplified to the 0.53 VRMS Mux output level.

4.2.2.6 A5 Power Supply & Fail Detect (Figure 6-18)

The Power Supply circuits on the A5 board are driven from a center-tapped transformer secondary and the input rectified by CR1-CR4. The negative rectified voltage is filtered by C5, C6 L2, C11, C14 and applied to the -12v regulator, U6. The output of U6 is a regulated -12v to be distributed through the unit.

The positive rectified voltage is filtered by C3, C4, L1, C7, C9 and applied to +12v regulator U5. The filtered but unregulated voltage is also output to the unit as an unregulated +16 volts. At the output of U5 the output is distributed to other boards in the unit as a regulated +12 volts. It is also used to drive U4, a +5 volt regulator. The output of U5 is also distributed through the unit as needed.

The A5 assembly Failure Detect circuits are also on this board. The AGC input from the A3 10.7 MHz IF assembly, (Model 7703 only) or the A4-2 Monaural Baseband assembly (Model 7701 only) is detected by diode CR7 and input to voltage comparator U1. If the AGC

www.SteamPoweredRadio.Com

4.2.2.6 A5 Power Supply & Fail Detect (Figure 6-18)(continued)

exceeds a level set by reference adjust potentiometer R4, which it would do if the signal were lost, the output of U1 will apply a logical "High" to the U2 pin 10 input. With switch S1 in the MANUAL position, the output of U2 pin 8 will always be high. This turns on switch Q1 and actuates relay K1, enabling the rear panel Alarm. It also enables the Failure signal to the Receiver Automatic Changeover (RAC) circuits, if installed. With U2 pin 8 always "High", U2 pin 6 output will always go "Low" when S1 is in MANUAL, disabling the Mute circuits. When S1 is in the AUTO position, the U2 pin 3 output will go "Low" only if the output of one-shot U3 has been enabled. This means the output of U2 pin 8 will remain "Low" unless U3 is enabled, or the AGC level enables the U1 logic output.

4.2.2.7 A7 Audio/Metering (Figure 6-19)

The Audio/Metering assembly contains receiver interconnects and the meter detection and amplifying circuit. When the optional Receiver Automatic Changeover assembly is ordered, it plugs into the Audio/Metering assembly at J5 and J6.

Inputs J1, J2 and J10 on the board are from receiver A, while J3, J4, and J11 are from receiver B. Power for the meter circuit is provided by the +12v on-board regulator, U3. The input voltage to U3 is +16v from both the A and B receivers. If one fails, the other is available to take over immediately through diode OR gate CR1 and CR2.

Power to turn on the "A ON LINE", "B ON LINE" LEDS is routed to the appropriate LED from the supply of the receiver being used. If, for example, receiver "A" is the receiver in use, then the "A" supply voltage will be input to J10 pin 14 and routed to S1 for meter measurement, and to R20 to drive the LED. Diode CR8 will hold the supply voltage at the junction of R20 and R28 to approximately +5v. Diode CR7 is the +5v zener for the "B ON LINE" LED.

Meter amplifier U2 is connected as a voltage comparator circuit. Inputs to the amplifier are selected by the meter select switch S1 setting. Gain control R25 adjusts the amount of meter deflection.

4.2.2.8 (Optional) A8 Receiver Automatic Changeover (RAC) Figure 6-20)

The optional RAC assembly plugs into the Model 7771 Receiver mainframe chassis A7 Audio/Metering assembly, J5 and J6. For RAC operation, the A5 Power Supply and Fail Detect assembly switch S1 must be in the AUTO position.

When the receiver power is first applied, the CLEAR input to U4 pin 4 resets the flip flop. The U4 pin 6 reset will go high which causes a SELECT signal to be input to receiver A.

www.SteamPoweredRadio.Com

4.2.2.8 (Optional) RAC (continued)

On the receiver A A5 Power Supply and Fail Detect assembly, the signal triggers the U3 one-shot multivibrator and mutes the receiver circuits momentarily for the selection process. The SELECT B signal also goes to U8 which selects the receiver A output signals, and to the base of Q1 which is turned on, disabling the receiver B OPERATE LED. The SELECT A signal to the base of Q4 will turn it off, enabling the receiver A OPERATE LED. With receiver A now selected as the primary receiver, the RAC will switch receivers only if the primary receiver has a malfunction (U2 pin 4 or 5 enabled), the receiver B has been selected manually (U2 pin 3 enabled), or if the receivers are caused to switch by a remote command (U1 pin 6 enabled).

Malfunctions are detected in the RAC by monitoring the receivers A and B Failure signals and +16 volt power supply outputs. The receiver selected by the RAC is determined by the Set or Reset condition of U4, and to switch receivers the flip-flop must be changed from one state to the other. This can only be done during a clocking input from the 125 millisecond one-shot multivibrator, U3 pin 4, or from remote or front panel switching to U2 pin 2 or pin 12, respectively. The U3 pin 4 output is enabled by the Exclusive OR output, U2 pin 6. Inputs to the Exclusive OR come from U1 pin 8 and pin 11 outputs. These outputs are controlled by the receiver A and B +16 volt and Failure signals. Both signals are normally "High", and when one goes "Low" it signifies a malfunction and initiates the switching operation. Once switched from receiver A to receiver B, the RAC circuits will hold the selected receiver in operation until there is a malfunction in receiver B, or receiver A is either manually or remotely selected for operation.

4.2.2.9 Option 03 Balanced Audio (Monaural only)

The incoming audio signal at J1-1 is applied to the noninverting input of operational amplifier U2. Balanced output is achieved by driving the inverting input of the second operational amplifier, U1, from U2 to provide a 180-degree phase shift at E1 with respect to E3.

www.SteamPoweredRadio.Com

Section 5

MAINTENANCE

5.1 General

Once installed, the TFT Series 7700 Studio Transmitter Link should require little maintenance. The units should be installed away from vacuum tubes and other heat generating equipment, and the Model 7700 Transmitter provided with adequate ventilation for its rear panel heat sink.

5.2 Access

5.2.1 Model 7700 STL Transmitter

To gain access to circuit assemblies and top-of-chassis components, remove the top cover. Assembly locations and interconnections are shown in Figure 5-1.

5.2.2 Model 7771 STL Receiver Mainframe

To gain access to circuit assemblies and top-of-chassis components, remove the top cover. Assembly locations and interconnections are shown in Figure 5-2.

To remove the Model 7701-7703 receiver module from the chassis, remove two screws at the front and rear panels and pull the module.

5.3 Periodic Maintenance

Once installed, the only maintenance necessary is a periodic proof of performance check of the system to be assured of optimum operation.

The performance of the STL transmitter and receiver units can be easily and quickly checked at the front panel multimeter. Following installation of the STL system, the operational front panel meter readings for each position of the meter selector switch should be recorded. This gives a quick and accurate check of system performance by allowing a comparison of present operation to its operation when new. Gradually changing readings can be quickly spotted by this method, and used to forestall developing problems.

Note

Whenever the transmitter is in operation with RF Power on, the RF Output must be terminated into a 50 ohm, 15W minimum load or the STL antenna. If operated unterminated for extended periods, the RF Power Amplifier can be damaged.

www.SteamPoweredRadio.Com

5.3 Periodic Maintenance (continued)

Also, when comparing the receiver data, consideration must be given to environmental conditions at the time of the reading. Weather conditions or a temperature inversion could cause transmission path fade margins to be reduced, and meter readings might not be indicative of true system performance.

5.4 Receiver AGC and Squelch Adjust

The following adjustment can be made using a test instrument such as the Helper Electronics SINADDER, or an acceptable equivalent. Perform the adjustment as follows:

1. Apply a 400 (approximately) microvolt RF signal, modulated with 1 kHz, to the STL receiver.

2. Connect the signal-to-noise (S/N) measuring test instrument to the receiver per test instrument instructions.

3. Adjust the receiver AGC ADJ control R9 on the A3 10.7 MHz IF board for maximum S/N.

4. The adjustment of R9 will affect the RF meter deflection. Adjust R33 on A3 for correct deflection.

5. The receiver squelch is factory set for a S/N level of approximately 40 microvolts. To reset the squelch level, decrease the receiver input level until the S/N ratio at which squelch muting is desired has been reached.

6. Adjust R4 on the receiver A5 Power Supply and Fail Detect board until muting just occurs. The squelch is now set.

5.5 Troubleshooting Guide

The troubleshooting trees presented here are designed as an aid to locating problems which might occur in the Series 7700 Studio Transmitter Link system. The problems and their solutions are designed as a generalized guide, and should not be taken as the only problems and solutions which might be found.

www.SteamPoweredRadio.Com

5.5.1 Transmitter Troubleshooting

5.5.1.1 No FWD PWR meter reading

5.5.1.1-1

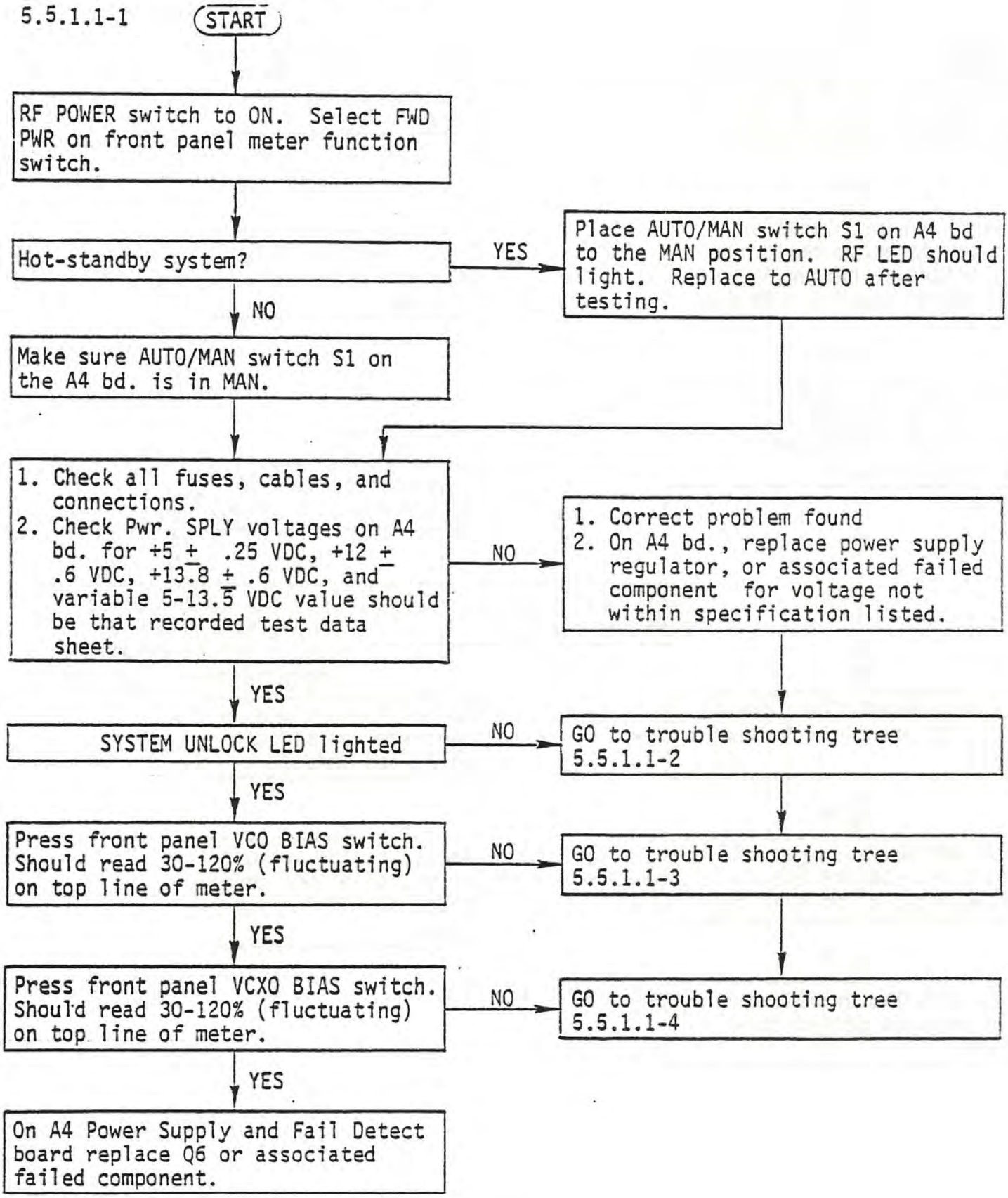

www.SteamPoweredRadio.Com

5.5.1.1-2

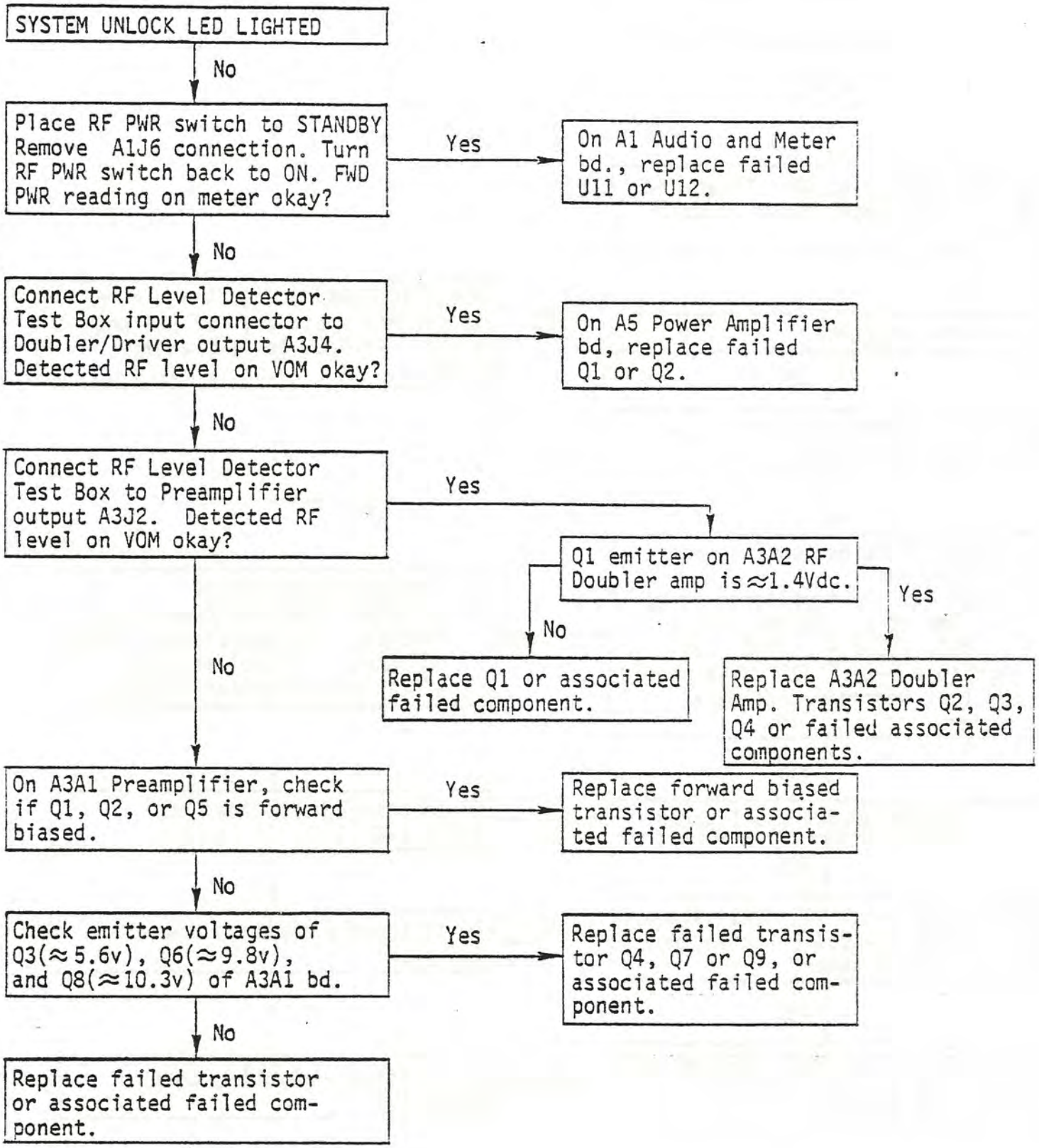

www.SteamPoweredRadio.Com

5.5.1.1-3

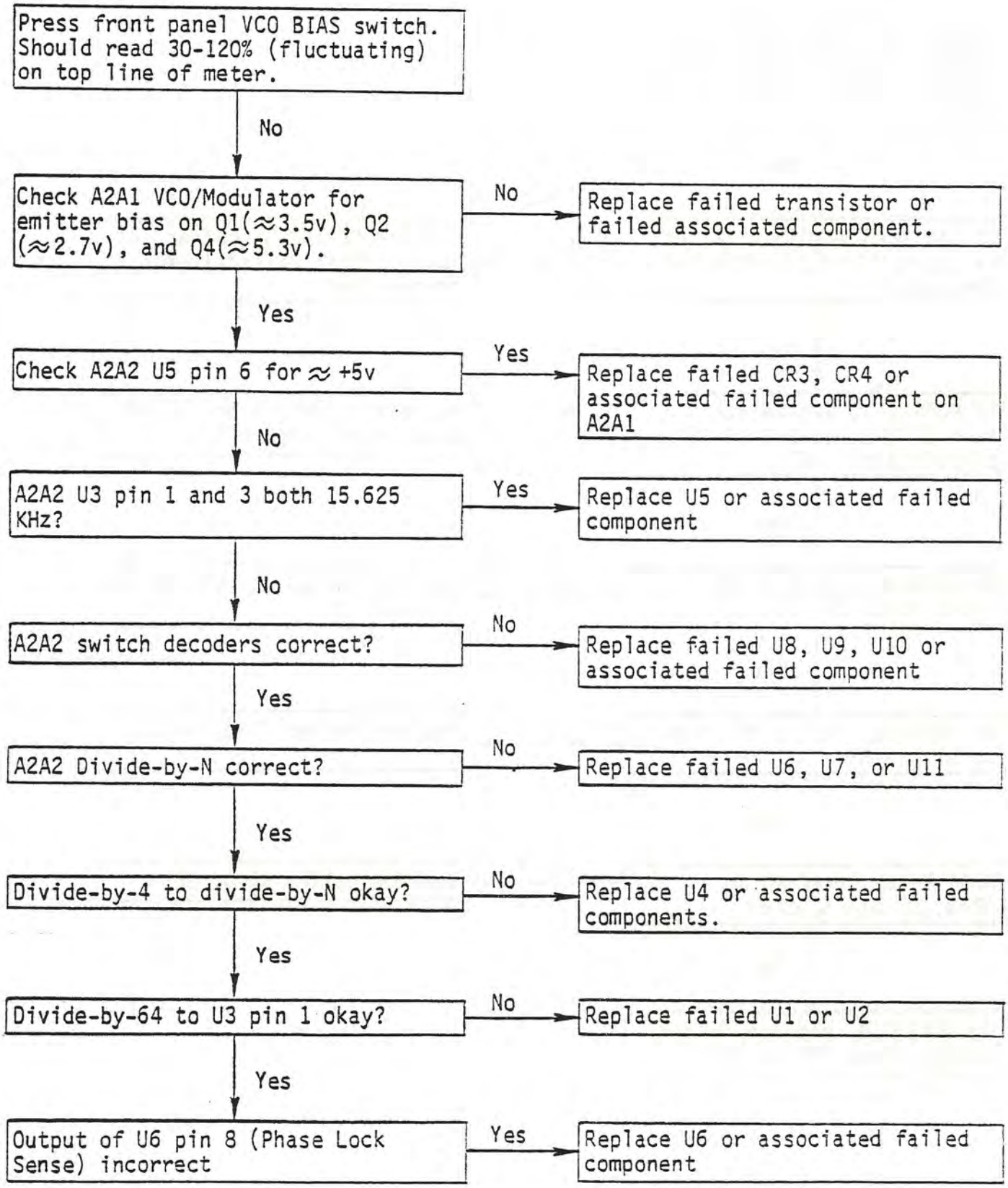

If You Didn't Get This From My Site,
Then It Was Stolen From...
www.SteamPoweredRadio.Com

5.5.1.1-4

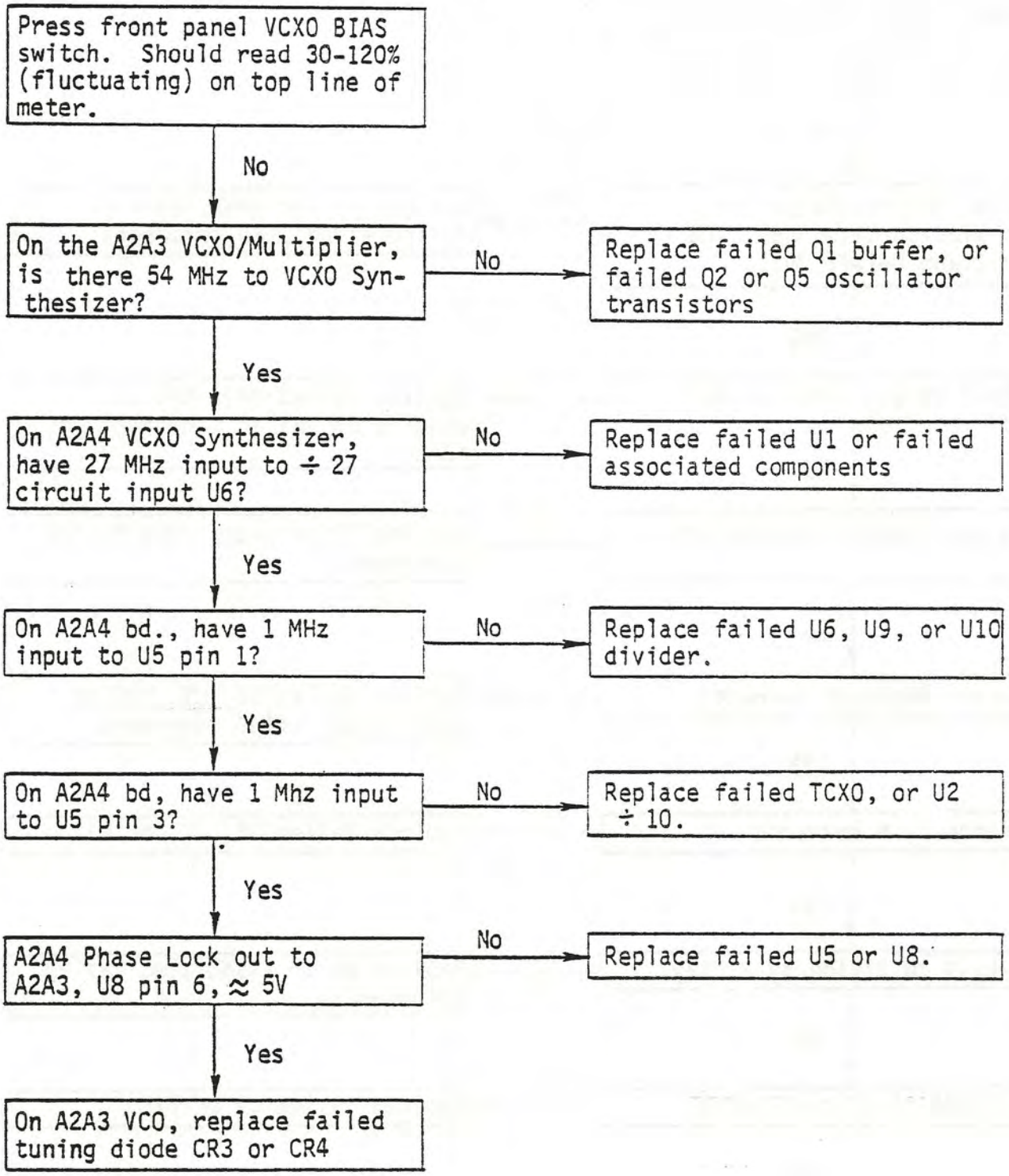

www.SteamPoweredRadio.Com

5.5.1.2 Low FWD PWR meter reading Trouble-shooting Tree

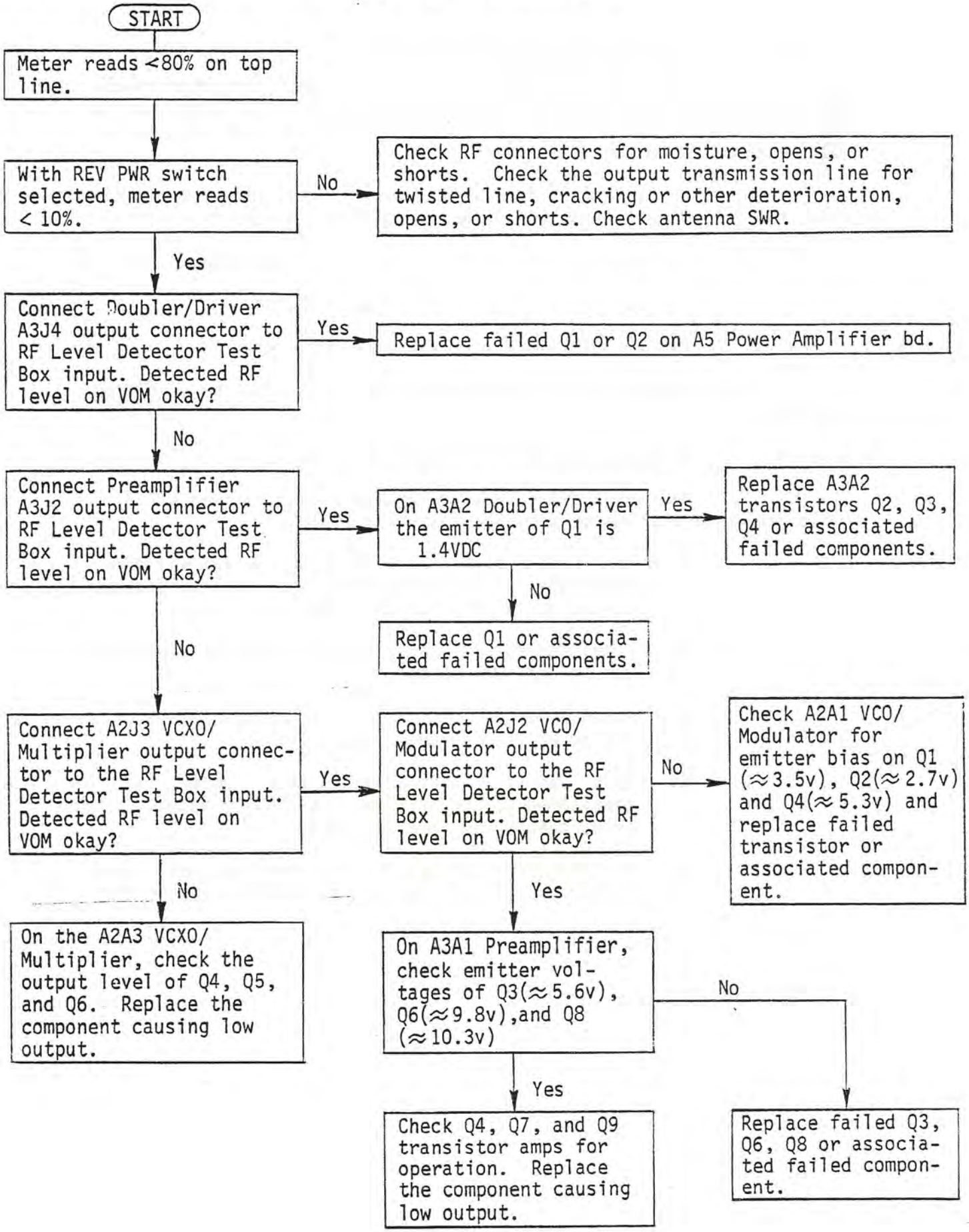

www.SteamPoweredRadio.Com

5.5.1.3 Program Audio Troubleshooting

With normal program material applied to the rear panel COMP INPUT or BALANCED INPUT connectors, select PRGM SIG switch on the front panel meter function switch. Meter should fluctuate between 20-100%, responding to the input audio.

If it doesn't remove the program input and with a VOM check the following IC's on the A1 Audio and Meter assembly:

A. U1-U7, LF356, pin 6 should be +6.0v±1.0Vdc.

B. U8, CA3140, pin 6 should be 0.6 Vdc.

C. U9, CA3140, pin 6 should be 0.2 Vdc.

Replace any IC whose output does not meet the specified dc level.

5.5.1.4 Multiplex Input Path Troubleshooting

The transmitter input multiplex signal path on the A1 Audio and Meter Amp assembly can be tested as follows:

A. Apply a 1.5 VP-P subcarrier (150 kHz ±20 kHz for composite, or 52 kHz ±5kHz for monaural multiplex) to the MUX 1 input on the rear panel.

B. Press the MUX SIG meter function switch. The meter should indicate 66.6%.

C. Move the MUX 1 input signal to the MUX 2 input. The meter should now indicate 33.3%.

D. Apply identical signals as in step A above simultaneously to both MUX 1 and MUX 2 inputs. The meter should now indicate 100%.

E. For any discrepancies in the above readings, check U6 and U7 circuits and replace faulty components.

www.SteamPoweredRadio.Com

5.5.1.5 Transmitter Automatic Changeover(TAC) Troubleshooting.

5.5.1.5-1

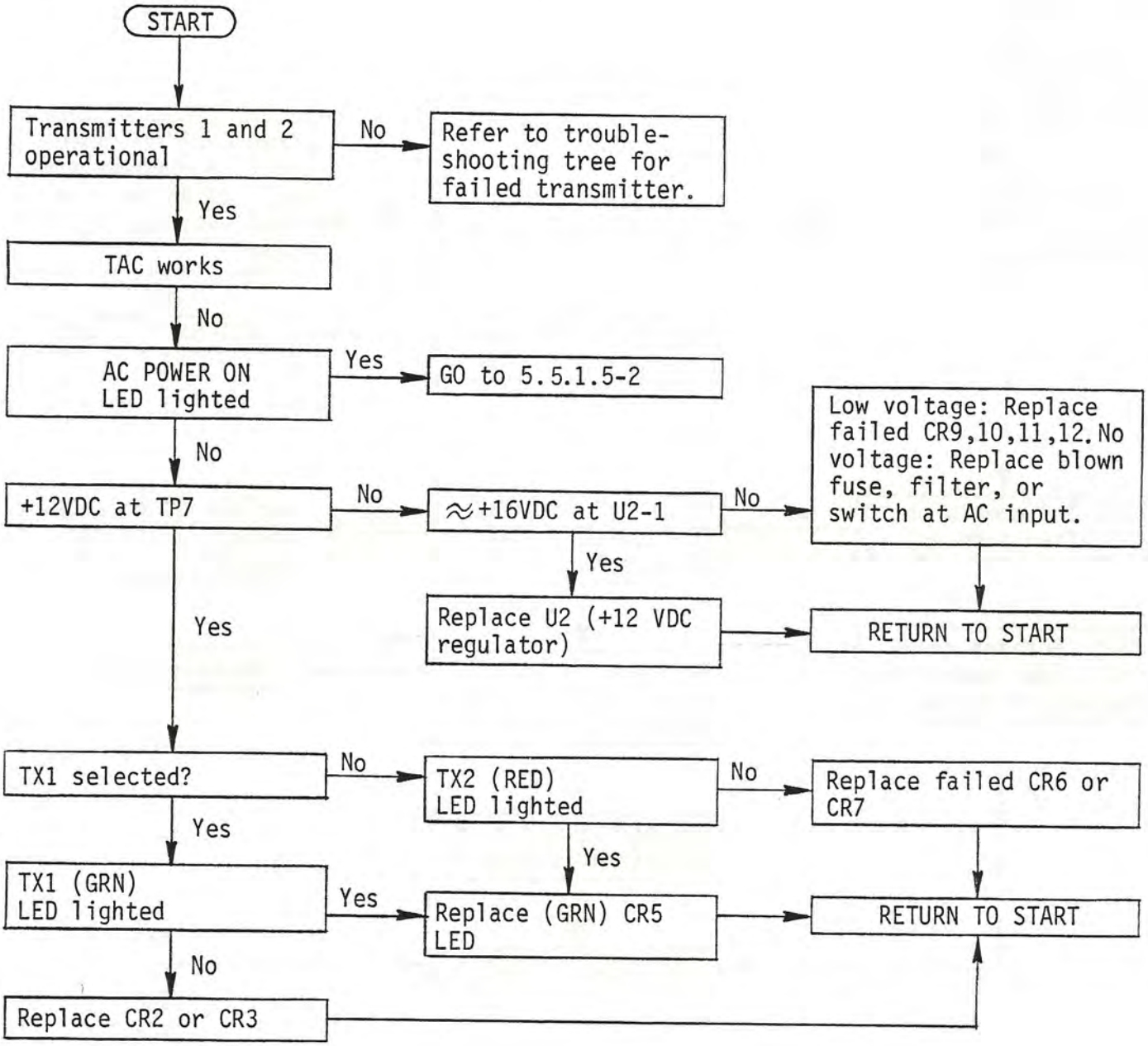

www.SteamPoweredRadio.Com

5.5.1.5-2

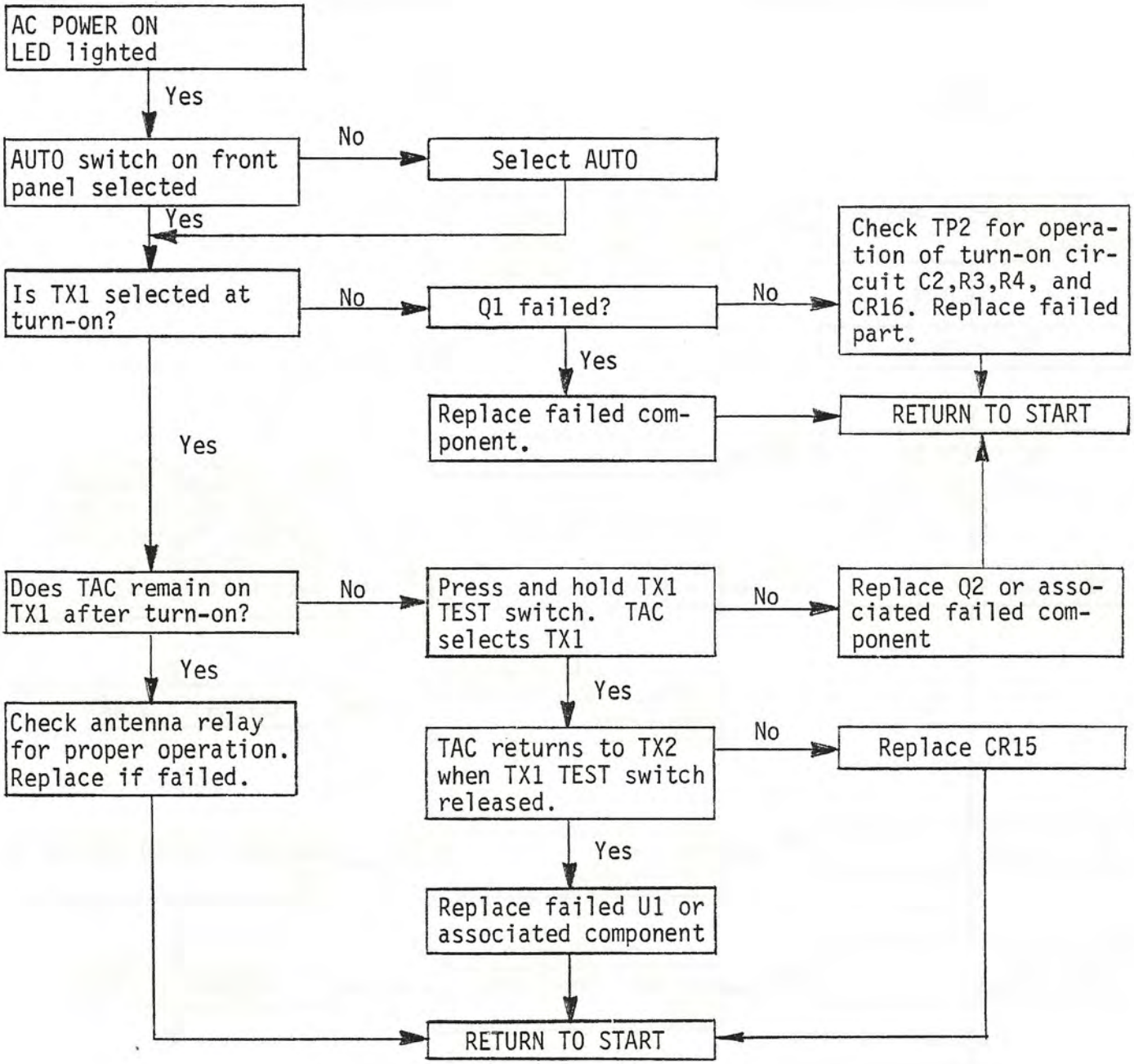

www.SteamPoweredRadio.Com

5.5.2 Receiver Troubleshooting

The following tests are designed to locate the faulty component causing a loss of signal, or a reduction in its level, in the receiver circuits.

NOTE

TO PREVENT DAMAGE TO RECEIVER CIRCUITS, THE INPUT AC POWER SHOULD BE DISCONNECTED WHEN REMOVING OR REPLACING PC BOARDS.

Since the front panel function meter switch has positions for both receiver A and receiver B, the receiver tests will reference only "receiver" positions for troubleshooting, without specifying either A or B. For example, if it is desired to check the multiplex input, it will be referenced as the MPx switch position.

www.SteamPoweredRadio.Com

5.5.2.1. Monaural Receiver Troubleshooting

5.5.2.1-1

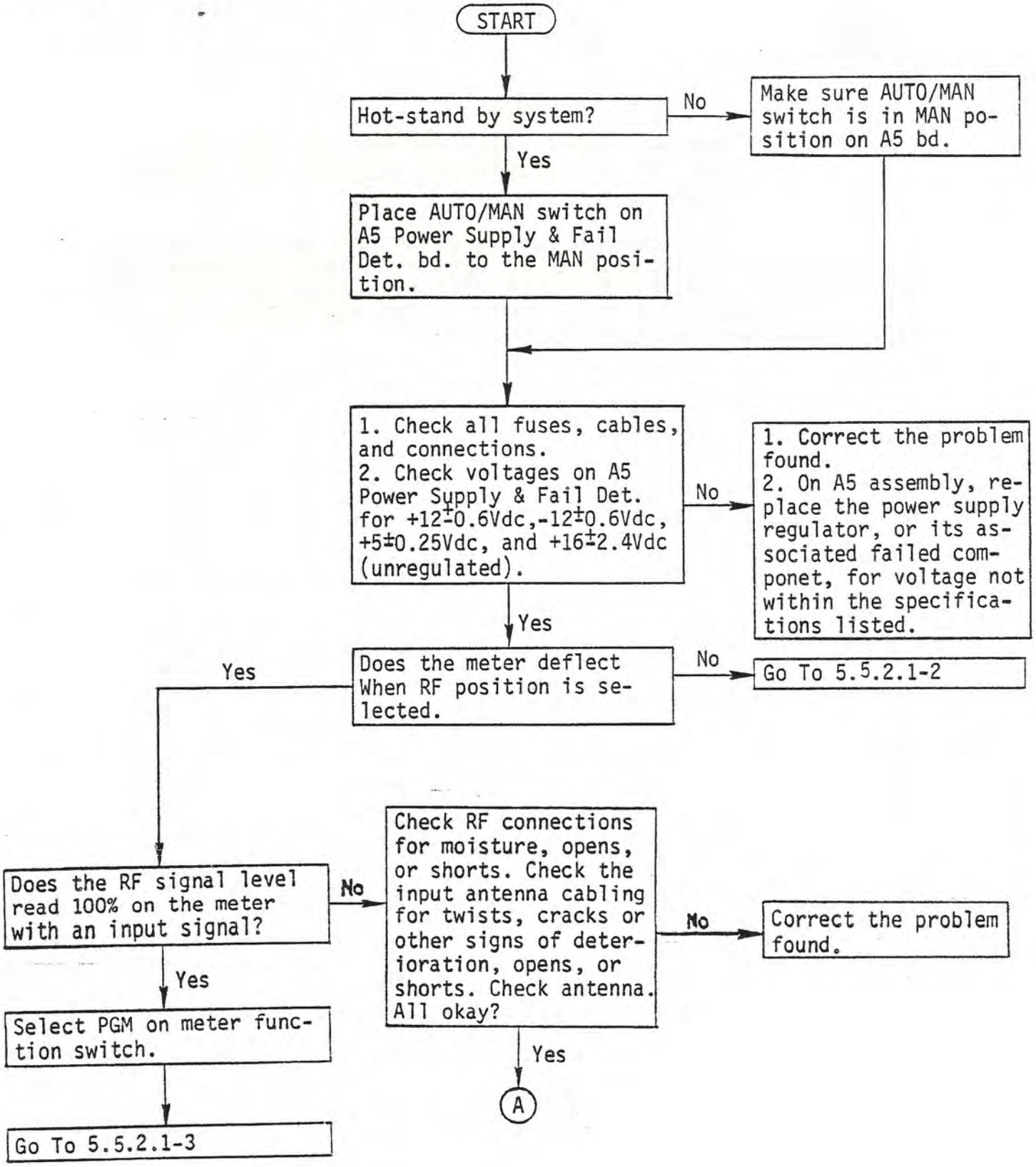

www.SteamPoweredRadio.Com

5.5.2.1-2

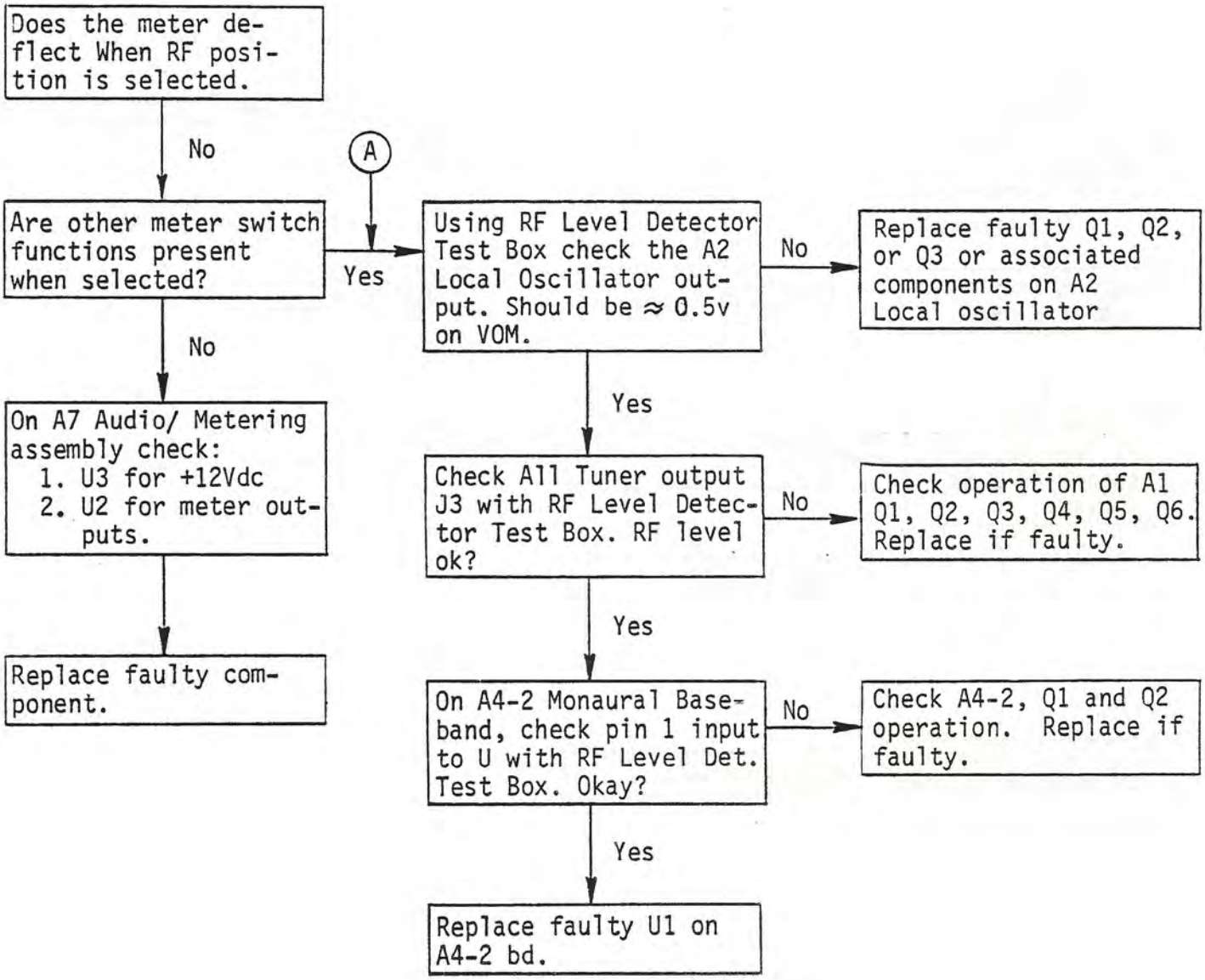

If You Didn't Get This From My Site,
Then It Was Stolen From...
www.SteamPoweredRadio.Com

5.5.2.1-3

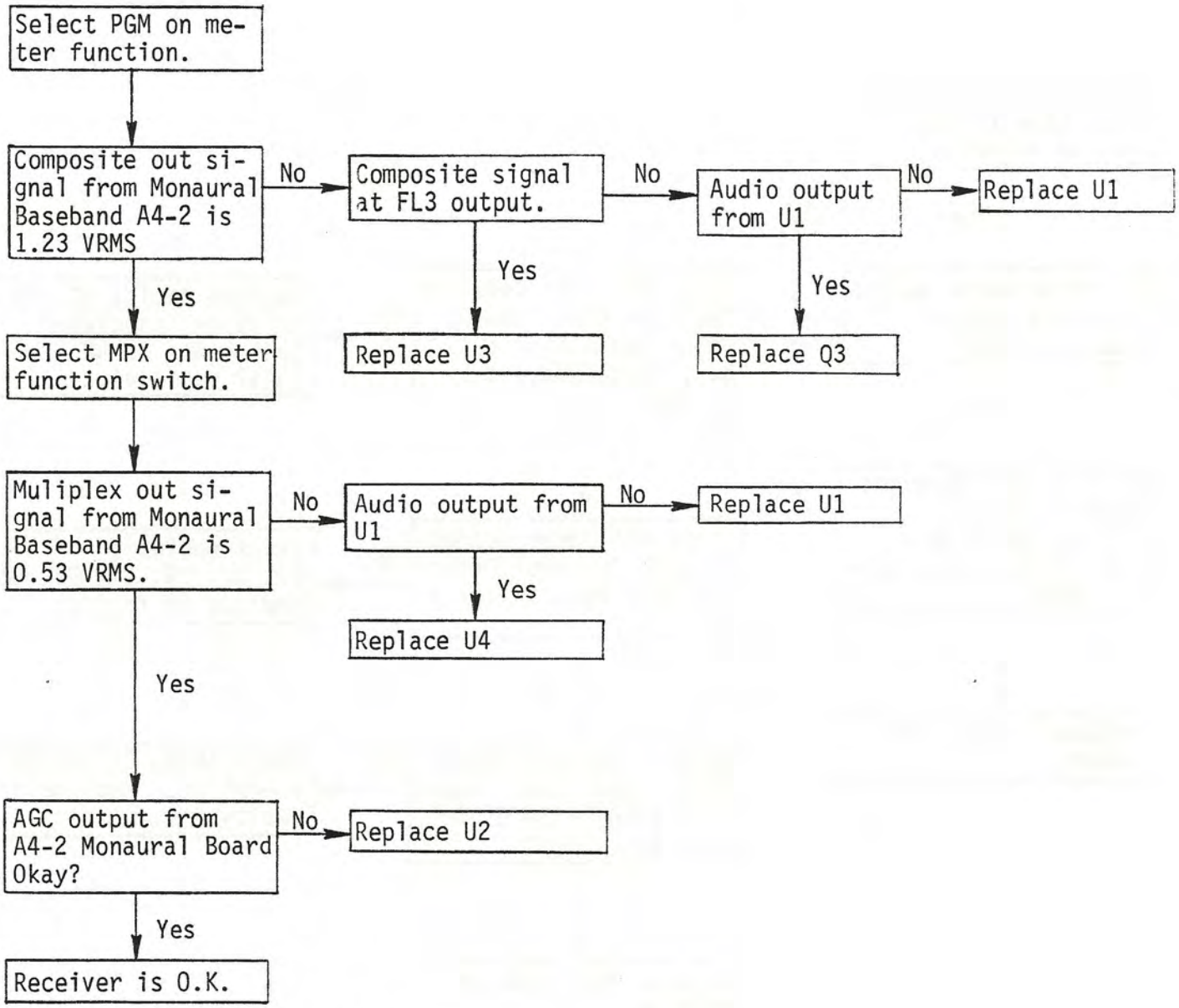

NOTE

For hot-standby systems, return A5 Auto/Man switch to the AUTO position before securing test.

www.SteamPoweredRadio.Com

5.5.2.2 Composite Receiver Troubleshooting

5.5.2.2-1

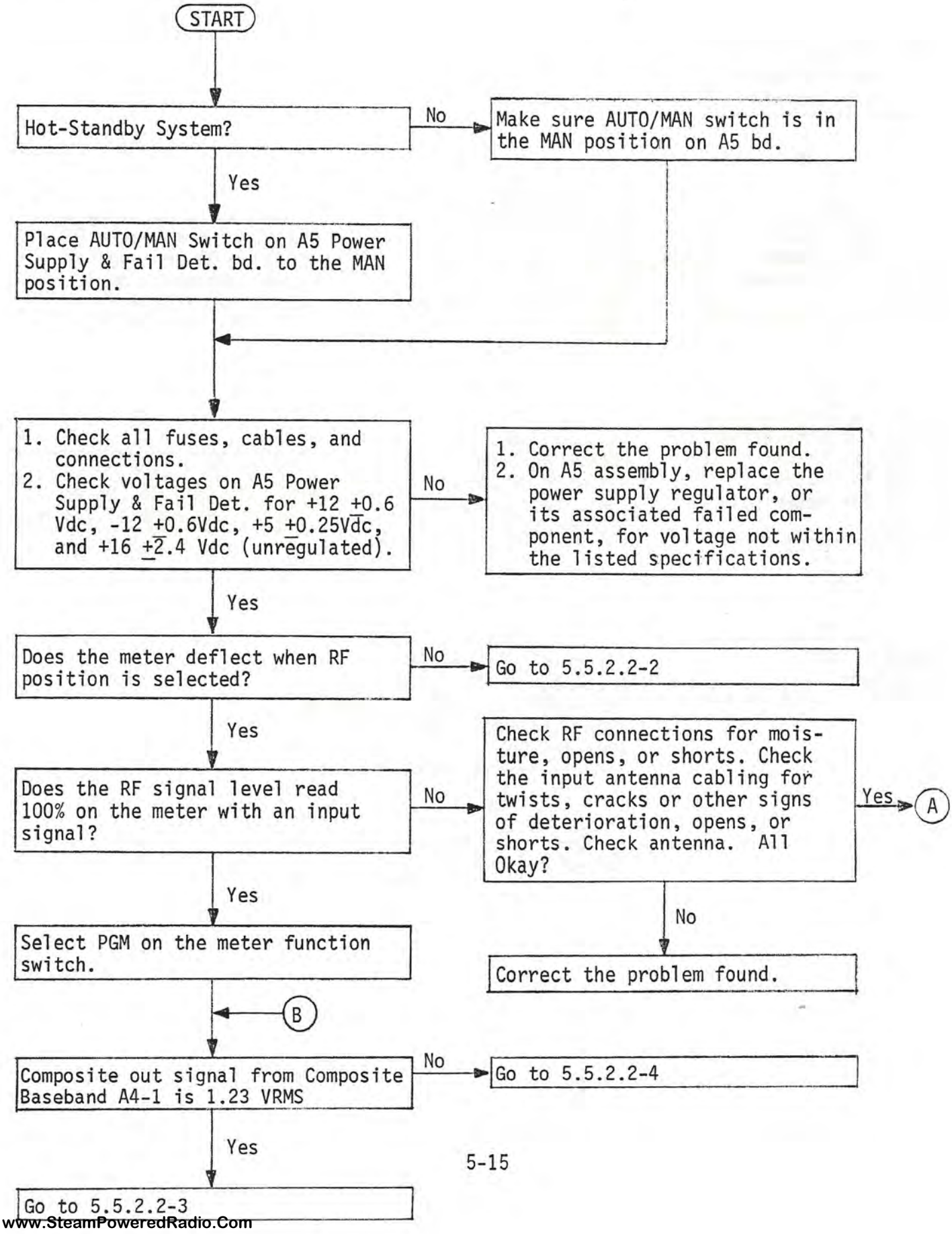

www.SteamPoweredRadio.Com

5.5.2.2-2

From 5.5.2.2-1

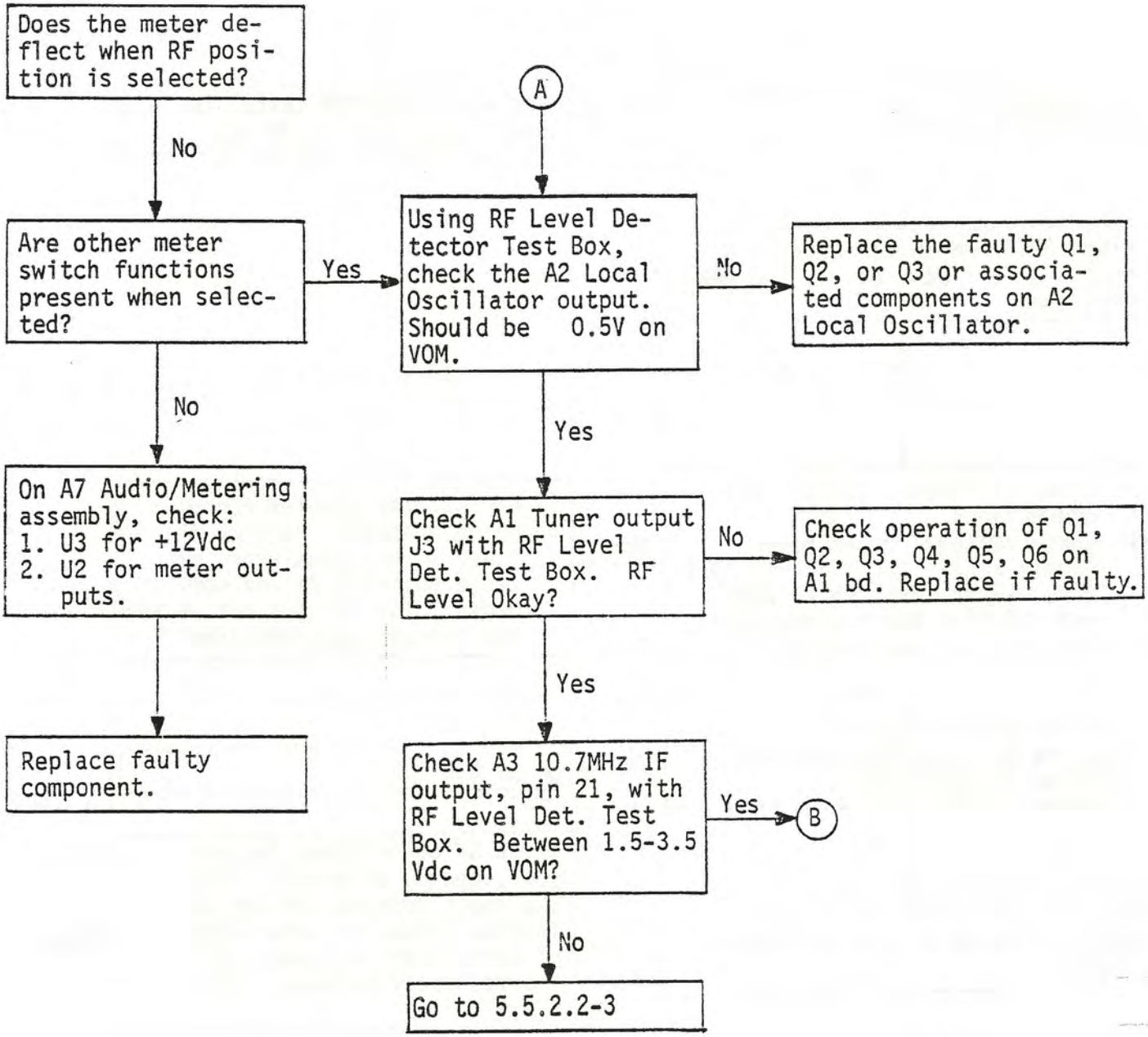

www.SteamPoweredRadio.Com

5.5.2.2-3

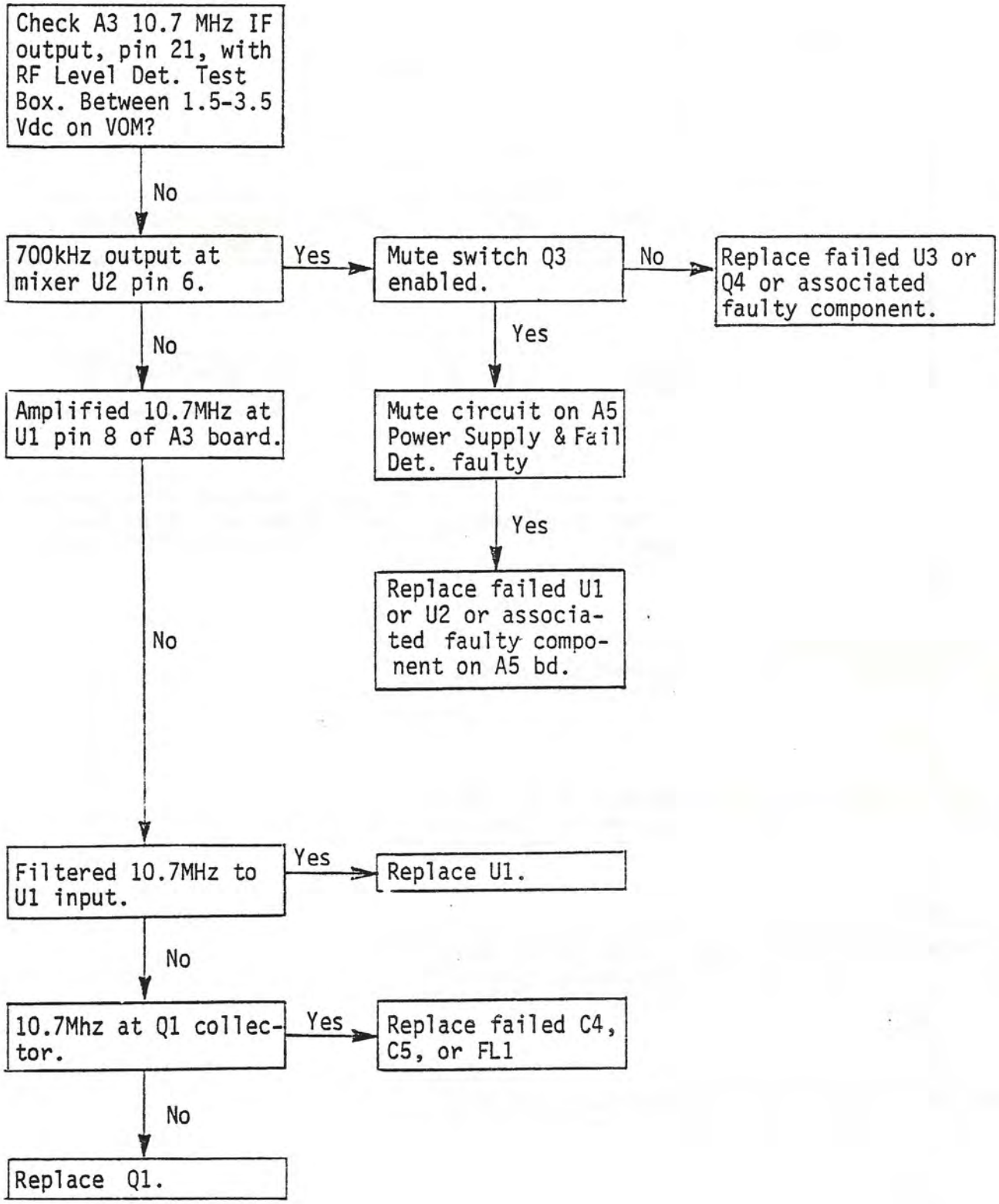

www.SteamPoweredRadio.Com

5.5.2.2-4

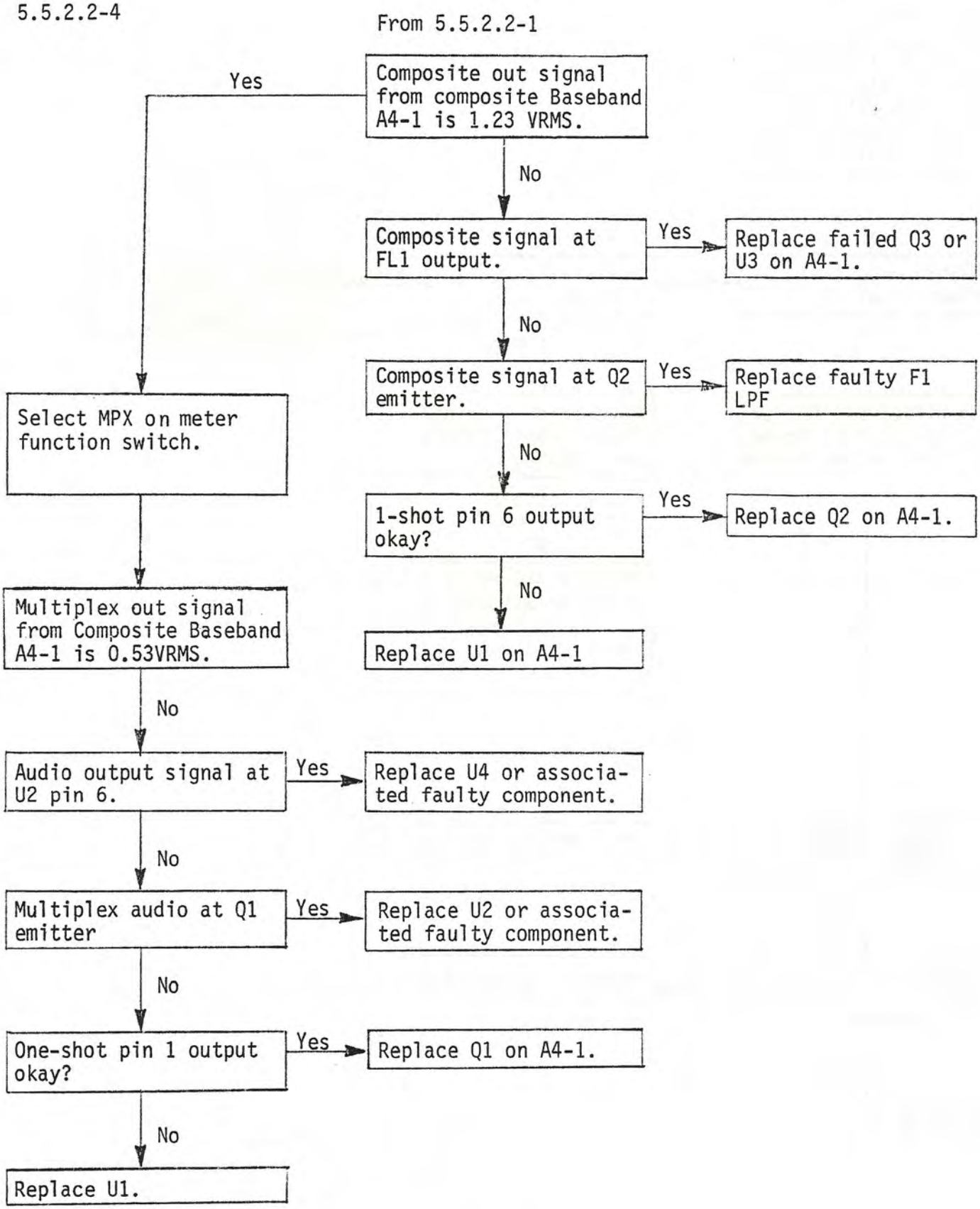

www.SteamPoweredRadio.Com

5.5.2.3. Receiver Automatic Changeover (RAC) Troubleshooting

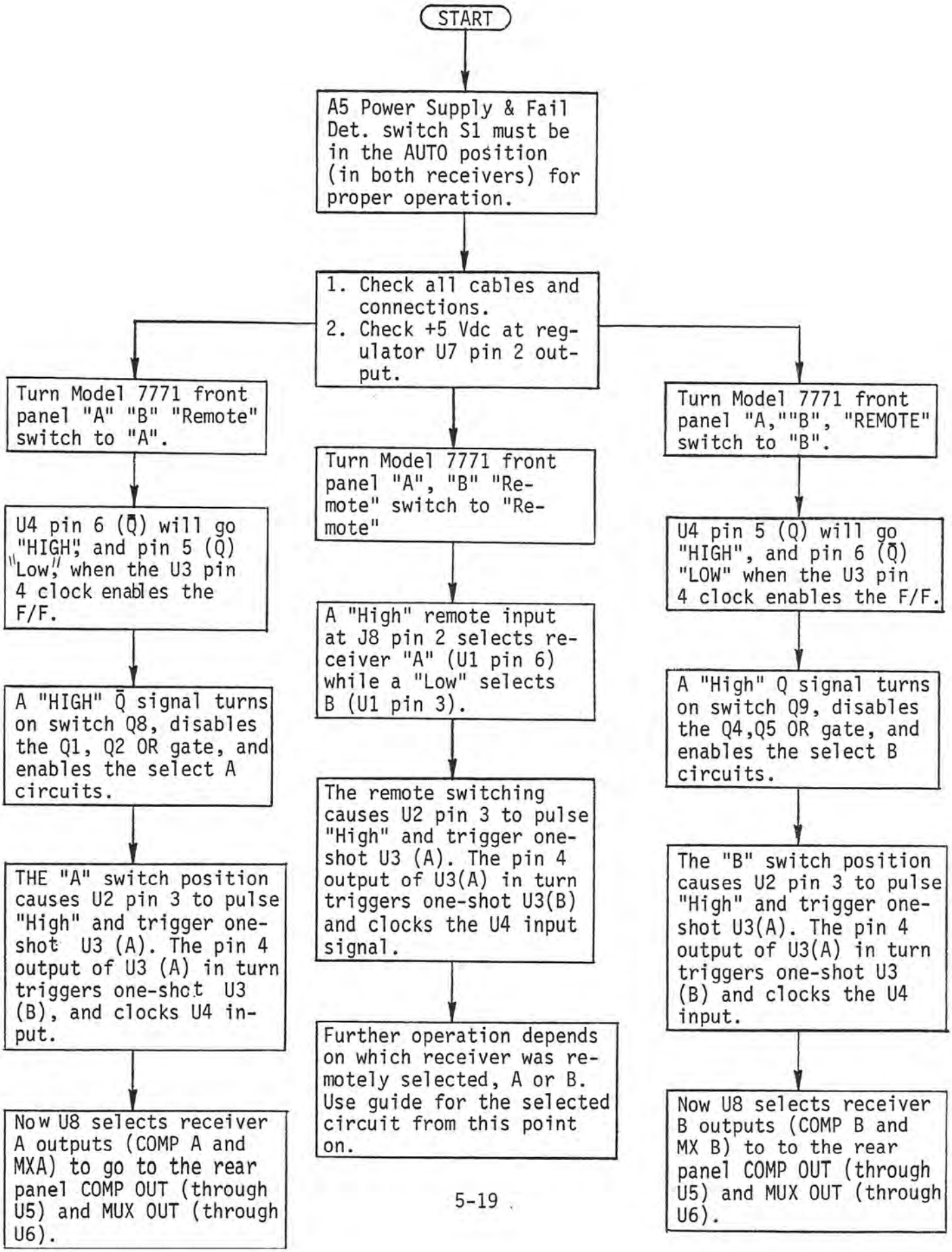

www.SteamPoweredRadio.Com

REVISIONS				
ZONE	REV.	DESCRIPTION	DATE	APPROVED
	A	REL FOR PRODUCTION	8/7/78	
	B	Redrawn and revised per ECO 782	5/30/79	[illegible]
	C	REV PER ECO 890	10/2/79	Ed Fo[illegible]

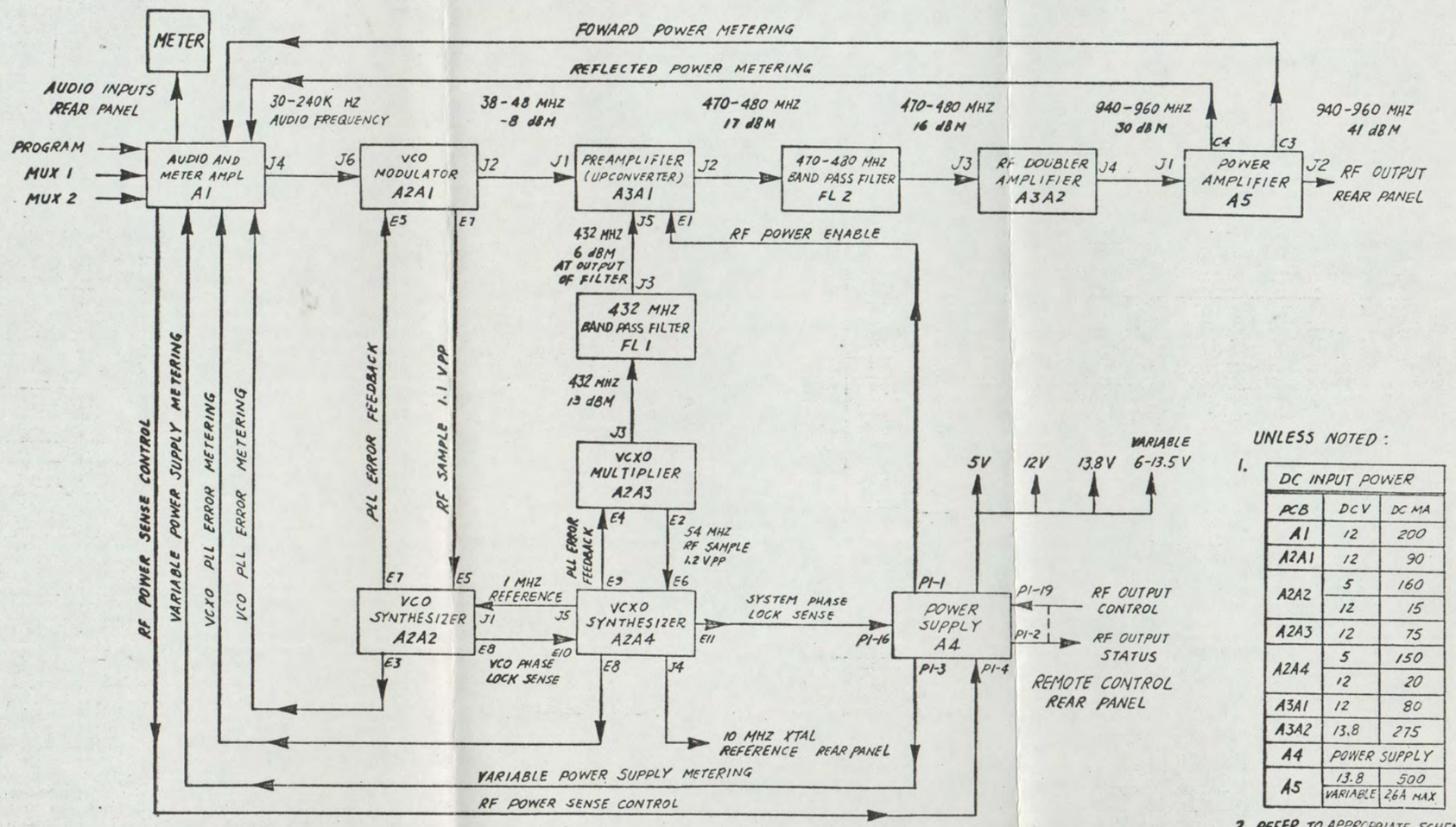

UNLESS NOTED:

1.

DC INPUT POWER		
PCB	DCV	DC MA
A1	12	200
A2A1	12	90
A2A2	5	160
	12	15
A2A3	12	75
A2A4	5	150
	12	20
A3A1	12	80
A3A2	13.8	275
A4	POWER SUPPLY	
A5	13.8	500
	VARIABLE	26A MAX

2. REFER TO APPROPRIATE SCHEMATIC FOR PIN NUMBERS NOT SHOWN.

QTY REQD	CODE IDENT	PART OR IDENTIFYING NO.	NOMENCLATURE OR DESCRIPTION	MATERIAL SPECIFICATION

PARTS LIST

NEXT ASSY	USED ON
5004-7700	7700

APPLICATION

UNLESS OTHERWISE SPECIFIED DIMENSIONS ARE IN INCHES TOLERANCES ARE: FRACTIONS ± DECIMALS .XX ± .XXX ± ANGLES ±

MATERIAL

FINISH

DO NOT SCALE DRAWING

CONTRACT NO.

APPROVALS		DATE
DRAWN	Anna Chen	5/30/79
CHECKED	[illegible]	5/30/79
ISSUED APPR	[illegible]	5-30-79

MEM TIME & FREQUENCY TECHNOLOGY INC.

STL TRANSMITTER BLOCK DIAGRAM, FIG. 6-1

SIZE C | FSCM NO. | DWG. NO. 6600-1690 | REV. C

SCALE ~ | SHEET 1 OF 1

DWG. NO. 6600-1690 | SH 1 | REV C

If You Didn't Get This From My Site, Then It Was Stolen From...
www.SteamPoweredRadio.Com

BISHOP GRAPHICS/ACCUPRESS REORDER NO. A-4106

NEXT ASSY	USED ON
5004-0770	7703

REVISIONS

SYM	DESCRIPTION	DR	CHK	AUTH	DATE
A	REL TO PROD			487	11/21/73
B	REVISED PER ECO			555	2/5/79

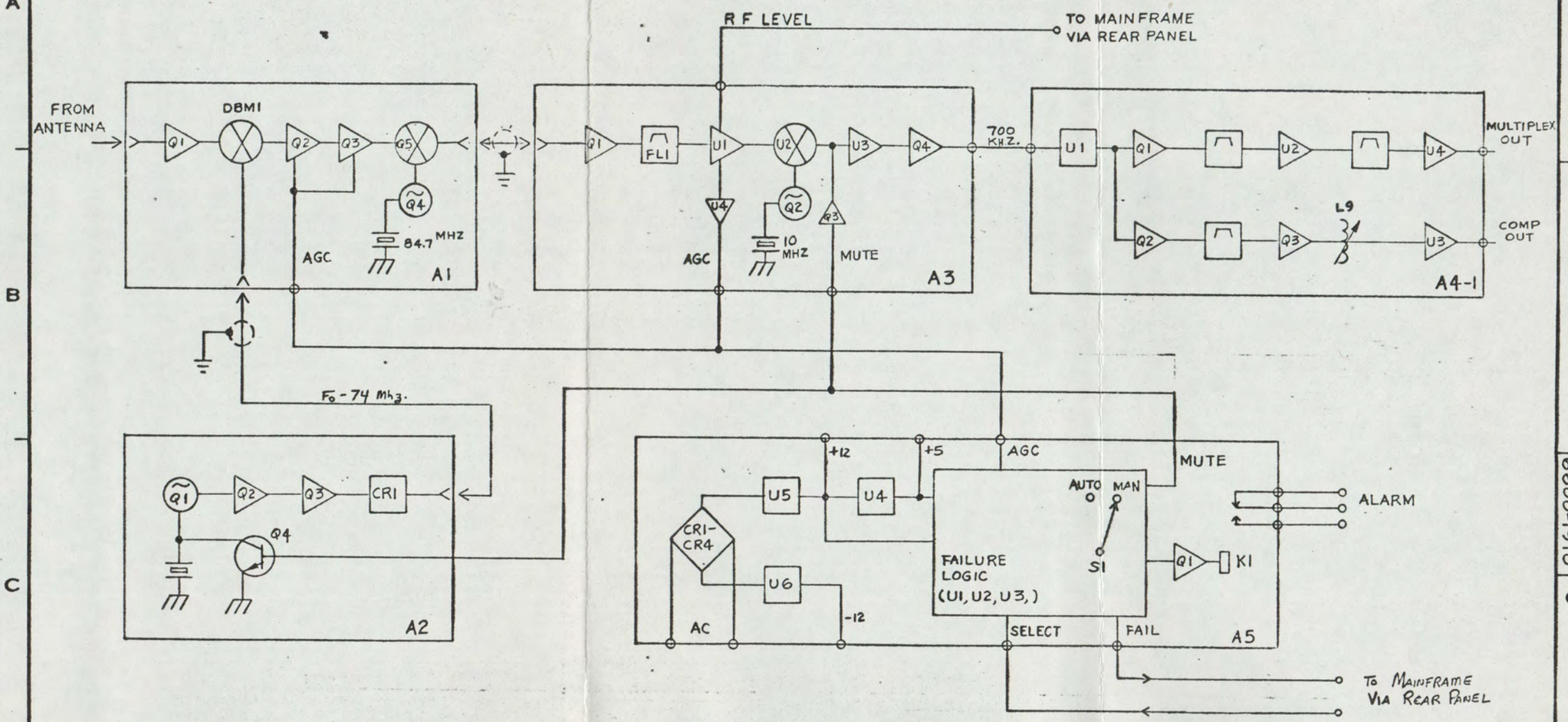

FIG 6-2-1

QTY PER ASSY	ITEM NO.	EN NO.	PART NO.	DESCRIPTION	REF. DES.

LIST OF MATERIALS

REMOVE ALL BURRS AND SHARP EDGES

TOLERANCES UNLESS OTHERWISE SPECIFIED
.XX ±
.XXX ±
ANGULAR ±

DO NOT SCALE THIS PRINT

DRAWN BY		DATE 11/21/73
CHK BY		11/27/73
PROJ. ENG.		11/27/73
MFG. ENG.		
APPD.		
APPD.		
ECO NO.		

TFT TIME & FREQUENCY TECHNOLOGY INC
3000 Olcott St., Santa Clara, California 95051
(408) 246-6365

TITLE
BLOCK DIAGRAM
MODEL 7703 RCVR

SIZE C | DRAWING NO 6600-1910 | REV B
SCALE NONE | SHT 1 OF 1

DWG. NO. 6600-1910

www.SteamPoweredRadio.Com

BISHOP GRAPHICS/ACCUPRESS REORDER NO. A-8835

REVISIONS				
ZONE	REV	DESCRIPTION	DATE	APPROVED
	A	REMOVED SK	11/28/79	[illegible]

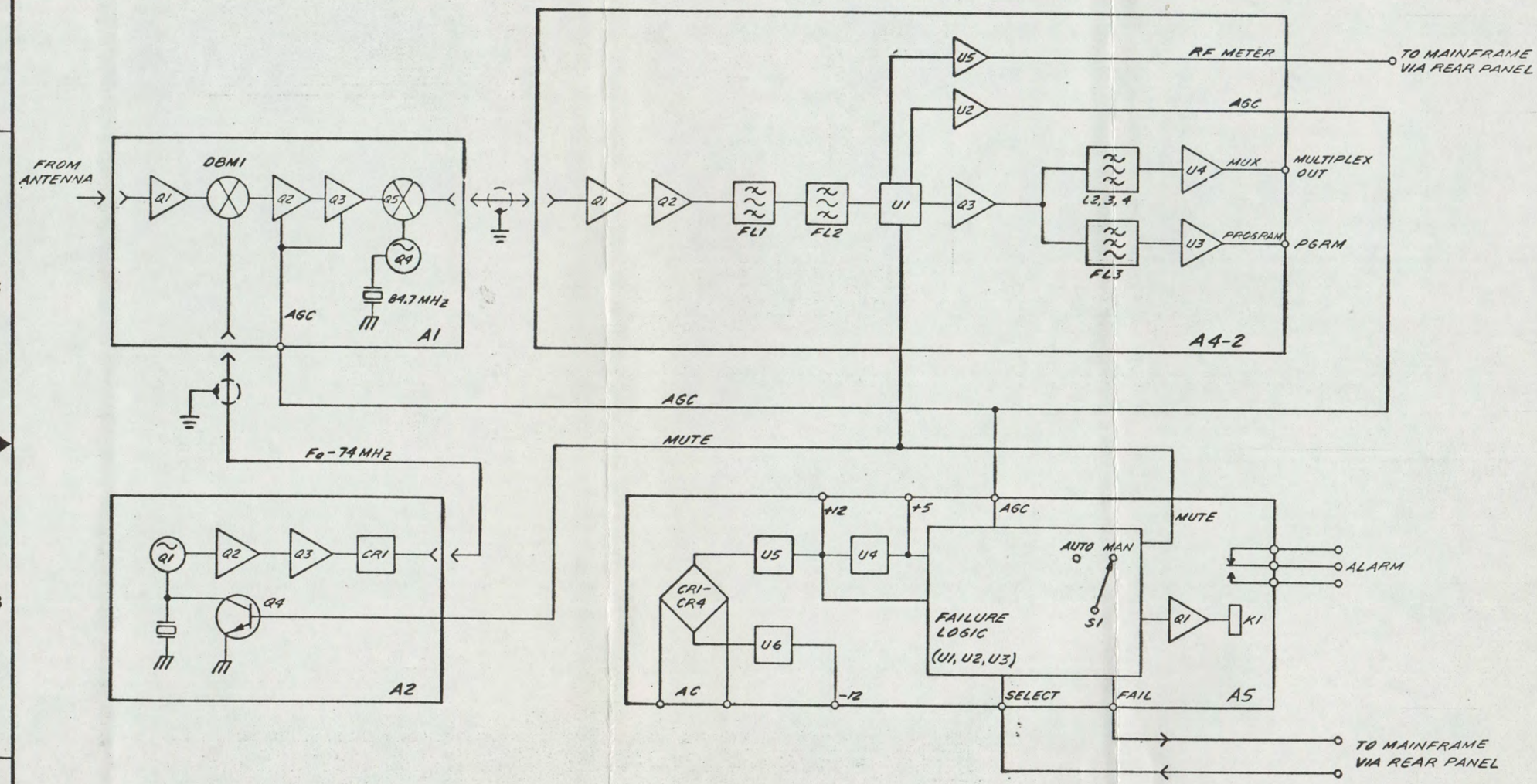

FIG 6-2-2

QTY REQD	CODE IDENT	PART OR IDENTIFYING NO.	NOMENCLATURE OR DESCRIPTION	MATERIAL SPECIFICATION

PARTS LIST

UNLESS OTHERWISE SPECIFIED DIMENSIONS ARE IN INCHES
TOLERANCES ARE:
FRACTIONS ± ——— DECIMALS .XX ± ——— .XXX ± ——— ANGLES ± ———

MATERIAL

FINISH

DO NOT SCALE DRAWING

CONTRACT NO.

APPROVALS	DATE
DRAWN KK	11/28/79
CHECKED [illegible]	11/28/79
ISSUED M. Baker	11/28/79

MEM TIME & FREQUENCY TECHNOLOGY INC.

BLOCK DIAGRAM
MODEL 7701 RCVR

SIZE	FSCM NO.	DWG. NO.	REV.
C		6600-2143	A

SCALE NONE SHEET 1 OF 1

NEXT ASSY	USED ON
5004-7700	7701

APPLICATION

DWG. NO. 6600-2143 SH 1/1 REV. A

www.SteamPoweredRadio.Com

BISHOP GRAPHICS/ACCUPRESS REORDER NO. A-4106

NEXT ASSY	USED ON
6608-2070	7700

REVISIONS

SYM	DESCRIPTION	DR	CHK	AUTH	DATE
B	[illegible]	[illegible]	[illegible]	[illegible]	
C	REV PER ECO 654	Ac	[illegible]	[illegible]	[illegible]
D	REV PER ECO 942	MY	[illegible]	[illegible]	[illegible]

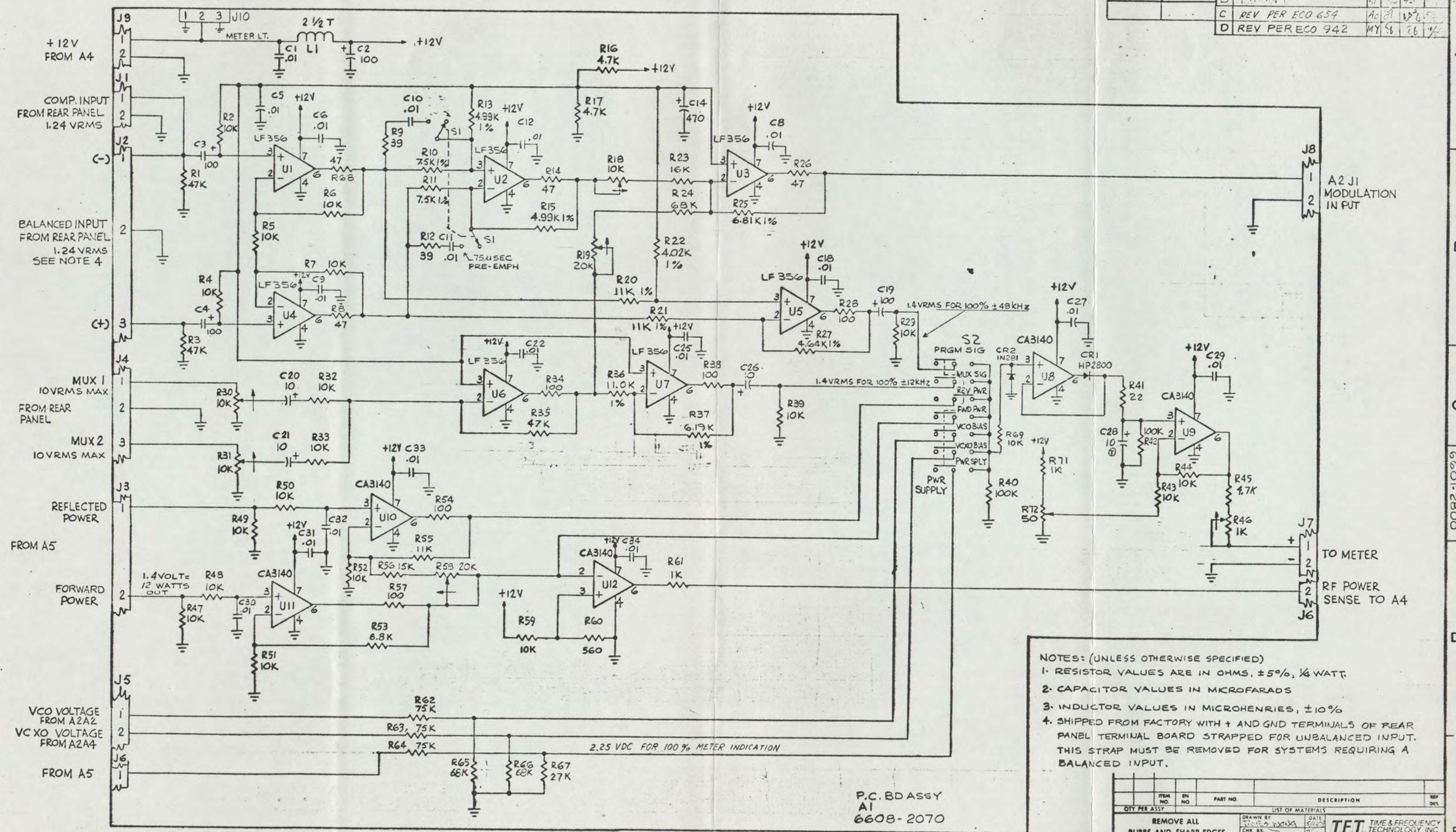

NOTES: (UNLESS OTHERWISE SPECIFIED)

1. RESISTOR VALUES ARE IN OHMS, ±5%, 1/4 WATT.
2. CAPACITOR VALUES IN MICROFARADS
3. INDUCTOR VALUES IN MICROHENRIES, ±10%
4. SHIPPED FROM FACTORY WITH + AND GND TERMINALS OF REAR PANEL TERMINAL BOARD STRAPPED FOR UNBALANCED INPUT. THIS STRAP MUST BE REMOVED FOR SYSTEMS REQUIRING A BALANCED INPUT.

QTY PER ASSY	ITEM NO.	EN NO.	PART NO.	DESCRIPTION	REF DES

LIST OF MATERIALS

REMOVE ALL BURRS AND SHARP EDGES

TOLERANCES UNLESS OTHERWISE SPECIFIED .XX± ~ .XXX± ~ ANGULAR ± ~

DO NOT SCALE THIS PRINT

DRAWN BY [illegible] DATE 5/22/78
CHK BY [illegible] 7/7/78
PROJ ENG [illegible]
MFG ENG [illegible] 8/6/78
APPD [illegible]
APPD
SCO NO 461

TFT TIME & FREQUENCY TECHNOLOGY INC
3000 Olcott St. Santa Clara California 95050 (408) 246-6365

TITLE AUDIO AND METER AMP A1

SIZE D DRAWING NO 6601-2800 REV D
SCALE NONE SHT 1 OF 1

FIG. 6-3

If You Didn't Get This From My Site, Then It Was Stolen From...
www.SteamPoweredRadio.Com

NEXT ASSY	USED ON
5109-0771	7700

REVISIONS

SYM	DESCRIPTION	DR	CHK	AUTH	DATE
A	REL FOR PRODUCTION	JK		461	[illegible]
B	REV PER ECO	MY	[illegible]	665	[illegible]

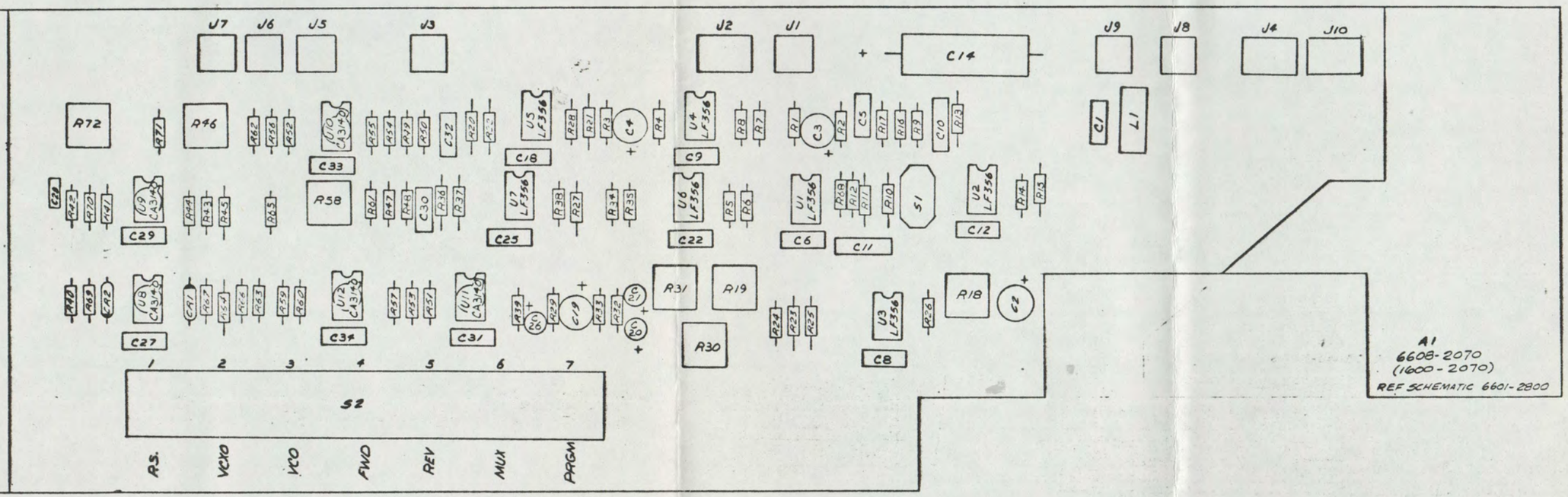

ITEM NO.	EN NO	PART NO.	DESCRIPTION	REF DES
QTY PER ASSY			LIST OF MATERIALS	

REMOVE ALL BURRS AND SHARP EDGES

TOLERANCES UNLESS OTHERWISE SPECIFIED
.XX ±
.XXX ±
ANGULAR ±

DO NOT SCALE THIS PRINT

		DATE
DRAWN BY	KK	
CHK BY		
PRO ENG		
MFG ENG		
APPD		
APPD		
ECO NO		

TFT TIME & FREQUENCY TECHNOLOGY INC
3000 Olcott St Santa Clara California 95050
(408) 246-6365

TITLE AUDIO & METER AMPLIFIER BD A1

SIZE D | DRAWING NO 6600-2070 | REV B

SCALE | SHT 1 OF 1

www.SteamPoweredRadio.Com

WORKSHOP GRAPHICS ACCUPRESS REORDER NO. A-1538

Model 7700 Audio and Meter Amp A1 Assembly #6608-2070
Rev B

CKT REF	DESCRIPTION	QTY	TFT STOCK NO.
C1	Cap Cer Disc .01 UF 20V 10%	1	1005-1039
C2	Cap Tant 100 UF 20V 20%	1	1008-0102
C3	Cap Tant 100 UF 20V 20%	1	1008-0102
C4	Cap Tant 100 UF 20V 20%	1	1008-0102
C5	Cap Cer Disc .01 UF 20%	1	1005-1039
C6	Cap Cer Disc .01 UF	1	1005-1039
C7	Not used		
C8	Cap Cer Disc .01 UF	1	1005-1039
C9	Cap Cer Disc .01 UF	1	1005-1039
C10	Cap Poly .01 UF 100V	1	1002-0011
C11	Cap Poly .01 UF 100V	1	1002-0011
C12	Cap Cer Disc .01 UF	1	1005-1039
C13	Not used		
C14	Cap elect 470 UF	1	1010-0471
C15	Not used		
C16	Not used		
C17	Not used		
C18	Cap Cer Disc .01 UF	1	1005-1039
C19	Cap Tant 100 UF 20V 20%	1	1008-0102
C20	Cap Tant 10 UF 20V 10%	1	1008-0100
C21	Cap Tant 10 UF 20V 10%	1	1008-0100
C22	Cap Cer Disc .01 UF	1	1005-1039
C23	Not used		
C24	Not used		
C25	Cap Cer Disc .01 UF	1	1005-1039
C26	Cap Tant 10 UF 20V 10%	1	1008-0100
C27	Cap Cer Disc .01 UF	1	1005-1039
C28	Cap Tant 10 UF 20V 10%	1	1008-0100
C29	Cap Cer Disc .01 UF	1	1005-1039
C30	Cap Cer Disc .01 UF	1	1005-1039
C31	Cap Cer Disc .01 UF	1	1005-1039
C32	Cap Cer Disc .01 UF	1	1005-1039
C33	Cap Cer Disc .01 UF	1	1005-1039
C34	Cap Cer Disc .01 UF	1	1005-1039
CR1	Dio HP2800	1	1282-2800
CR2	Dio 1N281	1	1280-0281
J1	Plug 2 Pin	1	2250-6002
J2	Plug 3 Pin	1	2250-6003

www.SteamPoweredRadio.Com

CKT REF	DESCRIPTION	QTY	TFT STOCK NO.
J3	Plug 2 Pin	1	2250-6002
J4	Plug 3 Pin	1	2250-6003
J5	Plug 2 Pin	1	2250-6002
J6	Plug 2 Pin	1	2250-6002
J7	Plug 2 Pin	1	2250-6002
J8	Plug 2 Pin	1	2250-6002
J9	Plug 2 Pin	1	2250-6002
J10	Plug 3 Pin	1	2250-6003
L1	Choke RF 2 1/2 Turn	1	1530-0025
R1	Res Car Comp 1/4W 5% 47K	1	1065-4702
R2	Res Car Comp 1/4W 5% 10K	1	1065-1002
R3	Res Car Comp 1/4W 5% 47K	1	1065-4702
R4	Res Car Comp 1/4W 5% 10K	1	1065-1002
R5	Res Car Comp 1/4W 5% 10K	1	1065-1002
R6	Res Car Comp 1/4W 5% 10K	1	1065-1002
R7	Res Car Comp 1/4W 5% 10K	1	1065-1002
R8	Res Car Comp 1/4W 5% 47	1	1065-0047
R9	Res Car Comp 1/4W 5% 39	1	1065-0039
R10	Res MT FLM 1/8W 1% 7.5K	1	1061-7501
R11	Res MT FLM 1/8W 1% 7.5K	1	1061-7501
R12	Res Car Comp 1/4W 5% 39	1	1065-0039
R13	Res MT FLM 1/8W 1% 4.99K	1	1065-4991
R14	Res Car Comp 1/4W 5% 47	1	1065-0047
R15	Res MT FLM 1/8W 1% 4.99K	1	1065-4991
R16	Res Car Comp 1/4W 5% 4.7K	1	1065-4701
R17	Res Car Comp 1/4W 5% 4.7K	1	1065-4701
R18	Res Var PC MT 10K 1T	1	1072-1002
R19	Res Var PC MT 20K 1T	1	1072-2002
R20	Res MT FLM 1/8W 1% 11K	1	1061-1102
R21	Res MT FLM 1/8W 1% 11K	1	1061-1102
R22	Res MT FLM 1/8W 1% 4.02K	1	1061-4021
R23	Res Car Comp 1/4W 5% 16K	1	1065-1602
R24	Res Car Comp 1/4W 5% 68K	1	1065-6802
R25	Res MT FLM 1/8W 1% 6.81K	1	1061-6811
R26	Res Car Comp 1/4W 5% 47	1	1065-0047
R27	Res MT FLM 1/8W 1% 4.64K	1	1061-4641
R28	Res Car Comp 1/4W 5% 100	1	1065-0100
R29	Res Car Comp 1/4W 5% 10K	1	1065-1002
R30	Res Var PC MT 10K 1T	1	1072-1002
R31	Res Var PC MT 10K 1T	1	1072-1002

www.SteamPoweredRadio.Com

CKT REF	DESCRIPTION	QTY	TFT STOCK NO.
R32	Res Car Comp 1/4W 5% 10K	1	1065-1002
R33	Res Car Comp 1/4W 5% 10K	1	1065-1002
R34	Res Car Comp 1/4W 5% 100	1	1065-0100
R35	Res Car Comp 1/4W 5% 47	1	1065-4702
R36	Res MT FLM 1/8W 1% 11K	1	1061-1102
R37	Res MT FLM 1/8W 1% 6.19K	1	1061-6191
R38	Res Car Comp 1/4W 5% 100	1	1065-0100
R39	Res Car Comp 1/4W 5% 10K	1	1065-1002
R40	Res Car Comp 1/4W 5% 100K	1	1065-1003
R41	Res Car Comp 1/4W 5% 22	1	1065-0022
R42	Res Car Comp 1/4W 5% 100K	1	1065-1003
R43	Res Car Comp 1/4W 5% 10K	1	1065-1002
R44	Res Car Comp 1/4W 5% 10K	1	1065-1002
R45	Res Car Comp 1/4W 5% 4.7K	1	1065-4701
R46	Res Var PC MT 1K 1T	1	1072-1001
R47	Res Car Comp 1/4W 5% 10K	1	1065-1002
R48	Res Car Comp 1/4W 5% 10K	1	1065-1002
R49	Res Car Comp 1/4W 5% 10K	1	1065-1002
R50	Res Car Comp 1/4W 5% 10K	1	1065-1002
R51	Res Car Comp 1/4W 5% 10K	1	1065-1002
R52	Res Car Comp 1/4W 5% 10K	1	1065-1002
R53	Res Car Comp 1/4W 5% 6.8K	1	1065-6801
R54	Res Car Comp 1/4W 5% 100	1	1065-0100
R55	Res Car Comp 1/4W 5% 11K	1	1065-1102
R56	Res Car Comp 1/4W 5% 15K	1	1065-1502
R57	Res Car Comp 1/4W 5% 100	1	1065-0100
R58	Res Var PC MT 20K 1T	1	1072-2002
R59	Res Car Comp 1/4W 5% 10K	1	1065-1002
R60	Res Car Comp 1/4W 5% 560	1	1065-0560
R61	Res Car Comp 1/4W 5% 1K	1	1065-1001
R62	Res Car Comp 1/4W 5% 75K	1	1065-7502
R63	Res Car Comp 1/4W 5% 75K	1	1065-7502
R64	Res Car Comp 1/4W 5% 75K	1	1065-7502
R65	Res Car Comp 1/4W 5% 68K	1	1065-6802
R66	Res Car Comp 1/4W 5% 68K	1	1065-6802
R67	Res Car Comp 1/4W 5% 27K	1	1065-2702
R68	Res Car Comp 1/4W 5% 47	1	1065-0047
R69	Res Car Comp 1/4W 5% 10K	1	1065-1002
R71	Res Car Comp 1/4W 5% 1K	1	1065-1001
R72	Res Var PC MT 50 1T	1	1072-0050
S1	Switch, Slide DPDT	1	1840-2200
S2	Switch, 7 Station, DPDT, Intercon	1	1850-0070

www.SteamPoweredRadio.Com

CKT REF	DESCRIPTION	QTY	TFT STOCK NO.
	Button Switch, Black	1	1850-0009
U1	I/C LF 356	1	1100-0356
U2	I/C LF 356	1	1100-0356
U3	I/C LF 356	1	1100-0356
U4	I/C LF 356	1	1100-0356
U5	I/C LF 356	1	1100-0356
U6	I/C LF 356	1	1100-0356
U7	I/C LF 356	1	1100-0356
U8	I/C CA 3140 OP AMP	1	1100-3140
U9	I/C CA 3140 OP AMP	1	1100-3140
U10	I/C CA 3140 OP AMP	1	1100-3140
U11	I/C CA 3140 OP AMP	1	1100-3140
U12	I/C CA 3140 OP AMP	1	1100-3140
	Socket I/C 8 Pin	12	2250-1008
A1	P.C. Bd	1	1600-2070
ASCH	Schematic		6601-2800
	Test procedure		5104-0097
	Loading diagram		6608-2070

www.SteamPoweredRadio.Com

NEXT ASSY	USED ON
6608-2040	1700

REVISIONS

SYM	DESCRIPTION	DR	CHK	AUTH	DATE
B	REL. TO PRODUCTION			461	
C	Revised per ECO 640	AC			5/25/77
D	REVISED PER ECO 832	KK			
E	REVISED PER ECO 930	KK			

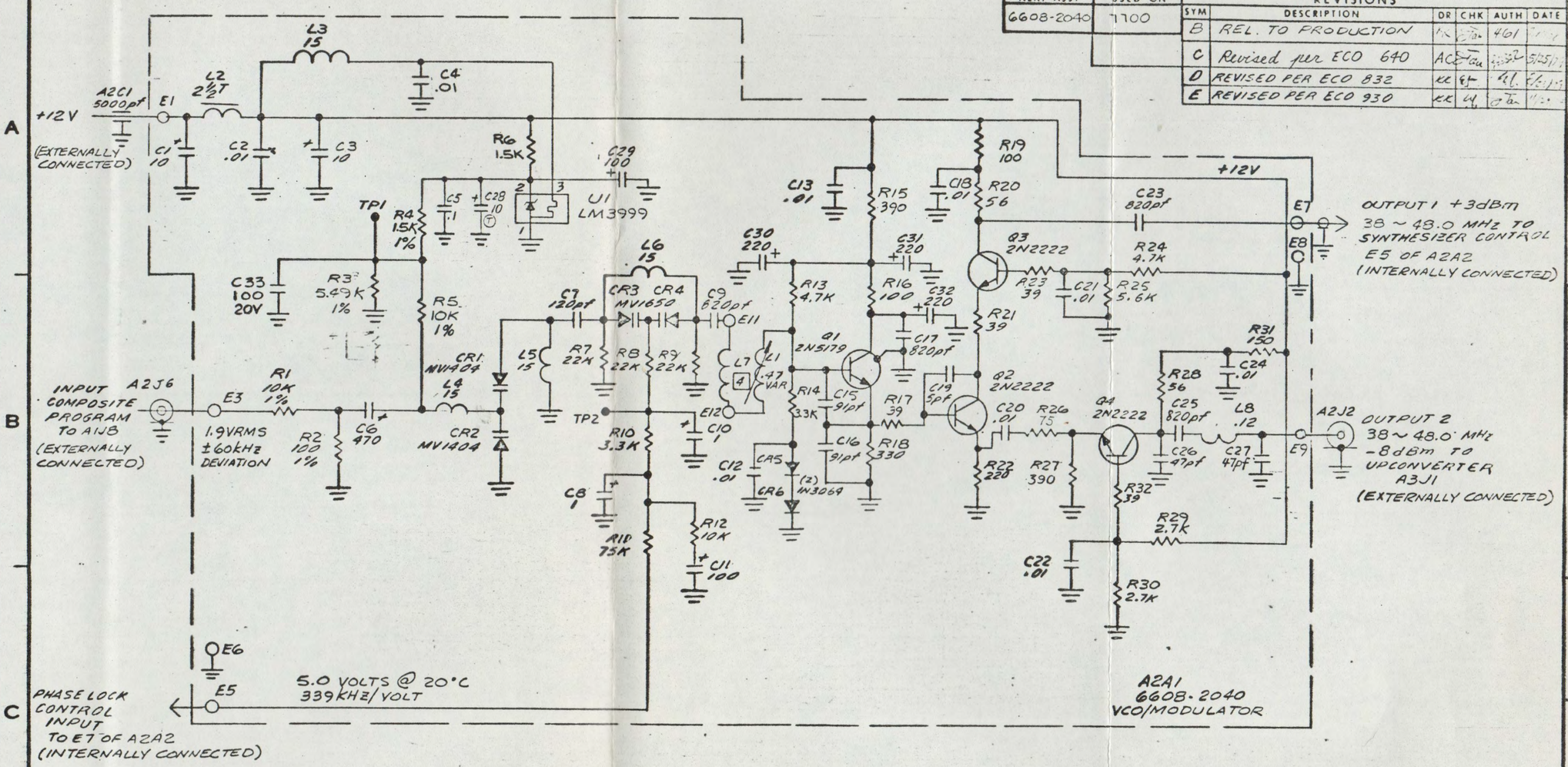

NOTES, UNLESS OTHERWISE SPECIFIED;

1. RESISTOR VALUES ARE IN OHMS ±5%, ¼ WATT.
2. CAPACITOR VALUES ARE IN MICROFARADS.
3. INDUCTOR VALUES ARE IN MICROHENRIES, ±10%
4. SEE TABLE BELOW FOR VALUES

SELECT VALUES

f. OUT	VCO OUT	L7
940-946MHz	38-41.0MHz	.82μHY
944-952MHz	40-44.0MHz	.68μHY
949-957MHz	42.5-46.5MHz	.47μHY
955-960MHz	45.5-48.0MHz	.27μHY

REFERENCE DESIGNATORS	
LAST USED	NOT USED
C32	C14
CR6	
L8	
R32	
Q4	
E12	E2, E4, E10
TP2	
U1	

QTY PER ASSY	ITEM NO.	EN NO	PART NO.	DESCRIPTION	REF DES
LIST OF MATERIALS					

REMOVE ALL BURRS AND SHARP EDGES

TOLERANCES UNLESS OTHERWISE SPECIFIED
.XX ± ——— ANGULAR
.XXX ± ——— ±———

DO NOT SCALE THIS PRINT

		DATE
DRAWN BY		
CHK BY		7/7/78
PROJ ENG		7/7/78
MFG ENG		8/5/78
APPD		
APPD		
ECO NO		

TFT TIME & FREQUENCY TECHNOLOGY INC
3000 Olcott St., Santa Clara, California 95051
(408) 246-6365

TITLE FIG 6-4 VCO/MODULATOR A2A1

SIZE C | DRAWING NO A2A1-2540 | REV E

SCALE | SHT OF

DWG. NO 6601-2540

If You Didn't Get This From My Site,
Then It Was Stolen From...
www.SteamPoweredRadio.Com

BISHOP GRAPHICS/ACCUPRESS REORDER NO. A-8835

NEXT ASSY	USED ON
5102-2900	7700

REVISIONS

SYM	DESCRIPTION	DR	CHK	AUTH	DATE
A	REL TO PRODUCTION	KK			7/15/72
B	Revised per ECO 641	AC			5/23/73
C	Revised per ECO 805	AC			1/31/74
D	REVISED PER ECO 831	KK			5/22/74
E	REVISED PER ECO 929	KK			11/30/79

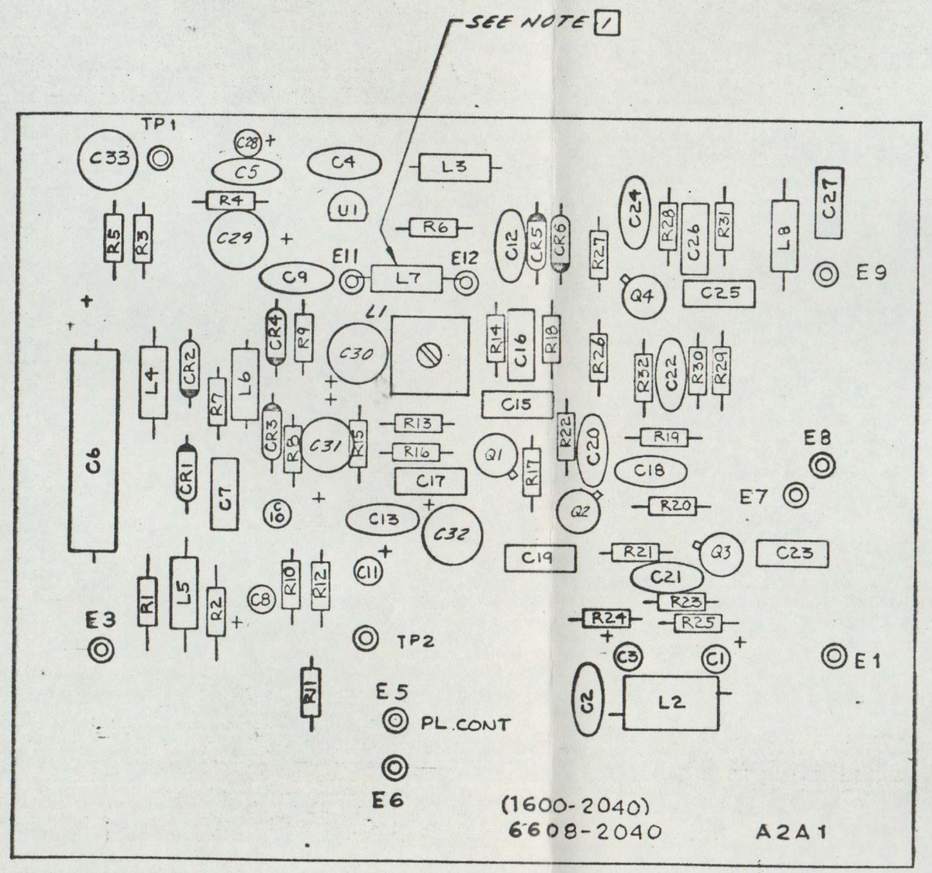

REF: SCHEMATIC 6601-2540

1 L7 INSTALLED AT TEST

NOTE: UNLESS OTHERWISE SPECIFIED

ITEM NO.	EN NO.	PART NO.	DESCRIPTION	REF DES
QTY PER ASSY			LIST OF MATERIALS	

REMOVE ALL BURRS AND SHARP EDGES

TOLERANCES UNLESS OTHERWISE SPECIFIED
.XX ± ~ ANGULAR ± ~
.XXX ± ~

DO NOT SCALE THIS PRINT

		DATE
DRAWN BY	A. DOXIE	7-12-72
CHK BY	KK	7/13/73
PROJ ENG		7/21/73
MFG ENG		5/1/74
APPD		
APPD		
ECO NO		

TFT TIME & FREQUENCY TECHNOLOGY INC
3000 Olcott St., Santa Clara, California 95051
(408) 246-6365

TITLE P.C. BOARD ASSY. A2A1 VCO/MOD.

SIZE C DRAWING NO 6608-2040 REV E

SCALE 2:1 SHT 1 OF 1

DWG. NO. 6608-2040

www.SteamPoweredRadio.Com

BISHOP GRAPHICS/ACCUPRESS REORDER NO. A-8835

Model 7700. A2A1 VCO/MOD Assembly # 6608-2040
Rev E

CKT REF	DESCRIPTION	QTY	TFT STOCK NO.
C1	Cap Tan 10MFD 20V 10%	1	1008-0100
C2	Cap Cer Disc .01UF	1	1005-1039
C3	Cap Tan 10MFD 20V 10%	1	1008-0100
C4	Cap Cer Disc .01UF	1	1005-1039
C5	Cap Cer Disc .1 MFD 12V	1	1005-0100
C6	Cap Elect 470 MFD	1	1010-0471
C7	Cap Mica 120 PF	1	1001-0121
C8	Cap Tan 1MFD 35V	1	1008-0011
C9	Cap Cer Disc 820 PF	1	1005-0821
C10	Cap Tan 1 MED 35V	1	1008-0011
C11	Cap Tan 100 MFD 20V 20%	1	1008-0102
C12	Cap Cer Disc .01UF	1	1005-1039
C13	Cap Cer Disc .01UF	1	1005-1039
C14	Not Used		
C15	Cap Mica 91 PF	1	1001-0910
C16	Cap Mica 91 PF	1	1001-0910
C17	Cap Cer Disc 820 PF	1	1005-0821
C18	Cap Cer Disc .01UF	1	1005-1039
C19	Cap Mica 5.0 PF	1	1001-0050
C20	Cap Cer Disc .01UF	1	1005-1039
C21	Cap Cer Disc .01UF	1	1005-1039
C22	Cap Cer Disc .01UF	1	1005-1039
C23	Cap Cer Disc 820PF	1	1005-0821
C24	Cap Cer Disc .01UF	1	1005-1039
C25	Cap Cer Disc 820 PF	1	1005-0821
C26	Cap Mica 47 PF	1	1001-0470
C27	Cap Mica 47 PF	1	1001-0470
C28	Cap Tan 10 MFD 20V 10%	1	1008-0100
C29	Cap Tan 100 MFD 20V 20%	1	1008-0102
C30	Cap Tan 220 MFD 10V	1	1008-2200
C31	Cap Tan 220 MFD 10V	1	1008-2200
C32	Cap Tan 220 MFD 10V	1	1008-2200
CR1	Diode Vari Cap MV1404 771	1	1290-1404
CR2	Diode Vari Cap MV1404 771	1	1290-1404
CR3	Diode Vari Cap MV1650 761	1	1290-1650
CR4	Diode Vari Cap MV1650 761	1	1290-1650
CR5	DIO 1N3064	1	1281-3064
CR6	DIO 1N3064	1	1281-3064
L1	IND VAR .47 UH	1	1550-0011
L2	Choke RF 2 1/2 T	1	1530-0025
L3	Choke RF 15UH	1	1530-0150
L4	Choke RF 15UH	1	1530-0150
L5	Choke RF 15UH	1	1530-0150

www.SteamPoweredRadio.Com

Model 7700 A2A1 VCO/MOD Assembly #6608-2040
Rev E

CKT REF	DESCRIPTION	QTY	TFT STOCK NO.
L6	Choke RF 15UH	1	1530-0150
L7	Select Values (See Schematic)		
L8	Choke .12UH	1	1531-0012
Q1	Trans 2N5179	1	1271-5179
Q2	Trans 2N2222	1	1271-2222
Q3	Trans 2N2222	1	1271-2222
Q4	Trans 2N2222	1	1271-2222
R1	Res Mt Flm 1/8W 1% 10K	1	1061-1002
R2	Res Mt Flm 1/8W 1% 100	1	1061-0100
R3	Res Mt Flm 1/8W 1% 5.49K	1	1061-5491
R4	Res Mt Flm 1/8W 1% 1.5K	1	1061-1501
R5	Res Mt Flm 1/8W 1% 10K	1	1061-1002
R6	Res Car Comp 1/4W 5% 1.5K	1	1065-1501
R7	Res Car Comp 1/4W 5% 22K	1	1065-2202
R8	Res Car Comp 1/4W 5% 22K	1	1065-2202
R9	Res Car Comp 1/4W 5% 22K	1	1065-2202
R10	Res Car Comp 1/4W 5% 3.3K	1	1065-3301
R11	Res Car Comp 1/4W 5% 75K	1	1065-7502
R12	Res Car Comp 1/4W 5% 10K	1	1065-1002
R13	Res Car Comp 1/4W 5% 4.7K	1	1065-4701
R14	Res Car Comp 1/4W 5% 3.3K	1	1065-3301
R15	Res Car Comp 1/4W 5% 390	1	1065-0390
R16	Res Car Comp 1/4W 5% 100	1	1065-0100
R17	Res Car Comp 1/4W 5% 39	1	1065-0039
R18	Res Car Comp 1/4W 5% 330	1	1065-0330
R19	Res Car Comp 1/4W 5% 100	1	1065-0100
R20	Res Car Comp 1/4W 5% 56	1	1065-0056
R21	Res Car Comp 1/4W 5% 39	1	1065-0039
R22	Res Car Comp 1/4W 5% 220	1	1065-0220
R23	Res Car Comp 1/4W 5% 39	1	1065-0039
R24	Res Car Comp 1/4W 5% 4.7K	1	1065-4701
R25	Res Car Comp 1/4W 5% 5.6K	1	1065-5601
R26	Res Car Comp 1/4W 5% 75	1	1065-0075
R27	Res Car Comp 1/4W 5% 390	1	1065-0390
R28	Res Car Comp 1/4W 5% 56	1	1065-0056
R29	Res Car Comp 1/4W 5% 2.7K	1	1065-2701
R30	Res Car Comp 1/4W 5% 2.7K	1	1065-2701
R31	Res Car Comp 1/4W 5% 150	1	1065-0150
R32	Res Car Comp 1/4W 5% 39	1	1065-0039
U1	I/C LM3999 771	1	1100-3999
	PC BD 7700 A2A1	1	1600-2040

www.SteamPoweredRadio.Com

NEXT ASSY	USED ON
6608-2051	7700

REVISIONS

SYM	DESCRIPTION	DR	CHK	AUTH	DATE
A		KK		461	
B	REV PER ECO 681	AC			4-11-79
C	REVISED PER ECO 835A	KK			5/4/79

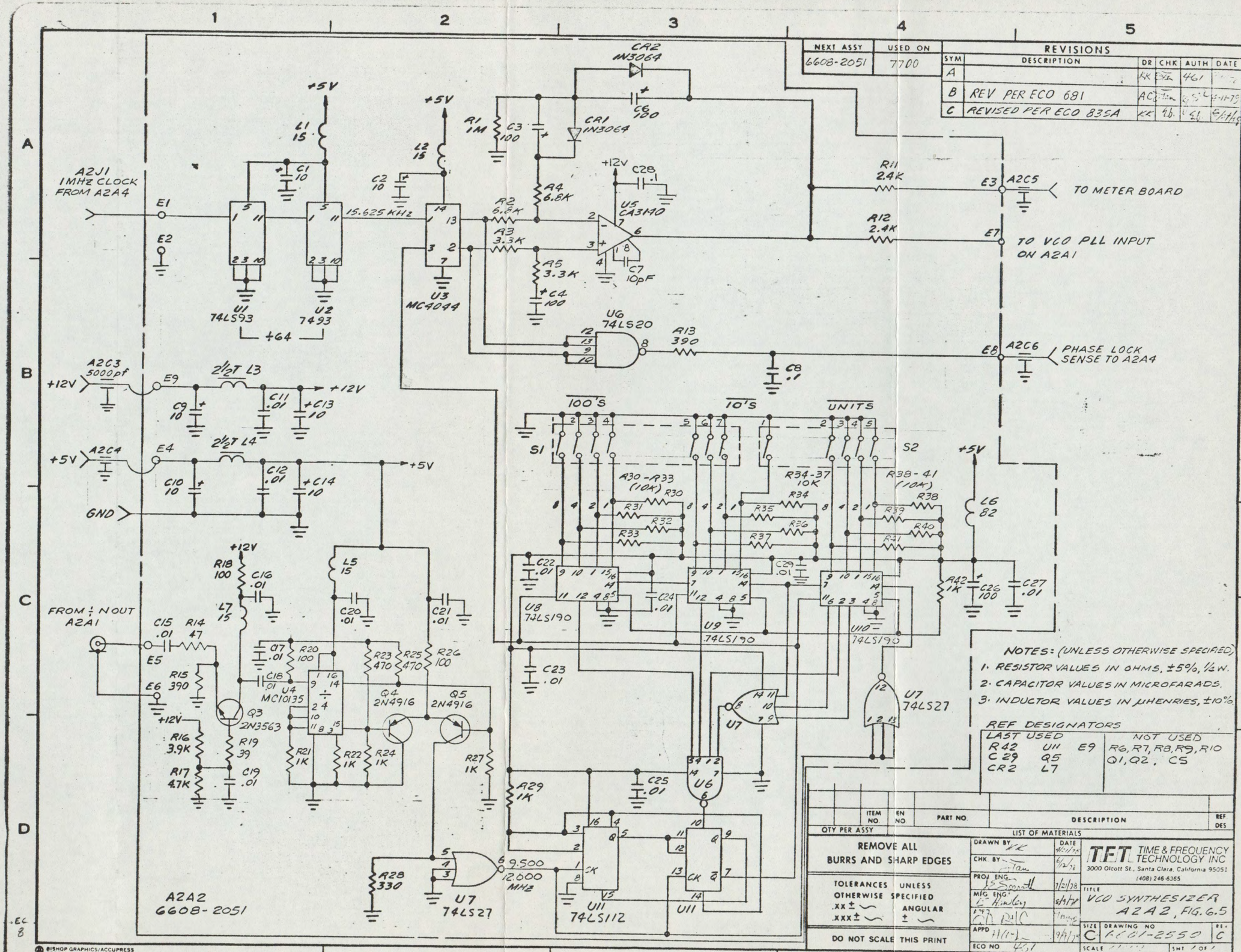

NOTES: (UNLESS OTHERWISE SPECIFIED)
1. RESISTOR VALUES IN OHMS, ±5%, ½W.
2. CAPACITOR VALUES IN MICROFARADS.
3. INDUCTOR VALUES IN μHENRIES, ±10%.

REF DESIGNATORS

LAST USED			NOT USED
R42	U11	E9	R6, R7, R8, R9, R10
C29	Q5		Q1, Q2, C5
CR2	L7		

QTY PER ASSY	ITEM NO	EN NO	PART NO	DESCRIPTION	REF DES

LIST OF MATERIALS

REMOVE ALL BURRS AND SHARP EDGES

TOLERANCES UNLESS OTHERWISE SPECIFIED
.XX ± ~
.XXX ± ~
ANGULAR ± ~

DO NOT SCALE THIS PRINT

		DATE
DRAWN BY	KK	4/11/79
CHK BY		6/12/79
PROJ ENG		7/21/78
MFG ENG		8/4/79
APPD		9/4/79
ECO NO	835	

TFT TIME & FREQUENCY TECHNOLOGY INC
3000 Olcott St., Santa Clara, California 95051
(408) 246-6365

TITLE: VCO SYNTHESIZER A2A2, FIG. 6.5

SIZE C | DRAWING NO A601-2550 | REV C

SCALE | SHT 1 OF 1

DWG. NO. A601-2550

EC 8

BISHOP GRAPHICS/ACCUPRESS REORDER NO. A-8835

If You Didn't Get This From My Site,
Then It Was Stolen From...
www.SteamPoweredRadio.Com

NEXT ASSY	USED ON
5102-2900	7700

REVISIONS

SYM	DESCRIPTION	DR	CHK	AUTH	DATE
A	REL. FOR PRODUCTION	LH	JT	461	7/17/78
B	REV PER ECO	MY	[illegible]	683	5-7-9
C	REVISED PER ECO 836	KK	[illegible]	[illegible]	8/24/79

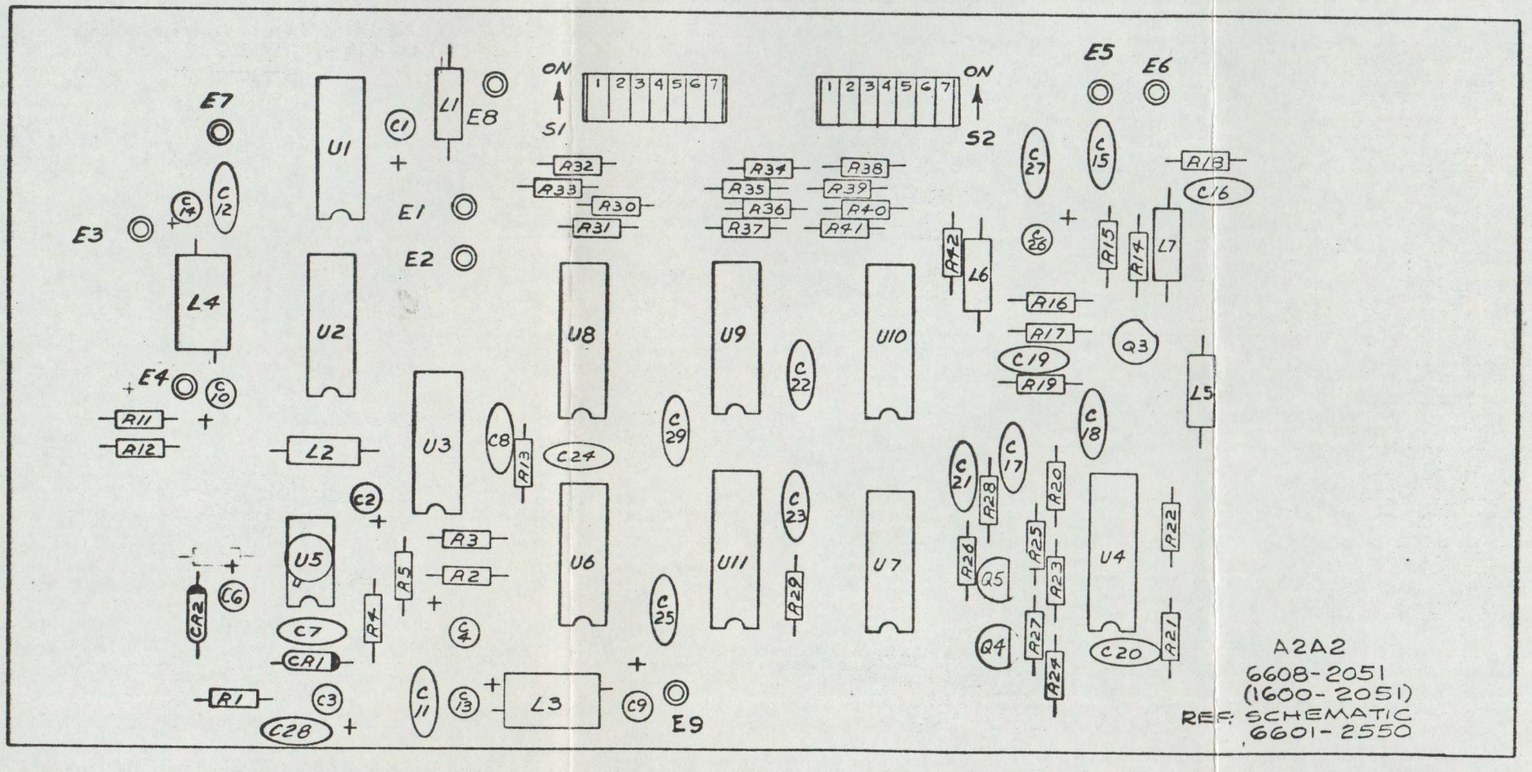

DWG. NO. 6608-2051

QTY PER ASSY	ITEM NO.	EN NO.	PART NO.	DESCRIPTION	REF DES

LIST OF MATERIALS

REMOVE ALL BURRS AND SHARP EDGES

TOLERANCES UNLESS OTHERWISE SPECIFIED
.XX ± ~ ANGULAR
.XXX ± ~ ± ~

DO NOT SCALE THIS PRINT

		DATE
DRAWN BY	D HARTE	7/4/78
CHK. BY	[illegible]	7/17/78
PROJ ENG.	[illegible]	7/21/78
MFG ENG	[illegible]	8/5/78
APPD	[illegible]	[illegible]
APPD	[illegible]	7/19/78
ECO NO.		

TFT TIME & FREQUENCY TECHNOLOGY INC
3000 Olcott St., Santa Clara, California 95051
(408) 246-6365

TITLE PC BD ASSY A2A2 MOD 7700

SIZE C | DRAWING NO 6608-2051 | REV C

SCALE 2:1 | SHT 1 OF 1

www.SteamPoweredRadio.Com

BISHOP GRAPHICS/ACCUPRESS REORDER NO. A-8835

Model 7700 VCO SYNTH A2A2 Assembly #6608-2051
Rev C

CKT REF	DESCRIPTION	QTY	TFT STOCK NO.
C1	Cap Tan 10 MFD 20V 10%	1	1008-0100
C2	Cap Tan 10 MFD 20V 10%	1	1008-0100
C3	Cap Tan 100 MFD 20V 20%	1	1008-0102
C4	Cap Tan 100 MFD 20V 20%	1	1008-0102
C5	Not Used		
C6	Cap Tan 100 MFD 20V 20%	1	1008-0102
C7	Cap Mica 10 PF	1	1001-0100
C8	Cap Cer Disc .1MFD 12V	1	1005-0100
C9	Cap Tan 10 MFD 20V 10%	1	1008-0100
C10	Cap Tan 10 MFD 20V 10%	1	1008-0100
C11	Cap Cer Disc .01 UF	1	1005-1039
C12	Cap Cer Disc .01 UF	1	1005-1039
C13	Cap Tan 10 MFD 20V 10%	1	1008-0100
C14	Cap Tan 10 MFD 20V 10%	1	1008-0100
C15	Cap Cer Disc .01 UF	1	1005-1039
C16	Cap Cer Disc .01 UF	1	1005-1039
C17	Cap Cer Disc .01 UF	1	1005-1039
C18	Cap Cer Disc .01 UF	1	1005-1039
C19	Cap Cer Disc .01 UF	1	1005-1039
C20	Cap Cer Disc .01 UF	1	1005-1039
C21	Cap Cer Disc .01 UF	1	1005-1039
C22	Cap Cer Disc .01 UF	1	1005-1039
C23	Cap Cer Disc .01 UF	1	1005-1039
C24	Cap Cer Disc .01 UF	1	1005-1039
C25	Cap Cer Disc .01 UF	1	1005-1039
C26	Cap Tan 100 MFD 20V 20%	1	1008-0102
C27	Cap Cer Disc .01 UF	1	1005-1039
C28	Cap Cer Disc .1 MFD 12V	1	1005-0100
C29	Cap Cer Disc .01 UF	1	1005-1039
CR1	DIO 1N3064	1	1281-3064
CR2	DIO 1N3064	1	1281-3064
L1	Choke RF 15UH	1	1530-0150
L2	Choke RF 15UH	1	1530-0150
L3	Choke RF 2 1/2 T	1	1530-0025
L4	Choke RF 2 1/2 T	1	1530-0025
L5	Choke RF 15 UH	1	1530-0150
L6	Choke RF 82 UF	1	1530-0820
L7	Choke RF 15UH	1	1530-0150
Q1	Not Used		
Q2	Not Used		
Q3	Trans 2N3563	1	1271-3563
Q4	Trans 2N4916	1	1271-4916

www.SteamPoweredRadio.Com

CKT REF	DESCRIPTION	QTY	TFT STOCK NO.
Q5	Trans 2N4916	1	1271-4916
R1	Res Car Comp 1/4W 5% 1M	1	1065-1004
R2	Res Car Comp 1/4W 5% 6.8K	1	1065-6801
R3	Res Car Comp 1/4W 5% 3.3K	1	1065-3301
R4	Res Car Comp 1/4W 5% 6.8K	1	1065-6801
R5	Res Car Comp 1/4W 5% 3.3K	1	1065-3301
R6	Not Used		
R7	Not Used		
R8	Not Used		
R9	Not Used		
R10	Not Used		
R11	Res Car Comp 1/4W 5% 2.4K	1	1065-2401
R12	Res Car Comp 1/4W 5% 2.4K	1	1065-2401
R13	Res Car Comp 1/4W 5% 390	1	1065-0390
R14	Res Car Comp 1/4W 5% 47	1	1065-0047
R15	Res Car Comp 1/4W 5% 390	1	1065-0390
R16	Res Car Comp 1/4W 5% 3.9K	1	1065-3901
R17	Res Car Comp 1/4W 5% 4.7K	1	1065-4701
R18	Res Car Comp 1/4W 5% 100	1	1065-0100
R19	Res Car Comp 1/4W 5% 39	1	1065-0039
R20	Res Car Comp 1/4W 5% 100	1	1065-0100
R21	Res Car Comp 1/4W 5% 1K	1	1065-1001
R22	Res Car Comp 1/4W 5% 1K	1	1065-1001
R23	Res Car Comp 1/4W 5% 470	1	1065-0470
R24	Res Car Comp 1/4W 5% 1K	1	1065-1001
R25	Res Car Comp 1/4W 5% 470	1	1065-0470
R26	Res Car Comp 1/4W 5% 100	1	1065-0100
R27	Res Car Comp 1/4W 5% 1K	1	1065-1001
R28	Res Car Comp 1/4W 5% 330	1	1065-0330
R29	Res Car Comp 1/4W 5% 1K	1	1065-1001
R30	Res Car Comp 1/4W 5% 10K	1	1065-1002
R31	Res Car Comp 1/4W 5% 10K	1	1065-1002
R32	Res Car Comp 1/4W 5% 10K	1	1065-1002
R33	Res Car Comp 1/4W 5% 10K	1	1065-1002
R34	Res Car Comp 1/4W 5% 10K	1	1065-1002
R35	Res Car Comp 1/4W 5% 10K	1	1065-1002
R36	Res Car Comp 1/4W 5% 10K	1	1065-1002
R37	Res Car Comp 1/4W 5% 10K	1	1065-1002
R38	Res Car Comp 1/4W 5% 10K	1	1065-1002
R39	Res Car Comp 1/4W 5% 10K	1	1065-1002
R40	Res Car Comp 1/4W 5% 10K	1	1065-1002
R41	Res Car Comp 1/4W 5% 10K	1	1065-1002
R42	Res Car Comp 1/4W 5% 1K	1	1065-1001

www.SteamPoweredRadio.Com

Model 7700 VCD SYNTH A2A2 Assembly #6608-2051
Rev C

CKT REF	DESCRIPTION	QTY	TFT STOCK NO.
S1	Switch, 14 Pin Dip	1	1800-2067
S2	Switch, 14 Pin Dip	1	1800-2067
U1	I/C 74LS93	1	1101-7493
U2	I/C SN7493N	1	1100-7493
U3	I/C MC4044	1	1100-4044
U4	I/C MC10135	1	1100-1135
U5	I/C CA3140 OP AMP	1	1100-3140
U6	I/C 74LS20N	1	1101-7420
U7	I/C 74LS27	1	1101-7427
U8	I/C 74LS190	1	1101-0190
U9	I/C 74LS190	1	1101-0190
U10	I/C 74LS190	1	1101-0190
U11	I/C 74LS112	1	1101-0112
	Socket I/C 8 Pin	1	2250-1008
	Socket I/C 14 Pin	1	2250-1014
	Socket I/C 16 Pin	1	2250-1016
	P.C. BD	1	1600-2051
ASCH	Schematic		6601-2550
	Test Procedure		5104-0099
	Loading Diagram		6608-2051

www.SteamPoweredRadio.Com

NEXT ASSY	USED ON
6608-2030	7700

REVISIONS

SYM	DESCRIPTION	DR	CHK	AUTH	DATE
A	RELEASED FOR PRODUCTION	KK		461	
B	REV PER ECO	MY		678	5-3-A
C	REVISED PER ECO 839	KK			

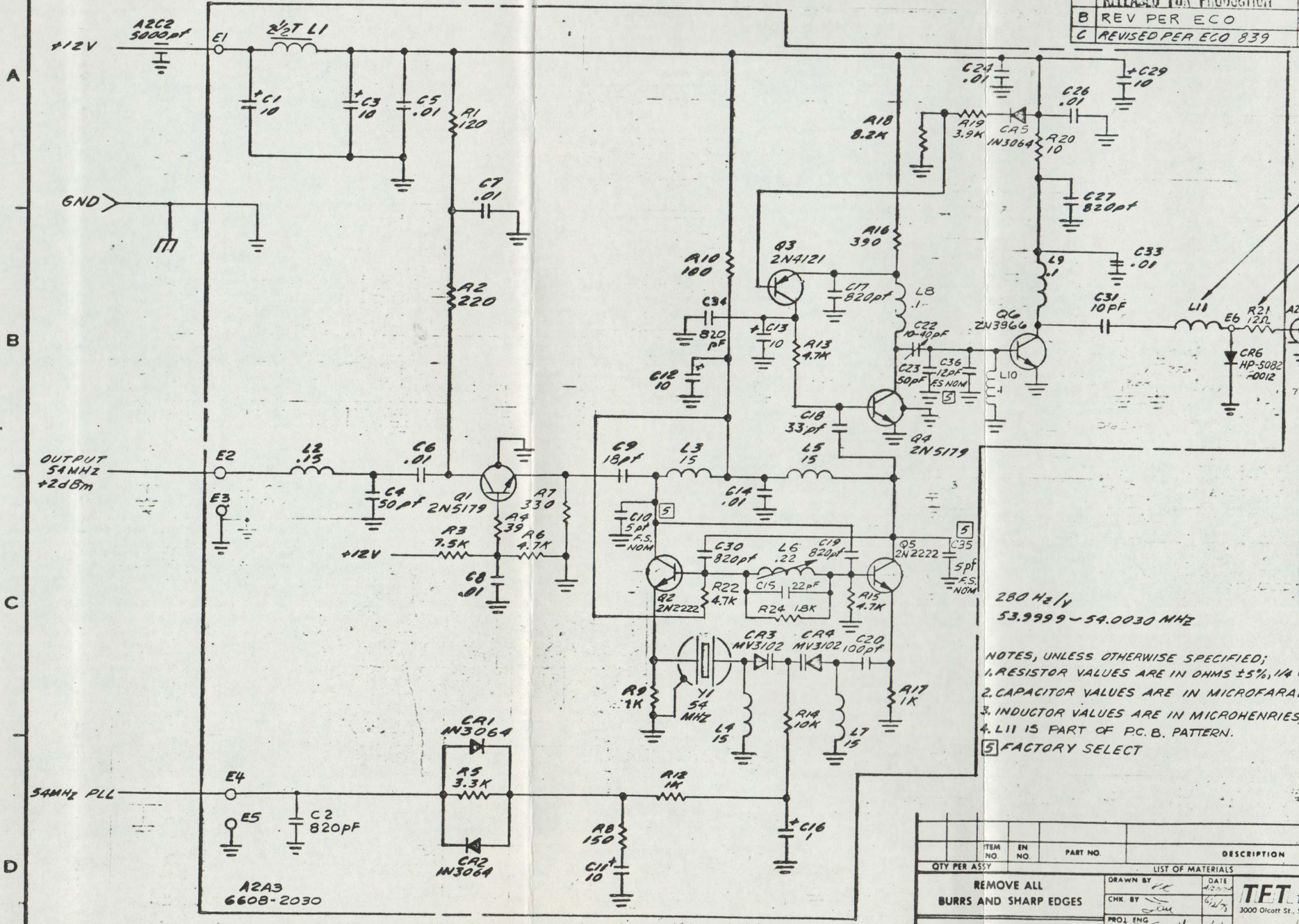

REFERENCE DESIGNATORS

LAST USED	NOT USED
CR6	C21
C36	C25
R24	C32
L11	R11
Q6	R23
E6	
Y1	

280 Hz/V
53.9999 ~ 54.0030 MHZ

NOTES, UNLESS OTHERWISE SPECIFIED;
1. RESISTOR VALUES ARE IN OHMS ±5%, 1/4 WATT.
2. CAPACITOR VALUES ARE IN MICROFARADS.
3. INDUCTOR VALUES ARE IN MICROHENRIES, ±10%.
4. L11 IS PART OF P.C.B. PATTERN.
5 FACTORY SELECT

QTY PER ASSY	ITEM NO.	EN NO.	PART NO.	DESCRIPTION	REF DES

LIST OF MATERIALS

REMOVE ALL BURRS AND SHARP EDGES

TOLERANCES UNLESS OTHERWISE SPECIFIED
.XX ± ~ ANGULAR
.XXX ± ~ ± ~

DO NOT SCALE THIS PRINT

		DATE
DRAWN BY	KK	4-20-78
CHK BY		6/2/78
PROJ ENG		7/21/78
MFG ENG		8/8/78
APPD		8/8/78
APPD		11/4/79
ECO NO		

TFT TIME & FREQUENCY TECHNOLOGY INC
3000 Olcott St., Santa Clara, California 95051
(408) 246-6365

TITLE VCXO/MULTIPLIER A2A3, FIG 6.6

SIZE	DRAWING NO	REV
C	6601-2530	C

SCALE NONE SHT 1 OF 1

If You Didn't Get This From My Site,
Then It Was Stolen From...
www.SteamPoweredRadio.Com

BISHOP GRAPHICS/ACCUPRESS
REORDER NO. A-8835

NEXT ASSY	USED ON
5102-2900	
	7700

REVISIONS

SYM	DESCRIPTION	DR	CHK	AUTH	DATE
A	RELEASED FOR PRODUCTION	LH	[illegible]	461	[illegible]
B	Revised per ECO 693	AC	[illegible]	[illegible]	5/24/77
C	Revised per ECO 806	AC	[illegible]	[illegible]	[illegible]
D	REVISED PER ECO 841	KK	[illegible]	[illegible]	[illegible]

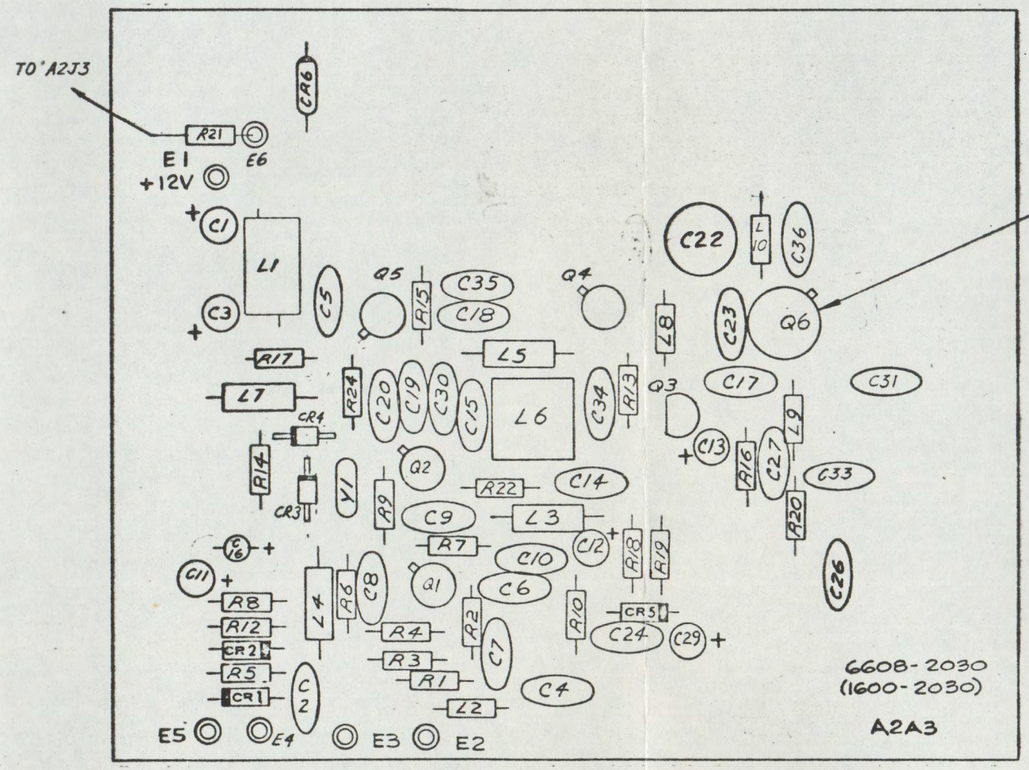

INSTALL TRANSISTOR PAD

2. FOR SCHEMATIC SEE 6601-2530
1. FOR MATERIAL LIST SEE 6608-2030
NOTES: UNLESS OTHERWISE SPECIFIED

ITEM NO.	EN NO.	PART NO.	DESCRIPTION	REF DES
QTY PER ASSY		LIST OF MATERIALS		

REMOVE ALL BURRS AND SHARP EDGES

TOLERANCES UNLESS OTHERWISE SPECIFIED
.XX ± ~ ANGULAR ±
.XXX ± ~

DO NOT SCALE THIS PRINT

		DATE
DRAWN BY	D. HARTE	7-6-78
CHK BY	[illegible]	7/21/78
PROJ ENG	[illegible]	7/21/78
MFG ENG	[illegible]	8/8/78
APPD	[illegible]	[illegible]
APPD	[illegible]	[illegible]
ECO NO		

TFT TIME & FREQUENCY TECHNOLOGY INC
3000 Olcott St., Santa Clara, California 95051
(408) 246-6365

TITLE PCBD ASSY A2A3 MOD 7700

SIZE C | DRAWING NO 6608-2030 | REV D

SCALE 2:1 | SHT 1 OF 1

DWG. NO. 6608-2030

www.SteamPoweredRadio.Com

BISHOP GRAPHICS/ACCUPRESS
REORDER NO. A-6835

Model 7700 A2A3 VCXO/Mult Assembly #6608-2030
Rev D

CKT REF	DESCRIPTION	QTY	TFT STOCK NO.
C1	Cap Tan 10 MFD 20V 10%	1	1008-0100
C2	Cap Cer Disc 820 PF	1	1005-0821
C3	Cap Tan 10 MFD 20V 10%	1	1008-0100
C4	Cap Cer Disc 50 PF	1	1005-0500
C5	Cap Cer Disc .01	1	1005-1039
C6	Cap Cer Disc .01	1	1005-1039
C7	Cap Cer Disc .01	1	1005-1039
C8	Cap Cer Disc .01	1	1005-1039
C9	Cap Cer Disc 18 PF 5%	1	1005-0180
C10	Cap Cer Disc 5 PF	1	1005-0051
C11	Cap Tan 10 MFD 20V 10%	1	1008-0100
C12	Cap Tan 10 MFD 20V 10%	1	1008-0100
C13	Cap Tan 10 MFD 20V 10%	1	1008-0100
C14	Cap Cer Disc .01	1	1005-1039
C15	Cap Cer Disc 22 PF 5%	1	1005-0220
C16	Cap Tan 1 MFD 35V	1	1008-0011
C17	Cap Cer Disc 820 PF	1	1005-0821
C18	Cap Cer Disc 33 PF	1	1005-0330
C19	Cap Cer Disc 820 PF	1	1005-0821
C20	Cap Cer Disc 100 PF	1	1005-0101
C22	Cap Var 10-40 PF	1	1012-1040
C23	Cap Cer Disc 50 PF	1	1005-0500
C24	Cap Cer Disc .01	1	1005-1039
C26	Cap Cer Disc .01	1	1005-1039
C27	Cap Cer Disc 820 PF	1	1005-0821
C29	Cap Tan 10 MFD 20V 10%	1	1008-0100
C30	Cap Cer Disc 820 PF	1	1005-0821
C31	Cap Cer Disc 10 PF	1	1005-0010
C33	Cap Cer Disc .01	1	1005-1039
C34	Cap Cer Disc 820 PF	1	1005-0821
C35	Cap Cer Disc 5 PF	1	1005-0051
C36	Cap Cer Disc 12 PF	1	1005-0120
CR1	DIO IN3064	1	1281-3064
CR2	DIO IN3064	1	1281-3064
CR3	Vari Cap MV3102	1	1290-3102
CR4	Vari Cap MV3102	1	1290-3102
CR5	DIO IN3064	1	1281-3064
CR6	DIO HP5082-0012	1	1282-0136
L1	Choke RF 2 1/2 T	1	1530-0025
L2	Choke .15 UF	1	1531-0015
L3	Choke RF 15 UH	1	1530-0150
L4	Choke RF 15 UH	1	1530-0150

www.SteamPoweredRadio.Com

Model 7700 A2A3 VCXO/Mult Assembly #6608-2030
Rev D

CKT REF	DESCRIPTION	QTY	TFT STOCK NO.
L5	Choke RF 15 UH	1	1530-0150
L6	Ind Var 4T .22	1	1550-0010
L7	Choke RF 15 UH	1	1530-0150
L8	Choke .1 UH 771	1	1531-0010
L9	Choke .1 UH 771	1	1531-0010
L10	Choke .1 UH 771	1	1531-0010
Q1	Trans 2N5179	1	1271-5179
Q2	Trans 2N2222	1	1271-2222
Q3	Trans 2N4121	1	1271-4121
Q4	Trans 2N5179	1	1271-5179
Q5	Trans 2N2222	1	1271-2222
Q6	Trans 2N3866	1	1271-3866
	Trans Pad	1	1150-0003
R1	Res Car Comp 1/4W 5% 120	1	1065-0120
R2	Res Car Comp 1/4W 5% 220	1	1065-0220
R3	Res Car Comp 1/4W 5% 7.5K	1	1065-7501
R4	Res Car Comp 1/4W 5% 39	1	1065-0039
R5	Res Car Comp 1/4W 5% 3.3K	1	1065-3301
R6	Res Car Comp 1/4W 5% 4.7K	1	1065-4701
R7	Res Car Comp 1/4W 5% 330	1	1065-0330
R8	Res Car Comp 1/4W 5% 150	1	1065-0150
R9	Res Car Comp 1/4W 5% 1K	1	1065-1001
R10	Res Car Comp 1/4W 5% 100	1	1065-0100
R12	Res Car Comp 1/4W 5% 1K	1	1065-1001
R13	Res Car Comp 1/4W 5% 4.7K	1	1065-4701
R14	Res Car Comp 1/4W 5% 10K	1	1065-1002
R15	Res Car Comp 1/4W 5% 4.7K	1	1065-4701
R16	Res Car Comp 1/4W 5% 390	1	1065-0390
R17	Res Car Comp 1/4W 5% 1K	1	1065-1001
R18	Res Car Comp 1/4W 5% 8.2K	1	1065-8201
R19	Res Car Comp 1/4W 5% 3.9K	1	1065-3901
R20	Res Car Comp 1/4W 5% 10	1	1065-0010
R21	Res Car Comp 1/4W 5% 12	1	1065-0012
R22	Res Car Comp 1/4W 5% 4.7K	1	1065-4701
R24	Res Car Comp 1/4W 5% 1.8K	1	1065-1801
Y1	Crystal 54.000MHz STL	1	2400-5401
	P.C. BD 7700 A2A3	1	1600-2030
	Draw/Sch		6601-2530

www.SteamPoweredRadio.Com

NEXT ASSY	USED ON
6608-2050	7700

REVISIONS

SYM	DESCRIPTION	DR	CHK	AUTH	DATE
A	[illegible]	[illegible]	[illegible]	[illegible]	
B	REV PER ECO	AC	[illegible]	[illegible]	[illegible]
C	REVISED PER ECO 848	KK	[illegible]	[illegible]	[illegible]

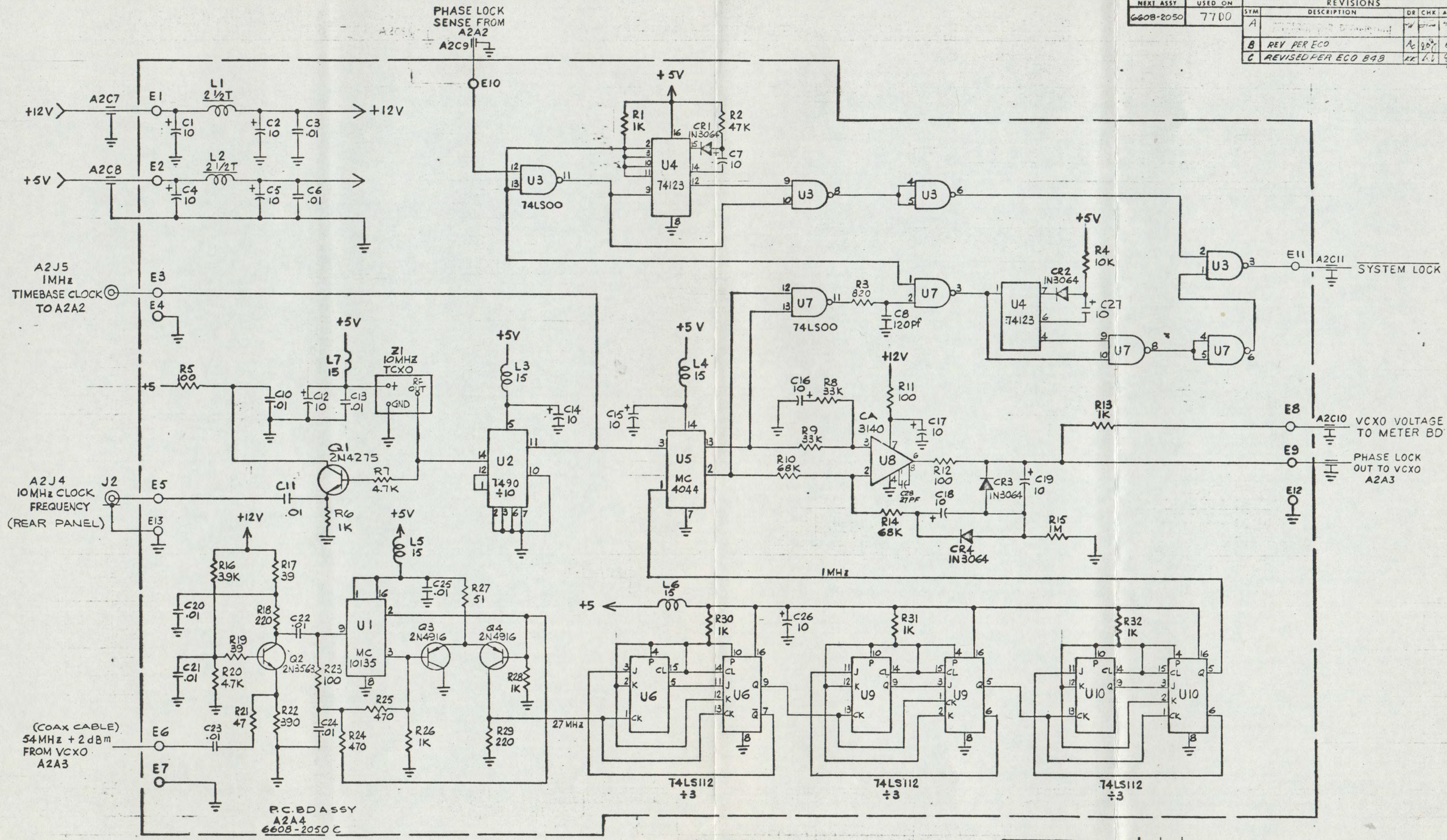

NOTES:-(UNLESS OTHERWISE SPECIFIED)

1. RESISTOR VALUES ARE IN OHMS ±5% 1/4 WATT.
2. CAPACITOR VALUES ARE IN MICROFARADS.
3. INDUCTOR VALUES ARE IN MICROHENRIES, ±10%.

REF DESIGNATION	
LAST USED	NOT USED
C28	C9
R32	
L7	
Q4	
U10	
CR4	
E13	

QTY PER ASSY	ITEM NO	BM NO.	PART NO.	DESCRIPTION	REF DES.

LIST OF MATERIALS

REMOVE ALL BURRS AND SHARP EDGES

TOLERANCES UNLESS OTHERWISE SPECIFIED .XX ± ~ .XXX ± ~ ANGULAR ± ~

DO NOT SCALE THIS PRINT

		DATE
DRAWN BY	JAMES WONG	6/1/78
CHK BY	[illegible]	[illegible]
PROJ ENG	[illegible]	6/1/78
MFG ENG	[illegible]	6/1/78
APPD	[illegible]	[illegible]
APPD	[illegible]	6/1/78
ECO NO	[illegible]	

T.F.T. TIME & FREQUENCY TECHNOLOGY INC
3000 Olcott St Santa Clara California 95050
(408) 246-6365

TITLE SCHEMATIC VCXO SYNTHESIZER A2A4

SIZE D DRAWING NO. 6601-2551 REV C

SCALE NONE SHT 1 OF 1

If You Didn't Get This From My Site,
Then It Was Stolen From...
www.SteamPoweredRadio.com

NEXT ASSY	USED ON
5102-2900	7700

REVISIONS

SYM	DESCRIPTION	DR	CHK	AUTH	DATE
B	REL FOR PRODUCTION	D.H.	C.T	461	7/12/73
C	RVC PER ECO 658	MY	[illegible]	[illegible]	[illegible]
D	REVISED PER ECO 846	KK	[illegible]	[illegible]	[illegible]

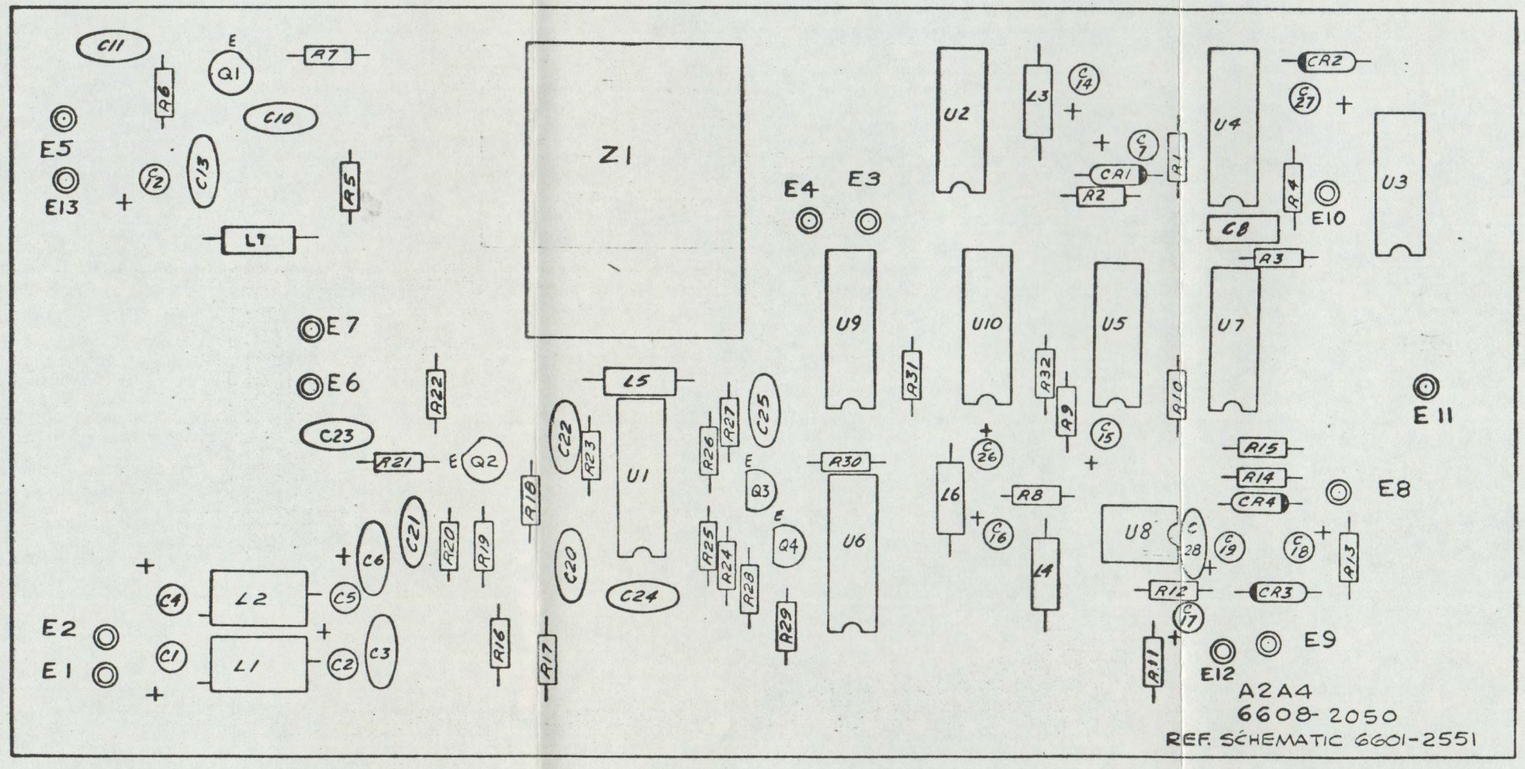

2. FOR SCHEMATIC SEE 6601-2551
1. FOR MATERIAL LIST SEE 6608-2050
NOTES: UNLESS OTHERWISE SPECIFIED

ITEM NO.	EN NO	PART NO.	DESCRIPTION	REF DES	QTY PER ASSY

LIST OF MATERIALS

REMOVE ALL BURRS AND SHARP EDGES

TOLERANCES UNLESS OTHERWISE SPECIFIED
.XX ± ~ ANGULAR ± ~
.XXX ± ~

DO NOT SCALE THIS PRINT

		DATE
DRAWN BY	D. HARTE	7/12/73
CHK BY	KK	7/12/73
PROJ. ENG.	[illegible]	7/12/73
MFG. ENG.	[illegible] Hawley	7/12/73
APPD	[illegible]	[illegible]
APPD	[illegible]	7/9/73
ECO NO.		

TFT TIME & FREQUENCY TECHNOLOGY INC
3000 Olcott St., Santa Clara, California 95051
(408) 246-6365

TITLE PCBD ASSEMBLY VCXO SYNTHESIZER A2A4

SIZE C | DRAWING NO 6608-2050 | REV 0
SCALE 1/1 | SHT 1 OF 1

DWG. NO. 6608-2050

www.SteamPoweredRadio.Com

BISHOP GRAPHICS/ACCUPRESS
REORDER NO. A-8835

Model 7700 A2A4 VCXO SYNTH Assembly #6608-2050 Rev D

CKT REF	DESCRIPTION	QTY	TFT STOCK NO.
C1	Cap Tan 10 MFD 20V 10%	1	1008-0100
C2	Cap Tan 10 MFD 20V 10%	1	1008-0100
C3	Cap Cer Disc .01UF	1	1005-1039
C4	Cap Tan 10MFD 20V 10%	1	1008-0100
C5	Cap Tan 10 MFD 20V 10%	1	1008-0100
C6	Cap Cer Disc .01UF	1	1005-1039
C7	Cap Tan 10 MFD 20V 10%	1	1008-0100
C8	Cap Cer Disc 120 PF 5%	1	1005-0121
C10	Cap Cer Disc .01UF	1	1005-1039
C11	Cap Cer Disc .01UF	1	1005-1039
C12	Cap Tan 10 MFD 20V 10%	1	1008-0100
C13	Cap Cer Disc .01UF	1	1005-1039
C14	Cap Tan 10 MFD 20V 10%	1	1008-0100
C15	Cap Tan 10 MFD 20V 10%	1	1008-0100
C16	Cap Tan 10 MFD 20V 10%	1	1008-0100
C17	Cap Tan 10 MFD 20V 10%	1	1008-0100
C18	Cap Tan 10 MFD 20V 10%	1	1008-0100
C19	Cap Tan 10 MFD 20V 10%	1	1008-0100
C20	Cap Cer Disc .01UF	1	1005-1039
C21	Cap Cer Disc .01UF	1	1005-1039
C22	Cap Cer Disc .01UF	1	1005-1039
C23	Cap Cer Disc .01UF	1	1005-1039
C24	Cap Cer Disc .01UF	1	1005-1039
C25	Cap Cer Disc .01UF	1	1005-1039
C26	Cap Tan 10 MFD 20V 10%	1	1008-0100
C27	Cap Tan 10 MFD 20V 10%	1	1008-0100
C28	Cap Cer Disc 27 PF	1	1005-0270
CR1	DIO 1N3064	1	1281-3064
CR2	DIO 1N3064	1	1281-3064
CR3	DIO 1N3064	1	1281-3064
CR4	DIO 1N3064	1	1281-3064
L1	Choke RF 2 1/2 T	1	1530-0025
L2	Choke RF 2 1/2 T	1	1530-0025
L3	Choke RF 15 UH	1	1530-0150
L4	Choke RF 15 UH	1	1530-0150
L5	Choke RF 15 UH	1	1530-0150
L6	Choke RF 15 UH	1	1530-0150
L7	Choke RF 15 UH	1	1530-0150
Q1	Trans 2N4275	1	1271-4275
Q2	Trans 2N3563	1	1271-3563
Q3	Trans 2N4916 771	1	1271-4916

www.SteamPoweredRadio.Com

Model 7700 A2A4 VCXO SYNTH Assembly # 6608-2050
Rev D

CKT REF	DESCRIPTION	QTY	TFT STOCK NO.
Q4	Trans 2N4916 771	1	1271-4916
R1	Res Car Comp 1/4W 5% 1K	1	1065-1001
R2	Res Car Comp 1/4W 5% 47K	1	1065-4702
R3	Res Car Comp 1/4W 5% 820	1	1065-0820
R4	Res Car Comp 1/4W 5% 10K	1	1065-1002
R5	Res Car Comp 1/4W 5% 100	1	1065-0100
R6	Res Car Comp 1/4W 5% 1K	1	1065-1001
R7	Res Car Comp 1/4W 5% 4.7K	1	1065-4701
R8	Res Car Comp 1/4W 5% 33K	1	1065-3302
R9	Res Car Comp 1/4W 5% 33K	1	1065-3302
R10	Res Car Comp 1/4W 5% 68K	1	1065-6802
R11	Res Car Comp 1/4W 5% 100	1	1065-0100
R12	Res Car Comp 1/4W 5% 100	1	1065-0100
R13	Res Car Comp 1/4W 5% 1K	1	1065-1001
R14	Res Car Comp 1/4W 5% 68K	1	1065-6802
R15	Res Car Comp 1/4W 5% 1M	1	1065-1004
R16	Res Car Comp 1/4W 5% 3.9K	1	1065-3901
R17	Res Car Comp 1/4W 5% 39	1	1065-0039
R18	Res Car Comp 1/4W 5% 220	1	1065-0220
R19	Res Car Comp 1/4W 5% 39	1	1065-0039
R20	Res Car Comp 1/4W 5% 4.7K	1	1065-4701
R21	Res Car Comp 1/4W 5% 47	1	1065-0047
R22	Res Car Comp 1/4W 5% 390	1	1065-0390
R23	Res Car Comp 1/4W 5% 100	1	1065-0100
R24	Res Car Comp 1/4W 5% 470	1	1065-0470
R25	Res Car Comp 1/4W 5% 470	1	1065-0470
R26	Res Car Comp 1/4W 5% 1K	1	1065-1001
R27	Res Car Comp 1/4W 5% 51	1	1065-0051
R28	Res Car Comp 1/4W 5% 1K	1	1065-1001
R29	Res Car Comp 1/4W 5% 220	1	1065-0220
R30	Res Car Comp 1/4W 5% 1K	1	1065-1001
R31	Res Car Comp 1/4W 5% 1K	1	1065-1001
R32	Res Car Comp 1/4W 5% 1K	1	1065-1001
U1	I/C MC10135L	1	1100-1135
U2	I/C SN7490N	1	1100-7490
U3	I/C SN74LS00N	1	1101-7400
U4	I/C SN74123	1	1100-7414
U5	I/C MC4044	1	1100-4044
U6	I/C DM74LS112N Dual JK FF	1	1101-7112
U7	I/C SN74LS00N	1	1101-7400
U8	I/C OP AMP CA3140	1	1100-3140
U9	I/C DM7LS112N Dual JK FF	1	1101-7112

www.SteamPoweredRadio.Com

Model 7700 A2A4 VCXO SYNTH Assembly #6608-2050
Rev D

CKT REF	DESCRIPTION	QTY	TFT STOCK NO.
U10	I/C DM7LS112N Dual JK FF	1	1101-7112
Z1	Crystal OSC TCXO 10 MHZ	1	2450-1002
A2A4	P.C. BD 7700 A2A4	1	1600-2050
	Socket I/C 8 Pin	1	2250-1008
	Socket I/C 14 Pin	4	2250-1014
	Socket I/C 16 PIn	5	2250-1016
ASCH	Schematic		6601-2551
	Test Proc.		5104-0101
	Loading Dia.		6608-2050

www.SteamPoweredRadio.Com

NEXT ASSY	USED ON
6608-2090	7700

REVISIONS

SYM	DESCRIPTION	DR	CHK	AUTH	DATE
A	[illegible]	KK	[illegible]	461	[illegible]
B	REV PER ECO 704	MY	[illegible]	[illegible]	5-4-9

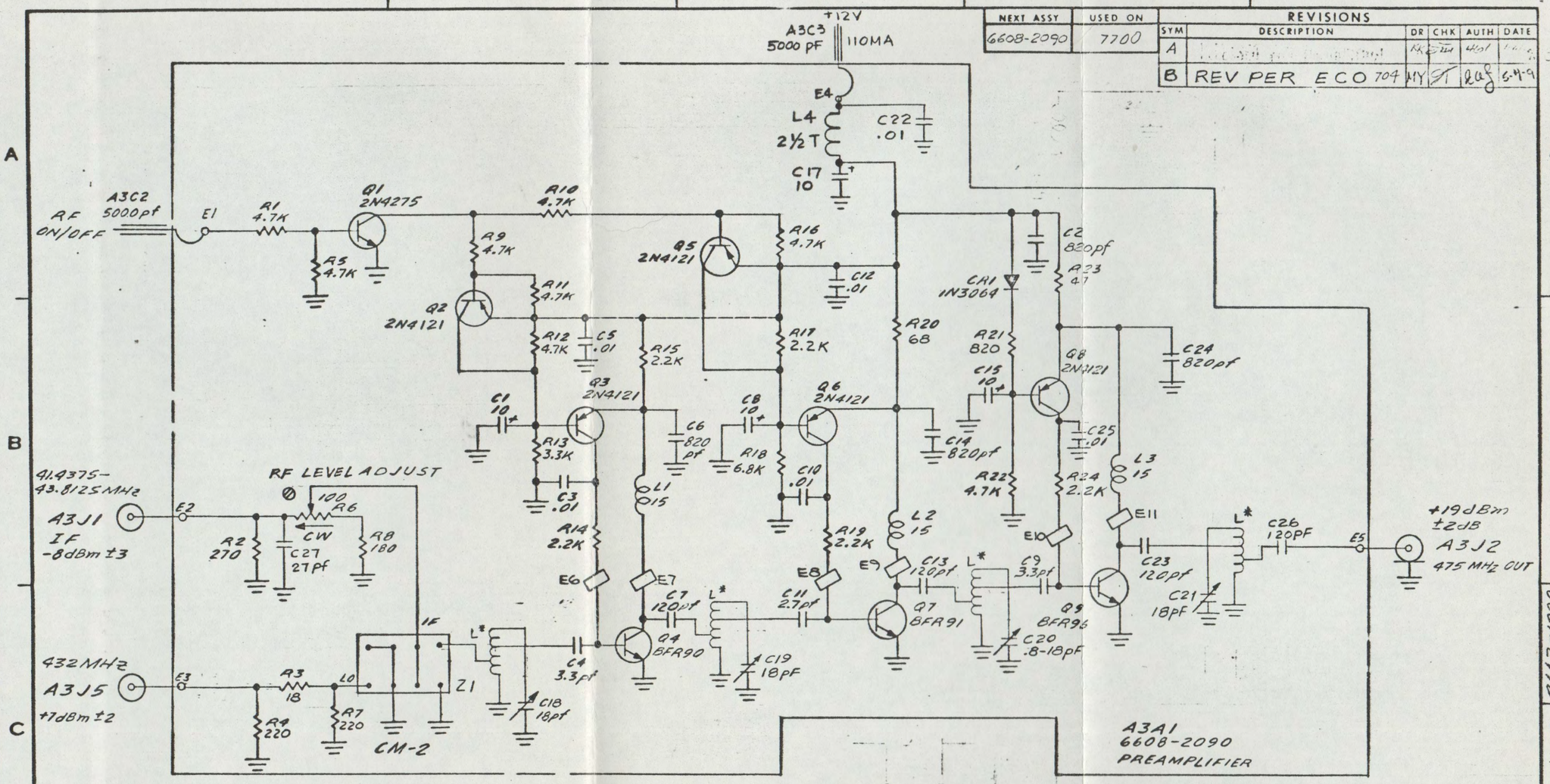

NOTES: UNLESS OTHERWISE SPECIFIED;
1. RESISTOR VALUES ARE IN OHMS ±5%, ¼ WATT.
2. CAPACITORS VALUES ARE IN MICROFARADS.
3. INDUCTORS VALUES ARE IN MICROHENRY ±10%.
4. * STRIP LINE INDUCTOR

REFERENCE DESIGNATORS	
LAST USED	NOT USED
C27	C16
CR1	
E11	
L4	
Q9	
R24	
Z1	

QTY PER ASSY	ITEM NO.	EN NO	PART NO.	DESCRIPTION	REF DES

LIST OF MATERIALS

REMOVE ALL BURRS AND SHARP EDGES

TOLERANCES UNLESS OTHERWISE SPECIFIED
.XX ± ANGULAR
.XXX ± ±

DO NOT SCALE THIS PRINT

		DATE
DRAWN BY	[illegible]	4/25/78
CHK. BY	[illegible]	4/25/78
PROJ ENG	[illegible]	7/21/78
MFG ENG	E Hawley	8/8/78
APPD	QA [illegible]	[illegible]
APPD.		
ECO NO	461	

TFT TIME & FREQUENCY TECHNOLOGY INC
3000 Olcott St., Santa Clara, California 95051
(408) 246-6365

TITLE PREAMPLIFIER A3A1, FIG 6-8

SIZE C DRAWING NO 6601-2770 REV B

SCALE SHT 1 OF 1

EC 8

BISHOP GRAPHICS/ACCUPRESS REORDER NO. A-8835

If You Didn't Get This From My Site,
Then It Was Stolen From...
www.SteamPoweredRadio.Com

NEXT ASSY	USED ON
5102-2910	771
	7700

REVISIONS

SYM	DESCRIPTION	DR	CHK	AUTH	DATE
C	REL. TO PROD.	AD		461	7-13-78
D	REV PER ECO 706	MY			5-24-79
E	REV PER ECO 859	MY			7/2/79

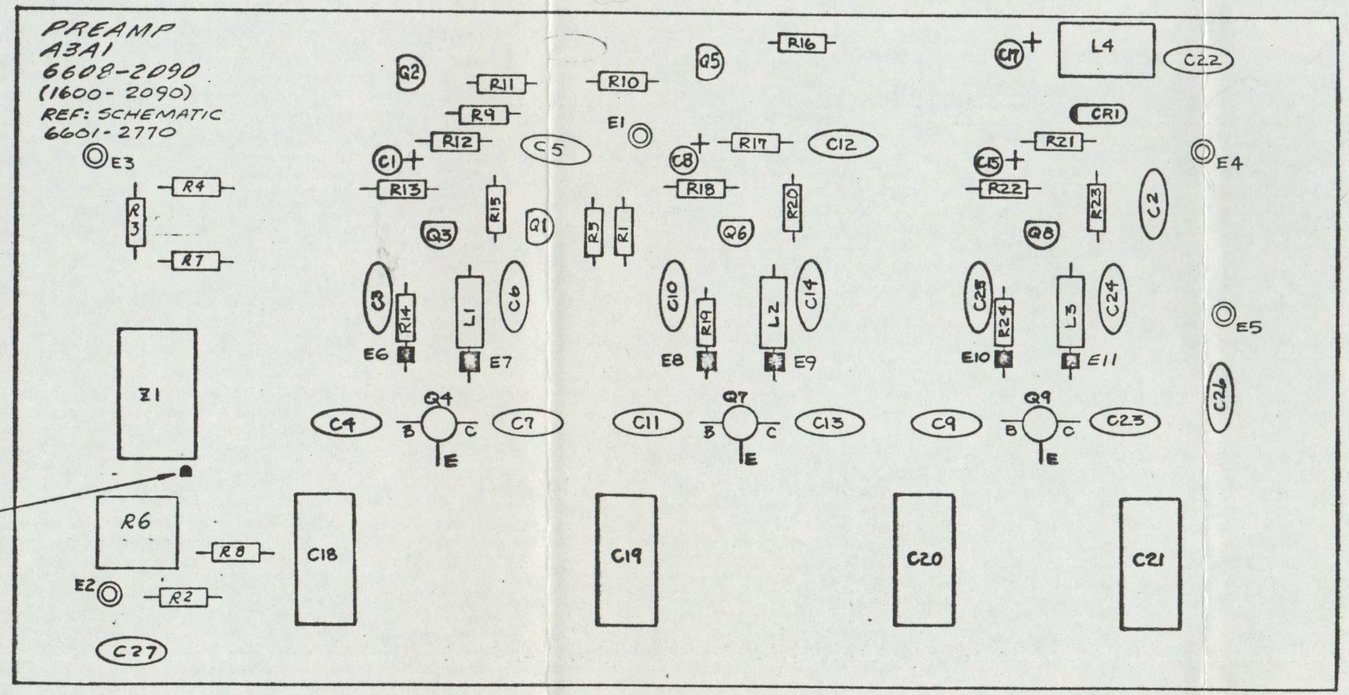

3 KEY TAB DENOTES PIN 1 (BLUE BEAD) OF Z1 FOR BOTH MINI-CIRCUITS AND CIMARRON TYPE MIXERS.

2. FOR SCHEMATIC SEE 6601-2770

1. FOR MATERIAL LIST SEE 6608-2090.

NOTES UNLESS OTHERWISE SPECIFIED:

QTY PER ASSY	ITEM NO.	EN NO.	PART NO.	DESCRIPTION	REF DES.

LIST OF MATERIALS

REMOVE ALL BURRS AND SHARP EDGES

TOLERANCES UNLESS OTHERWISE SPECIFIED
.xx ± ~ ANGULAR ± ~
.xxx ± ~

DO NOT SCALE THIS PRINT

		DATE
DRAWN BY	A. DOXIE	7-13-78
CHK BY	KK	7/21/78
PROJ. ENG.	J.S. Smith	7/21/78
MFG. ENG.	[illegible]	[illegible]
APPD	GA RK	[illegible]
APPD	[illegible]	7/21/78
ECO NO		

TFT TIME & FREQUENCY TECHNOLOGY INC
3000 Olcott St., Santa Clara, California 95051
(408) 246-6365

TITLE P.C. BOARD ASSY. A3A1 PREAMP.

SIZE	DRAWING NO	REV
C	6608-2090	E

SCALE 2:1 SHT 1 OF 1

DWG. NO. 6608-2090

www.SteamPoweredRadio.Com

BISHOP GRAPHICS/ACCUPRESS REORDER NO. A-8835

Model 7700 Preamp A3A1 Assembly #6608-2090
Rev E

CKT REF	DESCRIPTION	QTY	TFT STOCK NO.
C1	Cap Tant 10 UF 20V 10%	1	1008-0100
C2	Cap Cer Disc 820 PF	1	1005-0821
C3	Cap Cer Disc .01 UF	1	1005-1039
C4	Cap Cer NPO 3.3 PF	1	1005-0033
C5	Cap Cer Disc .01 UF	1	1005-1039
C6	Cap Cer Disc 820 PF	1	1005-0821
C7	Cap Cer Disc 120 PF 5%	1	1005-0121
C8	Cap Tant 10 UF 20V 10%	1	1008-0100
C9	Cap Cer NPO 3.3 PF	1	1005-0033
C10	Cap Cer Disc .01 UF	1	1005-1039
C11	Cap Cer NPO 2.7 PF	1	1005-0027
C12	Cap Cer Disc .01 UF	1	1005-1039
C13	Cap Cer Disc 120 PF 5%	1	1005-0121
C14	Cap Cer Disc 820 PF	1	1005-0821
C15	Cap Tant 10 UF 10%	1	1008-0100
C16	Not used		
C17	Cap Tant 10 UF 10%	1	1008-0100
C18	Cap Var .8-18 PF	1	1012-0818
C19	Cap Var .8-18 PF	1	1012-0818
C20	Cap Var .8-18 PF	1	1012-0818
C21	Cap Var .8-18 PF	1	1012-0818
C22	Cap Cer Disc .01 UF	1	1005-1039
C23	Cap Cer Disc 120 PF 5%	1	1005-0121
C24	Cap Cer Disc 820 PF	1	1005-0821
C25	Cap Cer Disc .01 UF	1	1005-1039
C26	Cap Cer Disc 120 PF 5%	1	1005-0121
C27	Cap Cer Disc 27 PF	1	1005-0270
CR1	Dio 1N3064	1	1281-3064
E6	Shielding Beads	1	1501-0654
E7	Shielding Beads	1	1501-0654
E8	Shielding Beads	1	1501-0654
E9	Shielding Beads	1	1501-0654
E10	Shielding Beads	1	1501-0654
E11	Shielding Beads	1	1501-0654
L1	Choke RF 15 UH	1	1530-0150
L2	Choke RF 15 UH	1	1530-0150
L3	Choke RF 15 UH	1	1530-0150
L4	Choke RF 2 1/2 Turn	1	1530-0025
Q1	Trans 2N4275	1	1271-4275
Q2	Trans 2N4121	1	1271-4275
Q3	Trans 2N4121	1	1271-4121

www.SteamPoweredRadio.Com

Model 7700 Preamp A3A1 Assembly #6608-2090
Rev E

CKT REF	DESCRIPTION	QTY	TFT STOCK NO.
Q4	Trans BFR90	1	1271-0090
Q5	Trans 2N4121	1	1271-4121
Q6	Trans 2N4121	1	1271-4121
Q7	Trans BFR91	1	1271-0091
Q8	Trans 2N4121	1	1271-4121
Q9	Trans BFR96	1	1271-0096
R1	Res Car Comp 1/4W 5% 4.7K	1	1065-4701
R2	Res Car Comp 1/4W 5% 270	1	1065-0270
R3	Res Car Comp 1/4W 5% 18	1	1065-0018
R4	Res Car Comp 1/4W 5% 220	1	1065-0220
R5	Res Car Comp 1/4W 5% 4.7K	1	1065-4701
R6	Res Var PC MT 100 1T	1	1072-0100
R7	Res Car Comp 1/4W 5% 220	1	1065-0220
R8	Res Car Comp 1/4W 5% 180	1	1065-0180
R9	Res Car Comp 1/4W 5% 4.7K	1	1065-4701
R10	Res Car Comp 1/4W 5% 4.7K	1	1065-4701
R11	Res Car Comp 1/4W 5% 4.7K	1	1065-4701
R12	Res Car Comp 1/4W 5% 4.7K	1	1065-4701
R13	Res Car Comp 1/4W 5% 3.3K	1	1065-3301
R14	Res Car Comp 1/4W 5% 2.2K	1	1065-2201
R15	Res Car Comp 1/4W 5% 2.2K	1	1065-2201
R16	Res Car Comp 1/4W 5% 4.7K	1	1065-4701
R17	Res Car Comp 1/4W 5% 2.2K	1	1065-2201
R18	Res Car Comp 1/4W 5% 6.8K	1	1065-6801
R19	Res Car Comp 1/4W 5% 2.2K	1	1065-2201
R20	Res Car Comp 1/4W 5% 68	1	1065-0068
R21	Res Car Comp 1/4W 5% 820	1	1065-0820
R22	Res Car Comp 1/4W 5% 4.7K	1	1065-4701
R23	Res Car Comp 1/4W 5% 47	1	1065-0047
R24	Res Car Comp 1/4W 5% 2.2K	1	1065-2201
Z1	Mixer CM-2	1	4500-0003
A3A1	P.C. Bd	1	1600-2090
ASCH	Schematic	1	6601-2770
	Test Procedure		5104-0102
	Loading diagram		6608-2090

www.SteamPoweredRadio.Com

NEXT ASSY	USED ON
6608-2170	7700

REVISIONS

SYM	DESCRIPTION	DR	CHK	AUTH	DATE
A	PROTOTYPE RELEASE	TC		467	[illegible]
B	REV PER ECO 696	AC		[illegible]	4-9-79
C	REV PER ECO 809	AC		[illegible]	7-5-79
D	REV PER ECO 907	MY			8/27/79

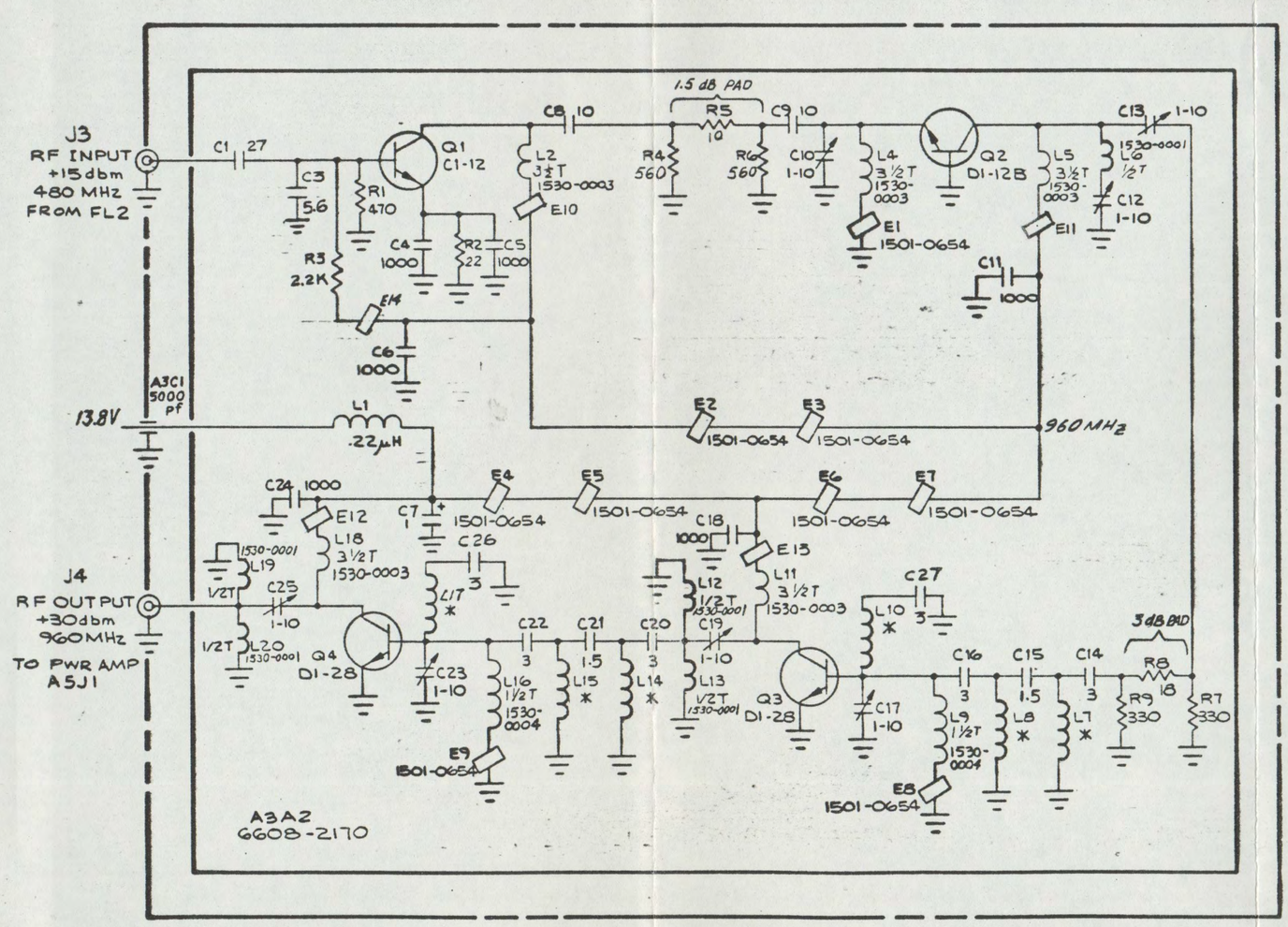

REFERENCE DESIGNATORS

LAST USED	NOT USED
C27	L3
E14	C2
L20	
Q4	
R9	

3. * INDICATES COMPONENT ETCHED ON BOARD
2. CAPACITOR VALUES ARE IN PICOFARADS
1. RESISTOR VALUES ARE IN OHMS, 5%, 1/4W
NOTES, UNLESS OTHERWISE SPECIFIED:

ITEM NO.	EN NO.	PART NO.	DESCRIPTION	REF DES
QTY PER ASSY			LIST OF MATERIALS	

REMOVE ALL BURRS AND SHARP EDGES

TOLERANCES UNLESS OTHERWISE SPECIFIED
.XX ± ~
.XXX ± ~
ANGULAR ± ~

DO NOT SCALE THIS PRINT

		DATE
DRAWN BY	[illegible]	6-7-78
CHK BY	[illegible]	7/11/78
PROJ ENG	[illegible]	1/5/79
MFG ENG	[illegible]	8/8/79
APPD	[illegible]	[illegible]
APPD		
ECO NO	467	

TFT TIME & FREQUENCY TECHNOLOGY INC
3000 Olcott St., Santa Clara, California 95051
(408) 246-6365

TITLE A3A2
RF DOUBLER AMP
MODEL 7700, FIG 6.9

SIZE C | DRAWING NO 6601-2320 | REV D
SCALE ~ | SHT 1 OF 1

DWG. NO. 6601-2820

If You Didn't Get This From My Site,
Then It Was Stolen From...
www.SteamPoweredRadio.Com

BISHOP GRAPHICS/ACCUPRESS
REORDER NO. A-8835

NEXT ASSY	USED ON
5102-2910	771
	7700

REVISIONS					
SYM	DESCRIPTION	DR	CHK	AUTH	DATE
A	REL TO PROD	TD			7-17-73
B	Revised per ECO 697	AC			5-24-77
C	REV PER ECO 810	AC			7-5-77
D	REVISED PER ECO 870	KK			

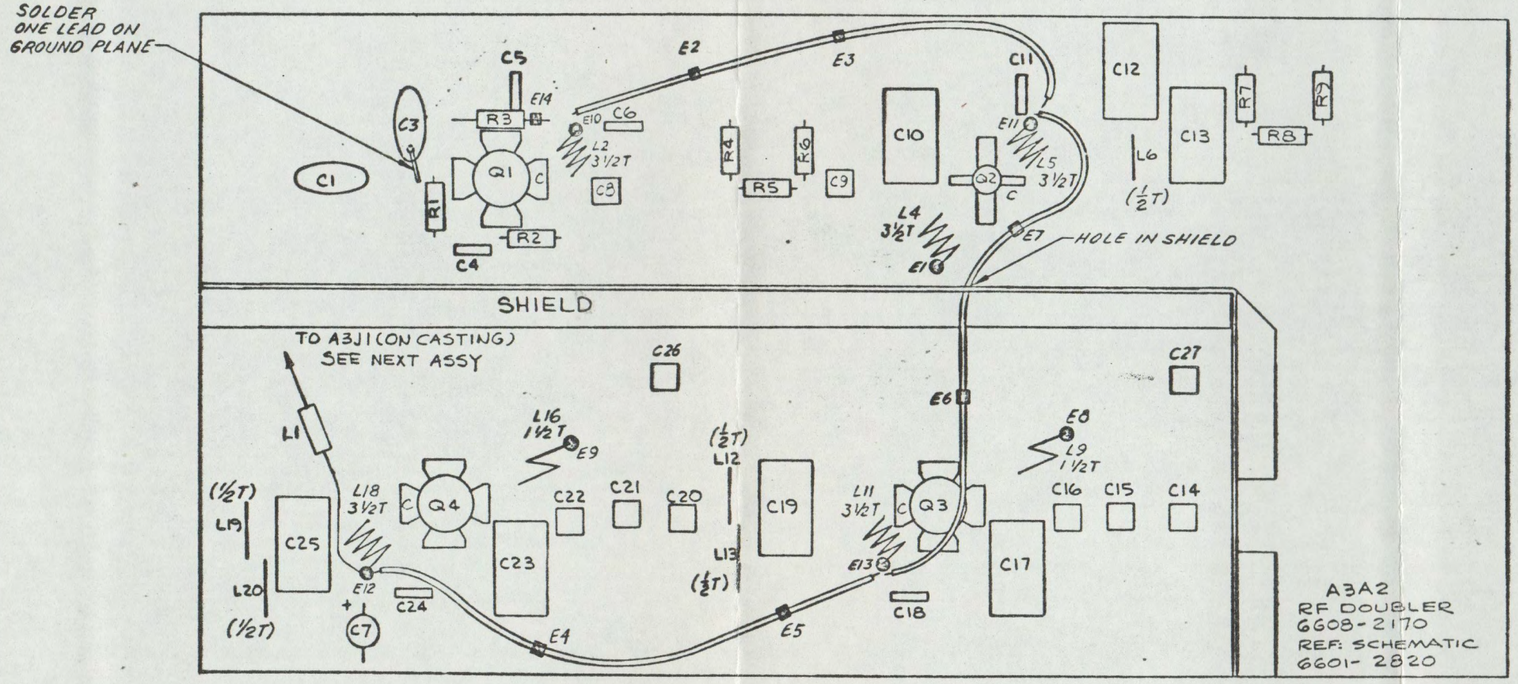

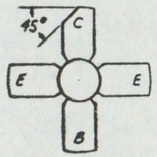

DETAIL FOR TRANSISTORS

MOUNTING PICTURE FOR INDUCTORS

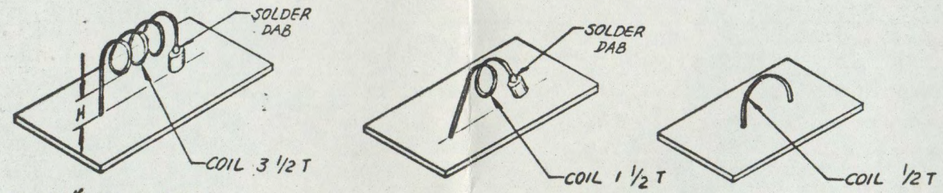

H=1/16" BETWEEN PCB AND COIL TYP

4. ALL FERRITE BEADS SECURED BY RTV 108
3. COIL DRAWING NUMBERS; 1530-0001, 1530-0003, 1530-0004.
2. CHIP CAPACITORS SURFACE SOLDERED.
1. FOR MATERIAL LIST SEE 6608-2170

NOTES, UNLESS OTHERWISE SPECIFIED;

ITEM NO.	EN NO	PART NO.	DESCRIPTION	REF DES	QTY PER ASSY

LIST OF MATERIALS

REMOVE ALL BURRS AND SHARP EDGES

TOLERANCES UNLESS OTHERWISE SPECIFIED
.XX ± ANGULAR ±
.XXX ±

DO NOT SCALE THIS PRINT

		DATE
DRAWN BY		7-17
CHK BY		6/24/77
PROJ. ENG		7/1/77
MFG ENG		
APPD		
APPD		
ECO NO		

TFT TIME & FREQUENCY TECHNOLOGY INC
3000 Olcott St., Santa Clara, California 95051
(408) 246-6365

TITLE P.C. BD. ASSY RF DOUBLER, A3A2

SIZE C | DRAWING NO 6608-2170 | REV D

SCALE | SHT 1 OF 1

DWG. NO. 6608-2170

www.SteamPoweredRadio.Com

BISHOP GRAPHICS/ACCUPRESS REORDER NO. A-8835

Model 7700 RF Doubler Amp A3A2 Assembly #6608-2170
Rev D

CKT REF	DESCRIPTION	QTY	TFT STOCK NO.
C1	Cap Cer Disc 27 PF	1	1005-0271
C3	Cap Cer Disc 5.6 PF	1	1005-0056
C4	Cap Chip 1000 PF	1	1009-1002
C5	Cap Chip 1000 PF	1	1009-1002
C6	Cap Chip 1000 PF	1	1009-1002
C7	Cap Tant 1 UF 35V	1	1008-0011
C8	Cap Chip 10 PF	1	1009-0100
C9	Cap Chip 10 PF	1	1009-0100
C10	Cap Var 1-10 PF	1	1012-0110
C11	Cap Chip 1000 PF	1	1009-1002
C12	Cap Var 1-10 PF	1	1012-0110
C13	Cap Var 1-10 PF	1	1012-0110
C14	Cap Chip 3 PF	1	1009-0030
C15	Cap Chip 1.5 PF	1	1009-0015
C16	Cap Chip 3 PF	1	1009-0030
C17	Cap Var 1-10 PF	1	1012-0110
C18	Cap Chip 1000 PF	1	1009-1002
C19	Cap Var 1-10 PF	1	1012-0110
C20	Cap Chip 3 PF	1	1009-0030
C21	Cap Chip 1.5 PF	1	1009-0015
C22	Cap Chip 3 PF	1	1009-0030
C23	Cap Var 1-10 PF	1	1012-0110
C24	Cap Chip 1000 PF	1	1009-1002
C25	Cap Var 1-10 PF	1	1012-0110
C26	Cap Chip 3 PF	1	1009-0030
C27	Cap Chip 3 PF	1	1009-0030
E1	Shielding Beads	1	1501-0654
E2	Shielding Beads	1	1501-0654
E3	Shielding Beads	1	1501-0654
E4	Shielding Beads	1	1501-0654
E5	Shielding Beads	1	1501-0654
E6	Shielding Beads	1	1501-0654
E7	Shielding Beads	1	1501-0654
E8	Shielding Beads	1	1501-0654
E9	Shielding Beads	1	1501-0654
E10	Shielding Beads	1	1501-0654
E11	Shielding Beads	1	1501-0654
E12	Shielding Beads	1	1501-0654
E13	Shielding Beads	1	1501-0654
E14	Shielding Beads	1	1501-0654
L1	Choke .22 UH	1	1531-0020
L2	Inductor 3 1/2T Turn	1	1530-0002

www.SteamPoweredRadio.Com

CKT REF	DESCRIPTION	QTY	TFT STOCK NO.
L3	Not Used		
L4	Inductor 3 1/2T Turn	1	1530-0003
L5	Inductor 3 1/2T Turn	1	1530-0003
L6	Inductor 1/2 Turn	1	1530-0001
L7	Etched on P.C. Bd.		
L8	Etched on P.C. Bd.		
L9	Inductor 1 1/2T Turn	1	1530-0004
L10	Etched on P.C. Bd.		
L11	Inductor 3 Turn	1	1530-0003
L12	Inductor 1/2 Turn	1	1530-0001
L13	Inductor 1/2 Turn	1	1530-0001
L14	Etched on P.C. Bd.		
L15	Etched on P.C. Bd.		
L16	Inductor 1 1/2T Turn	1	1530-0004
L17	Etched on P.C. Bd.		
L18	Inductor 3 1/2T Turn	1	1530-0003
L19	Inductor 1/2 Turn	1	1530-0001
L20	Inductor 1/2 Turn	1	1530-0001
Q1	Trans C1-12	1	1271-1120
Q2	Trans D1-12B	1	1271-1121
Q3	Trans D1-28	1	1271-1280
Q4	Trans D1-28	1	1271-1280
R1	Res Car Comp 1/4W 5% 470	1	1065-0470
R2	Res Car Comp 1/4W 5% 22	1	1065-0022
R3	Res Car Comp 1/4W 5% 2.2K	1	1065-2201
R4	Res Car Comp 1/4W 5% 560	1	1065-0560
R5	Res Car Comp 1/4W 5% 10	1	1065-0010
R6	Res Car Comp 1/4W 5% 560	1	1065-0560
R7	Res Car Comp 1/4W 5% 330	1	1065-0330
R8	Res Car Comp 1/4W 5% 18	1	1065-0018
R9	Res Car Comp 1/4W 5% 330	1	1065-0330
	P.C. Bd Doubler Amp	1	1600-2170
	Shield, Doubler	1	2001-2490
ASCH	Schematic	Ref	6601-2820
	Test Procedure	Ref	5104-0132

www.SteamPoweredRadio.Com

NEXT ASSY	USED ON
6608-2060	7700

REVISIONS

SYM	DESCRIPTION	DR	CHK	AUTH	DATE
A		D		461	
B	REV PER ECO	MY		646	5-7-9
C	REV PER ECO 829	A.C			

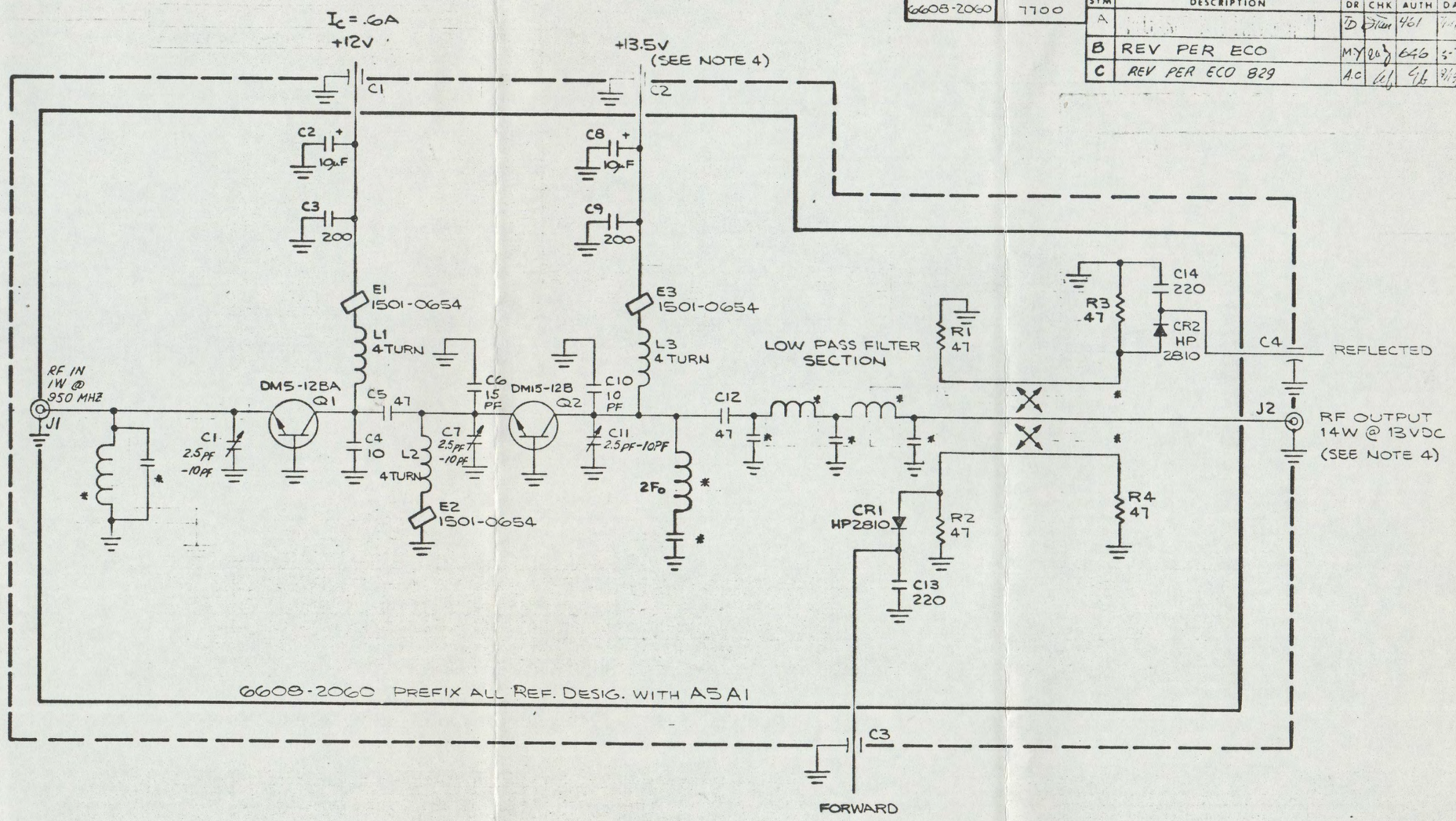

5. * IND. COMP. ETCHED ON PCB.

4. OUTPUT PWR TO BE CONTROLLED BY
· VARYING SUPPLY VOLTAGE. MAXIMUM
· AVAILABLE SUPPLY VOLTAGE IS +13.5V

3. L1, L2, L3 ARE 4 TURNS OF 20 GAUGE SOLID
· WIRE WITH A .30 INSIDE DIA.

2. CAPACITOR VALUES ARE IN PICOFARADS

1. RESISTOR VALUES ARE IN OHMS, 1/8W, 5%, CAR. COMP.

NOTES, UNLESS OTHERWISE SPECIFIED;

ITEM NO.	EN NO	PART NO.	DESCRIPTION	REF. DES
QTY PER ASSY			LIST OF MATERIALS	

REMOVE ALL BURRS AND SHARP EDGES

TOLERANCES UNLESS OTHERWISE SPECIFIED
.xx ± ~ ANGULAR ± ~
.xxx ± ~

DO NOT SCALE THIS PRINT

		DATE
DRAWN BY		5/21
CHK. BY		7/11
PROJ. ENG.		11/17
MFG. ENG.		
APPD.		
APPD.		
ECO NO.	461	

TFT TIME & FREQUENCY TECHNOLOGY INC
3000 Olcott St., Santa Clara, California 95051
(408) 246-6365

TITLE SCHEMATIC POWER AMPLIFIER A5, FIG 6.10

SIZE C | DRAWING NO 6601-2780 | REV C

SCALE ~ | SHT 1 OF 1

DWG. NO. 6601-2780

If You Didn't Get This From My Site,
Then It Was Stolen From...
www.SteamPoweredRadio.Com

BISHOP GRAPHICS/ACCUPRESS
REORDER NO. A-6835

NEXT ASSY	USED ON
6608-2060	7700

REVISIONS

SYM	DESCRIPTION	DR	CHK	AUTH	DATE
A	REL TO PRODUCTION	[illegible]			[illegible]
B	REV/ECO 745	JT	[illegible]	[illegible]	4-25-[illegible]
C	REV PER ECO 808	AC	[illegible]	[illegible]	7-3-7[illegible]

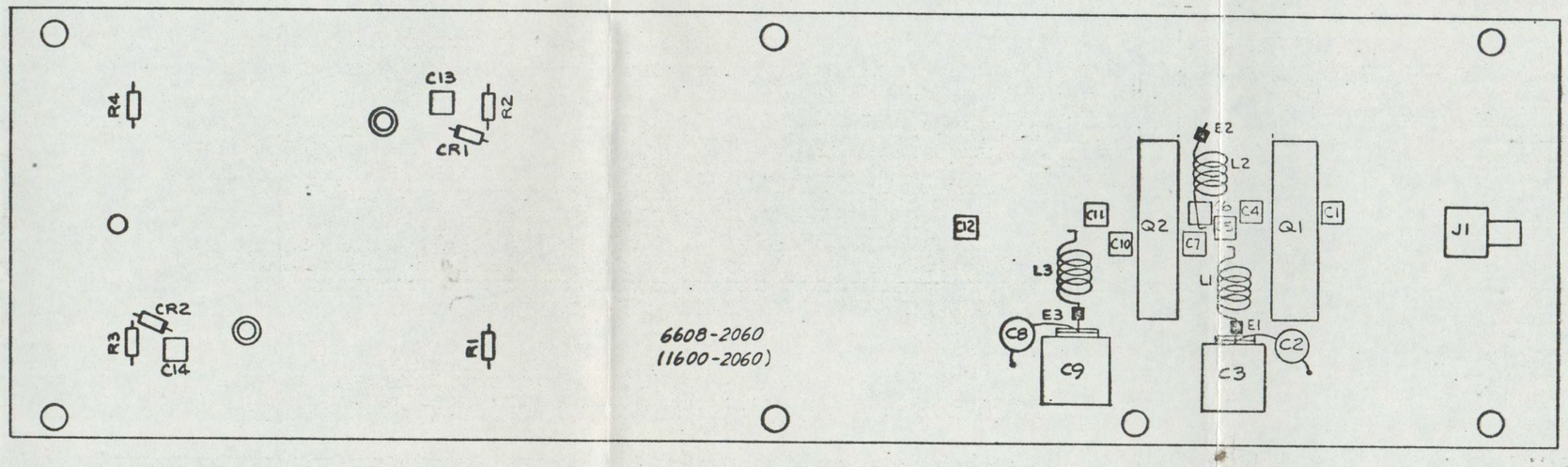

3. FOR MANUAL USE ONLY.
2. FOR SCHEMATIC SEE 6601-2780.
1. FOR MATERIAL LIST SEE 6608-2060
NOTES, UNLESS OTHERWISE SPECIFIED;

QTY PER ASSY	ITEM NO.	EN NO.	PART NO.	DESCRIPTION	REF DES

LIST OF MATERIALS

REMOVE ALL BURRS AND SHARP EDGES

TOLERANCES UNLESS OTHERWISE SPECIFIED
.XX ±
.XXX ± .015
ANGULAR ±

DO NOT SCALE THIS PRINT

		DATE
DRAWN BY	[illegible]	7-1-79
CHK BY	[illegible]	4/27/79
PROJ ENG	[illegible]	4-9-79
MFG ENG		
APPD		
APPD		
ECO NO		

TFT TIME & FREQUENCY TECHNOLOGY INC
3000 Olcott St., Santa Clara, California 95051
(408) 246-6365

TITLE
PC BD ASSY A5A5
POWER AMPLIFIER

SIZE C | DRAWING NO 6600-2135 | REV C

SCALE 2:1 | SHT 1 OF 1

DWG. NO. 6600-2135

www.SteamPoweredRadio.Com

BISHOP GRAPHICS/ACCUPRESS
REORDER NO. A-8835

Model 7700 Pwr. Amp A5 A5 Assembly #6608-2060
Rev C

CKT REF	DESCRIPTION	QTY	TFT STOCK NO.
C1	Cap Var 2.5 -10 pf	1	1012-2510
C2	Cap Tan 10MFD 20V 10%	1	1008-0100
C3	Cap Silmic 200 pf	1	1003-0201
C4	Cap Chip 10 pf	1	1009-0100
C5	Cap Chip 47 pf	1	1009-0470
C6	Cap Chip 15 pf	1	1009-0150
C7	Cap Var 2.5 -10 pf	1	1012-2510
C8	Cap Tan 10 MFD 20V 10%	1	1008-0100
C9	Cap Silmic 200 pf	1	1003-0201
C10	Cap Chip 10 pf	1	1009-0100
C11	Cap Var 2.5 -10 pf	1	1012-2510
C12	Cap Chip 47 pf	1	1009-0470
C13	Cap Chip 220 pf	1	1009-2200
C14	Cap Chip 220 pf	1	1009-2200
CR1	Dio. HP 2810	1	1283-2810
CR2	Dio. HP 2810	1	1283-2810
E1	Shielding Beads	1	1501-0654
E2	Shielding Beads	1	1501-0654
E3	Shielding Beads	1	1501-0654
J1	Conn, RF Sub Mini Rt Ang	1	2210-5153
L1	Choke RF 4 Turn	1	1530-0006
L2	Choke RF 4 Turn	1	1530-0007
L3	Choke RF 4 Turn	1	1530-0006
Q1	Trans CTC DM5-12BA	1	1274-0512
Q2	Trans CTC DM15-12BA	1	1274-1512
R1	Res Car CM 1/8W 5% .047K	1	1064-0047
R2	Res Car CM 1/8W 5% .047K	1	1064-0047
R3	Res Car CM 1/8W 5% .047K	1	1064-0047
R4	Res Car CM 1/8W 5% .047K	1	1064-0047
	P.C. Board	1	1600-2060
ASCH	Schematic		6601-2780
	Copper Foil 3/4 wide	A/R	5001-0003

www.SteamPoweredRadio.Com

NEXT ASSY	USED ON
6608-2080	7700

REVISIONS

SYM	DESCRIPTION	DR	CHK	AUTH	DATE
A	RELEASE				
B	REV PER ECO 689				
C	REV PER ECO 927				

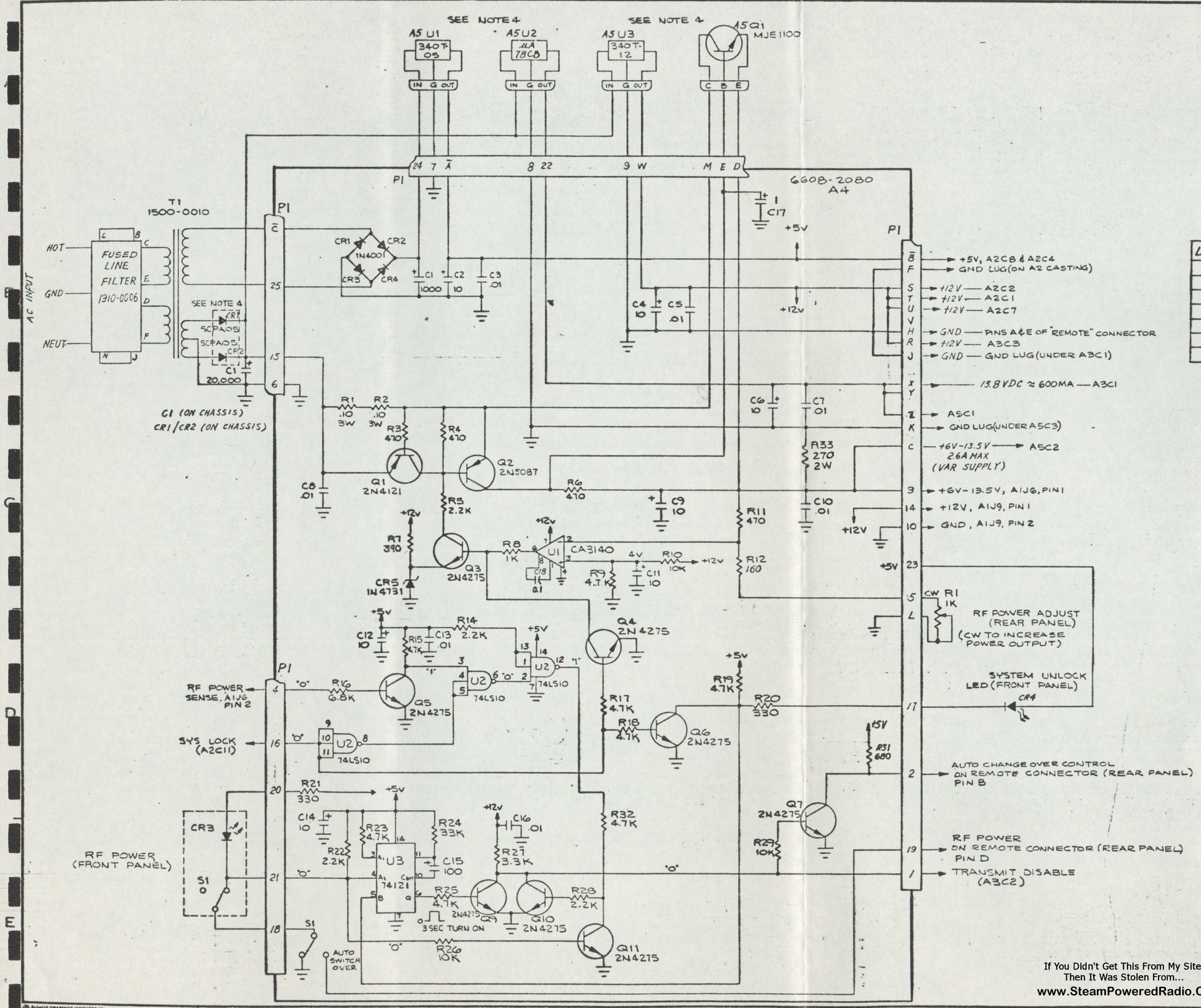

LAST USED	NOT USED
C18	
CR5	
Q11	Q8
R33	R13, R30
S1	
U3	

6. P1 IS PART OF PC BOARD.
5. PREFIX ALL REF DESIG. ON THIS BOARD WITH ASSY DESIG. A4
4. U1, U2, U3, Q1 ARE LOCATED ON REAR PANEL HEATSINK. REF 6600-1800
3. " " INDICATES LOGIC CONDITION FOR OPERATING MODE
2. CAPACITOR VALUES ARE IN MICROFARADS
1. RESISTOR VALUES ARE IN OHMS, 1/4W, ±5%

NOTES, UNLESS OTHERWISE SPECIFIED;

FIG 6-11

QTY PER ASSY	ITEM NO	EM NO	PART NO	DESCRIPTION	REF DES

LIST OF MATERIALS

REMOVE ALL BURRS AND SHARP EDGES

TOLERANCES UNLESS OTHERWISE SPECIFIED .xx ± .xxx ± ANGULAR ±

DO NOT SCALE THIS PRINT

DRAWN BY / CHK BY / PROJ ENG / MFG ENG / APPD / APPD / ECO NO — DATE

TFT TIME & FREQUENCY TECHNOLOGY INC
3000 Olcott St Santa Clara California 95050
(408) 246-6365

TITLE A4 POWER SUPPLY AND FAIL DETECT CIRCUIT

SIZE D DRAWING NO 6601-2790 REV C

SCALE — SHT OF

If You Didn't Get This From My Site,
Then It Was Stolen From...
www.SteamPoweredRadio.Com

BISHOP GRAPHICS/ACCUPRESS REORDER NO. A-1538

NEXT ASSY	USED ON
5102-2940	7700

REVISIONS

SYM	DESCRIPTION	DR	CHK	AUTH	DATE
	REV PER ECO	A.C.	[illegible]	691	5/2/79
C	REV PER ECO 926	M.Y.	[illegible]	[illegible]	[illegible]

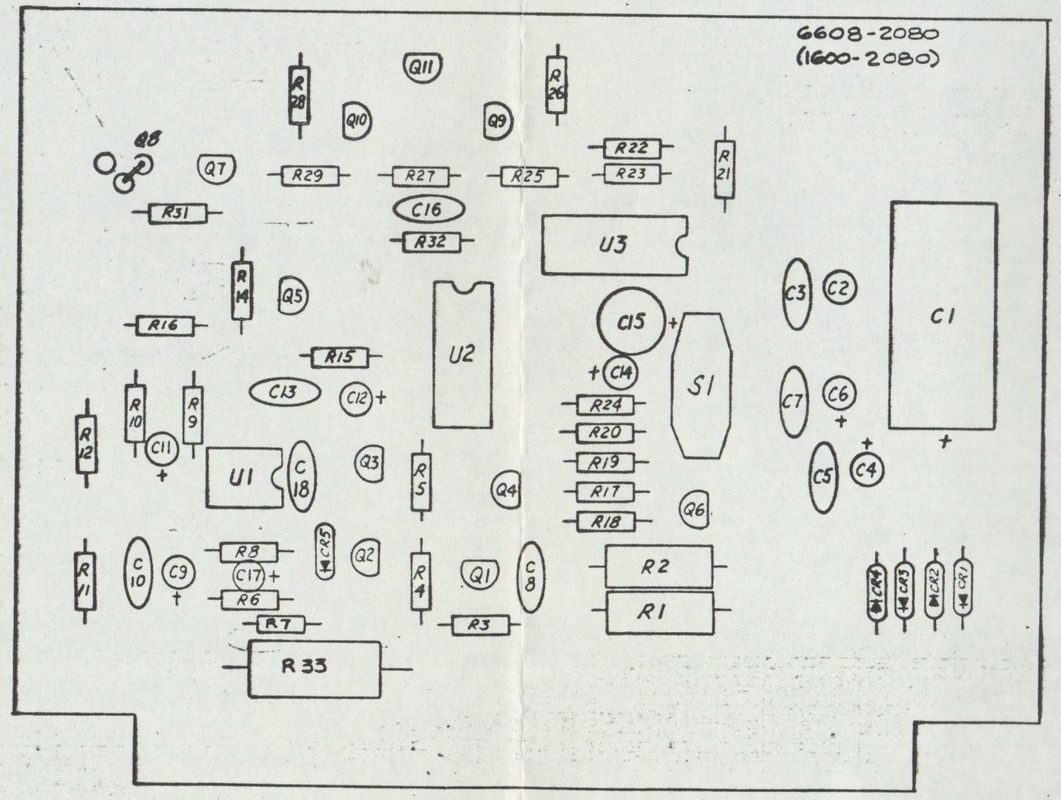

REF: SCHEMATIC 6601-2790

QTY PER ASSY	ITEM NO	EN NO	PART NO	DESCRIPTION	REF DES

LIST OF MATERIALS

REMOVE ALL BURRS AND SHARP EDGES

TOLERANCES UNLESS OTHERWISE SPECIFIED
.XX ± ~ ANGULAR ± ~
.XXX ± ~

DO NOT SCALE THIS PRINT

DRAWN BY Anna Chou	DATE 5/2/79	
CHK. BY [illegible]	5/2/79	
PROJ. ENG. [illegible]	5 29 79	
MFG. ENG. [illegible]	11.79	
APPD.		
APPD.		
ECO NO		

TFT TIME & FREQUENCY TECHNOLOGY INC
3000 Olcott St., Santa Clara, California 95051
(408) 246-6365

TITLE P.C.B. ASSY A4 POWER SUPPLY

SIZE C DRAWING NO 6608-2080 REV C

SCALE SHT 1 OF 1

DWG. NO. 6608-2080

www.SteamPoweredRadio.Com

BISHOP GRAPHICS/ACCUPRESS RECORD 1 NO. A-8835

Model 7700 Power Supply Assembly #6608-2080
Rev C

CKT REF	DESCRIPTION	QTY	TFT STOCK NO.
C1	Cap Elect 1000 MF 15V	1	1010-0102
C2	Cap Tan 10 MF 20V 10%	1	1008-0100
C3	Cap Cer Disc .01 MF	1	1005-0100
C4	Cap Tan 10 MF 20V 10%	1	1008-0100
C5	Cap Cer Disc .01 MF	1	1005-0100
C6	Cap Tan 10 MF 20V 10%	1	1008-0100
C7	Cap Cer Disc .01 MF	1	1005-0100
C8	Cap Cer Disc .01 MF	1	1005-0100
C9	Cap Tan 10 MF 20V 10%	1	1008-0100
C10	Cap Cer Disc .01 MF	1	1005-0100
C11	Cap Tan 10 MF 20V 10%	1	1008-0100
C12	Cap Tan 10 MF 20V 10%	1	1008-0100
C13	Cap Cer Disc .01 MF	1	1005-0100
C14	Cap Tan 10 MF 20V 10%	1	1008-0100
C15	Cap Tan 100 MF 20V 20%	1	1008-0102
C16	Cap Cer Disc .01 MF	1	1005-0100
C17	Cap Tan 1 MF 35V	1	1008-0011
C18	Cap Cer Disc .1 MF 12V	1	1005-0100
CR1	Dio 1N4001 Rect	1	1284-4001
CR2	Dio 1N4001 Rect	1	1284-4001
CR3	Dio 1N4001 Rect	1	1284-4001
CR4	Dio 1N4001 Rect	1	1284-4001
CR5	Dio 1N4731 Zener	1	1283-4731
Q1	Trans 2N4121	1	1271-4121
Q2	Trans 2N5087	1	1271-5087
Q3	Trans 2N4275	1	1271-4275
Q4	Trans 2N4275	1	1271-4275
Q5	Trans 2N4275	1	1271-4275
Q6	Trans 2N4275	1	1271-4275
Q7	Trans 2N4275	1	1271-4275
Q8	Not Used		
Q9	Trans 2N4275	1	1271-4275
Q10	Trans 2N4275	1	1271-4275
Q11	Trans 2N4275	1	1271-4275
R1	Res WW 3 W 5% .1	1	1068-0191
R2	Res WW 3 W 5% .1	1	1068-0191
R3	Res Car Comp 1/4W 5% 470	1	1065-0470
R4	Res Car Comp 1/4W 5% 470	1	1065-0470
R5	Res Car Comp 1/4W 5% 2.2K	1	1065-2201
R6	Res Car Comp 1/4W 5% 470	1	1065-0470
R7	Res Car Comp 1/4W 5% 390	1	1065-0390

www.SteamPoweredRadio.Com

CKT REF	DESCRIPTION	QTY	TFT STOCK NO.
R8	Res Car Comp 1/4W 5% 1K	1	1065-1001
R9	Res Car Comp 1/4W 5% 4.7K	1	1065-4701
R10	Res Car Comp 1/4W 5% 10K	1	1065-1002
R11	Res Car Comp 1/4W 5% 470	1	1065-0470
R12	Res Car Comp 1/4W 5% 160	1	1065-0160
R13	Not Used		
R14	Res Car Comp 1/4W 5% 2.2K	1	1065-2201
R15	Res Car Comp 1/4W 5% 4.7K	1	1065-4701
R16	Res Car Comp 1/4W 5% 6.8K	1	1065-6801
R17	Res Car Comp 1/4W 5% 4.7K	1	1065-4701
R18	Res Car Comp 1/4W 5% 4.7K	1	1065-4701
R19	Res Car Comp 1/4W 5% 4.7K	1	1065-4701
R20	Res Car Comp 1/4W 5% 330	1	1065-0330
R21	Res Car Comp 1/4W 5% 330	1	1065-0330
R22	Res Car Comp 1/4W 5% 2.2K	1	1065-2201
R23	Res Car Comp 1/4W 5% 4.7K	1	1065-4701
R24	Res Car Comp 1/4W 5% 33K	1	1065-3302
R25	Res Car Comp 1/4W 5% 4.7K	1	1065-4701
R26	Res Car Comp 1/4W 5% 10K	1	1065-1002
R27	Res Car Comp 1/4W 5% 3.3K	1	1065-3301
R28	Res Car Comp 1/4W 5% 2.2K	1	1065-2201
R29	Res Car Comp 1/4W 5% 10K	1	1065-1002
R30	Not Used		
R31	Res Car Comp 1/4W 5% 680	1	1065-0680
R32	Res Car Comp 1/4W 5% 4.7K	1	1065-4701
R33	Res Car Comp 2W 5% 270	1	1068-0270
S1	Switch Slide DPDT	1	1840-2200
U1	IC OP Amp CA3140	1	1100-3140
U2	IC SN74LS10N	1	1101-7410
U3	IC SN74121	1	1100-7412
	PC BD 7700 A4	1	1600-2080
	Socket I/C 8 Pin	1	2250-1008
	Socket I/C 14 Pin	2	2250-1014
ASCH	Schematic		6601-2790

www.SteamPoweredRadio.Com

REVISIONS				
ZONE	REV.	DESCRIPTION	DATE	APPROVED
	A	RELEASED FOR PRODUCTION		
	B	REVISE PER ECO	10/3/79	[illegible]

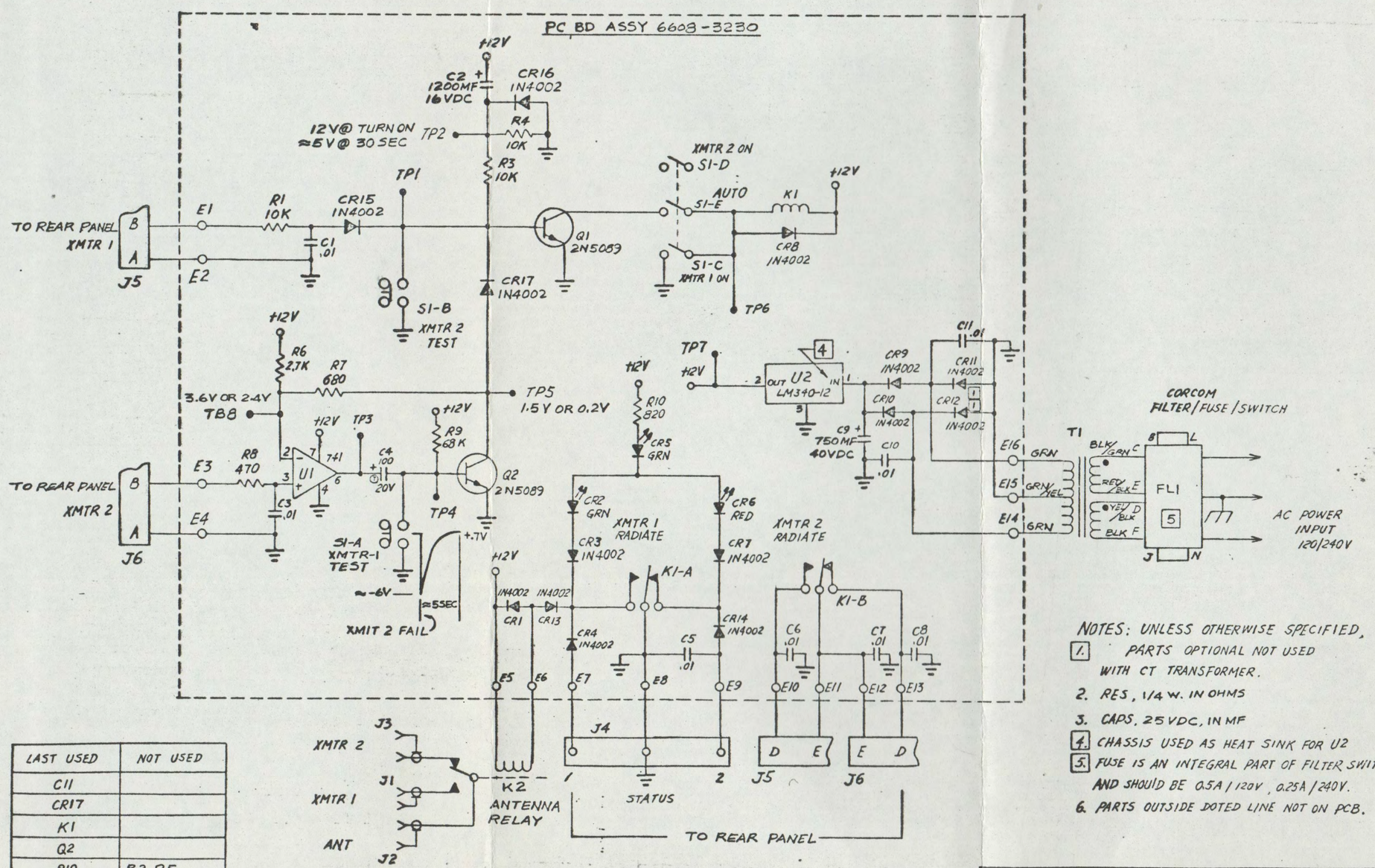

LAST USED	NOT USED
C11	
CR17	
K1	
Q2	
R10	R2, R5
S1	
U2	
E16	

NOTES: UNLESS OTHERWISE SPECIFIED,

1. PARTS OPTIONAL NOT USED WITH CT TRANSFORMER.
2. RES, 1/4 W. IN OHMS
3. CAPS, 25 VDC, IN MF
4. CHASSIS USED AS HEAT SINK FOR U2
5. FUSE IS AN INTEGRAL PART OF FILTER SWITCH AND SHOULD BE 0.5A / 120V, 0.25A / 240V.
6. PARTS OUTSIDE DOTED LINE NOT ON PCB.

CONTRACT NO.		
APPROVALS		DATE
DRAWN	Anna Chen	5-9-79
CHECKED	[illegible]	5-14-9
ISSUED	[illegible]	9/6/79
[illegible]	[illegible]	10/1/79

MEM TIME & FREQUENCY TECHNOLOGY INC.

TRANSMITTER MODEL 7770
TRANSFER SYSTEM FIG 6.12

SIZE	FSCM NO.	DWG. NO.	REV.
C		6601-3230	B
SCALE	NONE	SHEET 1 OF 1	

DWG. NO. 6601-3230 SH 1 REV. B

If You Didn't Get This From My Site,
Then It Was Stolen From...
www.SteamPoweredRadio.Com

BISHOP GRAPHICS/ACCUPRESS REORDER NO. A-4107

REVISIONS				
ZONE	REV.	DESCRIPTION	DATE	APPROVED
	A	RELEASED FOR PRODUCTION	6-19-79	[illegible]
	B	REVISED PER ECO 887	10/3/79	[illegible]

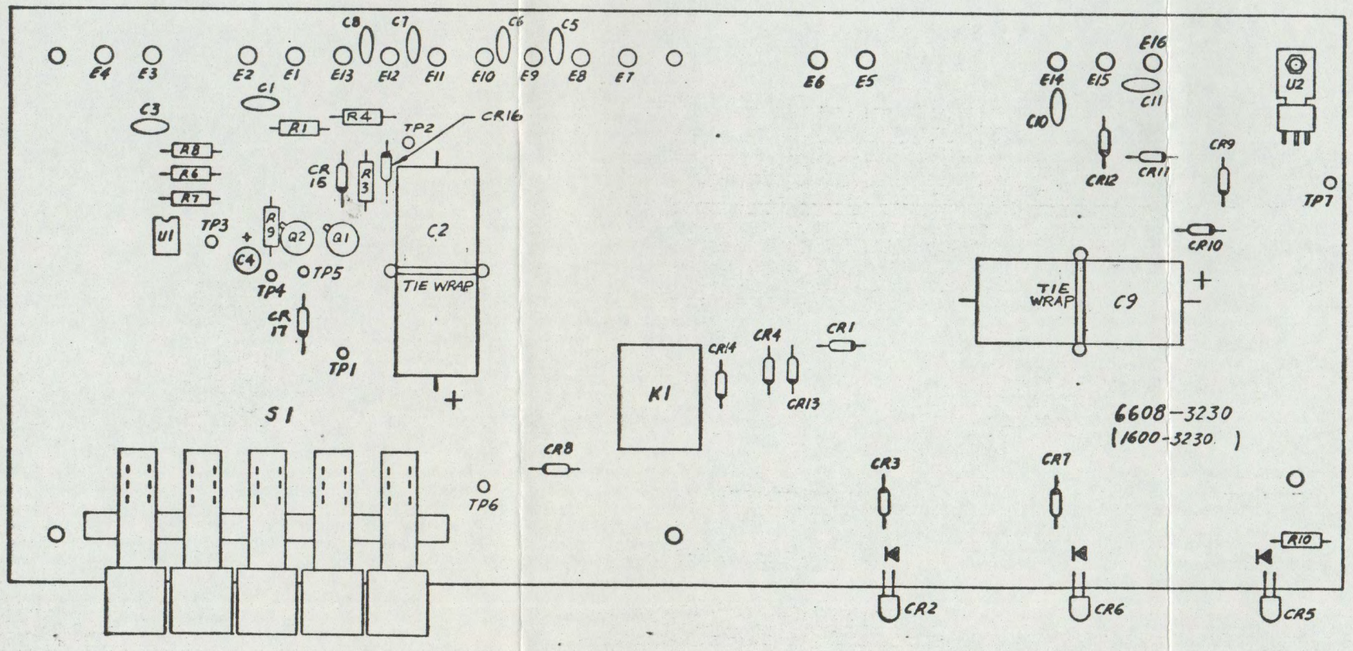

NOTE:
1. REF; SCHEMATIC 6601-3230

QTY REQD	CODE IDENT	PART OR IDENTIFYING NO.	NOMENCLATURE OR DESCRIPTION	MATERIAL SPECIFICATION

PARTS LIST

UNLESS OTHERWISE SPECIFIED DIMENSIONS ARE IN INCHES TOLERANCES ARE: FRACTIONS ± ~ DECIMALS .XX ± ~ .XXX ± ~ ANGLES ± ~

MATERIAL ~

FINISH ~

DO NOT SCALE DRAWING

CONTRACT NO.

APPROVALS	DATE
DRAWN Anna Chou	6-20-79
CHECKED KK	6-20-79
ISSUED PROJ ENGR G.J.	9/6/79
MFG ENGR QA [illegible]	10/3/79

MFM TIME & FREQUENCY TECHNOLOGY INC.

P C BD ASSY
MODEL 7770 TRANSMITTER
TRANSFER SYSTEM

SIZE C | FSCM NO. | DWG. NO. 6608-3230 | REV. B

SCALE 1:1 | SHEET 1 OF 1

NEXT ASSY	USED ON
5102-3276	7770

APPLICATION

DWG. NO. 6608-3230 | SH 1 | REV. B

www.SteamPoweredRadio.Com

BISHOP GRAPHICS/ACCUPRESS REORDER NO. A-4106

CKT REF	DESCRIPTION	QTY	TFT STOCK NO.
C1	Cap Cer Disc .01MFD	1	1005-1039
C2	Cap Elect 1200MFD 15V	1	1010-1201
C3	Cap Cer Disc .01MFD	1	1005-1039
C4	Cap Tan 100MFD 20V	1	1008-0102
C5	Cap Cer Disc .01MFD	1	1005-1039
C6	Cap Cer Disc .01MFD	1	1005-1039
C7	Cap Cer Disc .01MFD	1	1005-1039
C8	Cap Cer Disc .01MFD	1	1005-1039
C9	Cap Elect 750MFD 40V	1	1010-0751
C10	Cap Cer Disc .01MFD	1	1005-1039
C11	Cap Cer Disc .01MFD	1	1005-1039
CR1	DIO IN4002 Rect	1	1284-4002
CR2	LED Grn 5082-4950	1	1285-4950
CR3	DIO IN4002 Rect	1	1284-4002
CR4	DIO IN4002 Rect	1	1284-4002
CR5	LED Grn 5082-4950	1	1285-4950
CR6	LED Red 5082-4403	1	1285-4403
CR7	DIO IN4002 Rect	1	1284-4002
CR8	DIO IN4002 Rect	1	1284-4002
CR9	DIO IN4002 Rect	1	1284-4002
CR10	DIO IN4002 Rect	1	1284-4002
CR11	Not Used		
CR12	Not Used		
CR13	DIO IN4002 Rect	1	1284-4002
CR14	DIO IN4002 Rect	1	1284-4002
CR15	DIO IN4002 Rect	1	1284-4002
CR16	DIO IN4002 Rect	1	1284-4002
CR17	DIO IN4002 Rect	1	1284-4002
K1	Relay AZ531-09-1	1	1880-0010
Q1	Trans 2N5089	1	1271-5089
Q2	Trans 2N5089	1	1271-5089
R1	Res Car Comp 1/4W 5% 10K	1	1065-1002
R2	Not Used		
R3	Res Car Comp 1/4W 5% 10K	1	1065-1002
R4	Res Car Comp 1/4W 5% 10K	1	1065-1002
R5	Not Used		
R6	Res Car Comp 1/4W 5% 2.7K	1	1065-2701
R7	Res Car Comp 1/4W 5% 680	1	1065-0680
R8	Res Car Comp 1/4W 5% 470	1	1065-0470
R9	Res Car Comp 1/4W 5% 68K	1	1065-6802

www.SteamPoweredRadio.Com

CKT REF	DESCRIPTION	QTY	TFT STOCK NO.
R10	Res Car Comp 1/4W 5% 820	1	1065-0820
S1	Switch 2 Pos MOM 3 Pos Latch	1	1850-2005
U1	I/C LM741CN	1	1100-0741
U2	I/C LM340-12	1	1100-0340
	Tyton, Qwk Tie	2	2140-0004
	Socket I/C 8 Pin	1	2250-1008
	Socket Xistor 3 Pin	2	1150-0001
	Schematic	Ref	6601-3230
	P C Board	1	1600-3230

www.SteamPoweredRadio.Com

NEXT ASSY	USED ON
6608-1700	7703

REVISIONS

SYM	DESCRIPTION	DR	CHK	AUTH	DATE
A	REL TO PROD	MY		487	10-15-75
B	REV PER ECO 649	AC	JT	JD	4-11-79
C	REV PER ECO 944	MY	Eb	Eb	11/29/79

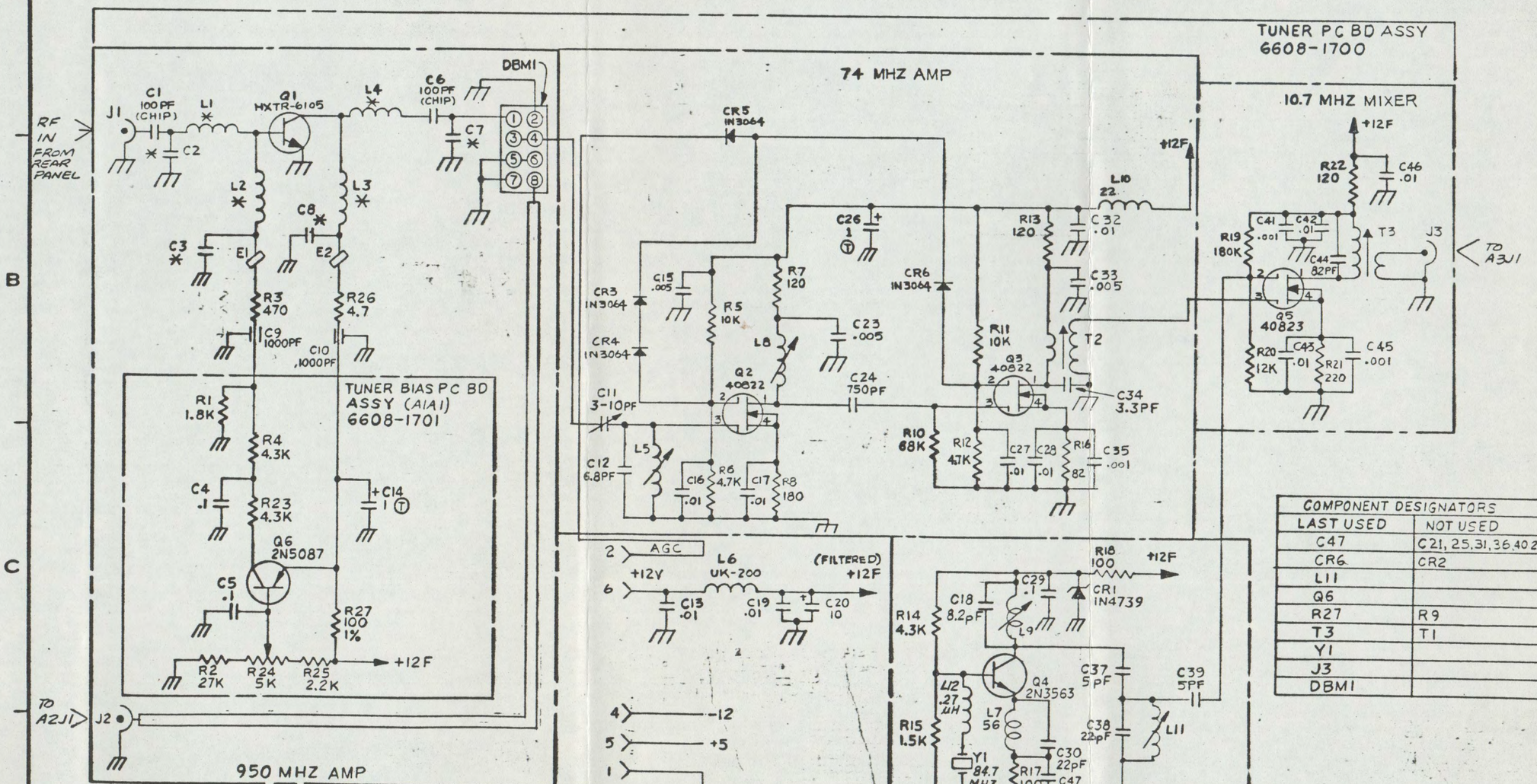

COMPONENT DESIGNATORS	
LAST USED	NOT USED
C47	C21, 25, 31, 36, 40, 22
CR6	CR2
L11	
Q6	
R27	R9
T3	T1
Y1	
J3	
DBM1	

NOTE:

1. * DENOTES COMPONENTS AS STRIPLINE ON P.C. BD.
2. (T) DENOTES TANTALUM CAPACITOR
3. RESISTOR VALUES IN OHMS 1/4W ±5%.
4. CAPACITOR VALUES ARE IN MICROFARADS
5. INDUCTOR VALUES ARE IN MICROHENRIES.

QTY PER ASSY	ITEM NO.	EN NO.	PART NO.	DESCRIPTION	REF DES

LIST OF MATERIALS

REMOVE ALL BURRS AND SHARP EDGES

TOLERANCES UNLESS OTHERWISE SPECIFIED .XX ± ~ .XXX ± ~ ANGULAR ± ~

DO NOT SCALE THIS PRINT

DRAWN BY / CHK BY / PROJ ENG / MFG ENG / APPD / APPD / ECO NO ~

DATE 10/1/75 / 10/20/75 / 11/29/75 / 11-3-78

TFT TIME & FREQUENCY TECHNOLOGY INC
3000 Olcott St., Santa Clara, California 95051
(408) 246-6365

TITLE SCHEMATIC TUNER (A1) FIG 6.13

SIZE C DRAWING NO 6601-2240 REV C

SCALE ~ SHT 1 OF 1

6601-2240

If You Didn't Get This From My Site,
Then It Was Stolen From...
www.SteamPoweredRadio.Com

BISHOP GRAPHICS/ACCUPRESS REORDER NO. A-8635

NEXT ASSY	USED ON
5102-2460	7701
5102-2460	7703

REVISIONS

SYM	DESCRIPTION	DR	CHK	AUTH	DATE
A	REL TO PROD	[illegible]		[illegible]	[illegible]
B	Revised per ECO 650	AC	[illegible]	M.B.	[illegible]
C	REV PER ECO 945	MY	[illegible]	[illegible]	[illegible]

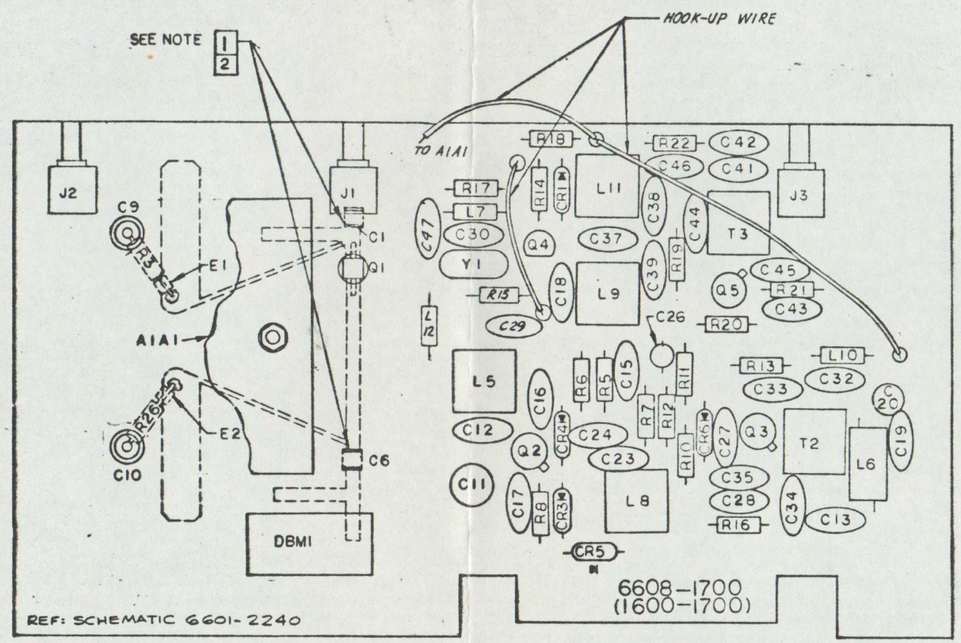

NOTES:

1. COMPONENTS C1, C6, C9, C10, E1, E2, Q1, R3, R26 ARE LOCATED ON CIRCUIT SIDE (FARSIDE) OF BOARD AS SHOWN.

2. BEFORE SOLDERING ORIENT CHIP CAPACITORS' TERMINATIONS ON STRIP LINE AS SHOWN, TYPICAL 2 PLACES.

QTY PER ASSY	ITEM NO.	BN NO.	PART NO.	DESCRIPTION	REF DES

LIST OF MATERIALS

REMOVE ALL BURRS AND SHARP EDGES

TOLERANCES UNLESS OTHERWISE SPECIFIED
.XX ± ~ ANGULAR ± ~
.XXX ± ~

DO NOT SCALE THIS PRINT

		DATE
DRAWN BY	[illegible]	[illegible]
CHK BY	[illegible]	11/20/[illegible]
PROJ. ENG	[illegible]	[illegible]
MFG. ENG		
APPD		
APPD		
ECO NO	~	

TFT TIME & FREQUENCY TECHNOLOGY INC
3000 Olcott St Santa Clara California 95050
(408) 246-6365

TITLE: A1 TUNER ASSY

SIZE D | DRAWING NO 6608-1700 | REV C

SCALE ~ | SHT 1 OF 1

6608-1700

www.SteamPoweredRadio.Com

BISHOP GRAPHICS/ACCUPRESS REORDER NO. A-1538

Model 7703 (A1) Tuner Assy Assembly #6608-1700
Rev C

CKT REF	DESCRIPTION	QTY	TFT STOCK NO.
C1	Cap Chip 100 PF	1	1009-0101
C2	Cap (Part of PC BD)		
C3	Cap (Part of PC BC)		
C6	Cap Chip 100 PF	1	1009-0101
C7	Cap (Part of PC BD)		
C8	Cap (Part of PC BD)		
C9	Cap 1000 PF (F-T)	1	1011-1001
C10	Cap 1000 PF (F-T)	1	1001-1001
C11	Cap Var 3-10 PF	1	1012-0310
C12	Cap Cer Disc 6.8 PF	1	1005-1052
C13	Cap Cer Disc .01 UF	1	1005-1039
C15	Cap Cer Disc .005 UF	1	1005-5049
C16	Cap Cer Disc .01 UF	1	1005-1039
C17	Cap Cer Disc .01 UF	1	1005-1039
C18	Cap Cer Disc 8.2 PF	1	1005-8201
C19	Cap Cer Disc .01 UF	1	1005-1039
C20	Cap Tan 10 UF 20V 10%	1	1008-0100
C22	Not Used		
C23	Cap Cer Disc .005 UF	1	1005-5049
C24	Cap Cer Disc 750 PF	1	1005-0751
C26	Cap Tan 1 UF 35V	1	1008-0011
C27	Cap Cer Disc .01 UF	1	1005-1039
C28	Cap Cer Disc .01 UF	1	1005-1039
C29	Cap Cer Disc .1 UF	1	1005-0100
C30	Cap Cer Disc 22 PF 5%	1	1005-0220
C32	Cap Cer Disc .01 UF	1	1005-1039
C33	Cap Cer Disc .005 UF	1	1005-5049
C34	Cap Cer Disc 3.3 PF	1	1005-0033
C35	Cap Cer Disc .001 UF	1	1005-1049
C37	Cap Cer Disc 5 PF	1	1005-0051
C38	Cap Cer Disc 22 PF 5%	1	1005-0220
C39	Cap Cer Disc 5 PF	1	1005-0051
C41	Cap Cer Disc .001 UF	1	1005-1049
C42	Cap Cer Disc .01 UF	1	1005-1039
C43	Cap Cer Disc .01 UF	1	1005-1039
C44	Cap Cer Disc 82 PF	1	1005-0082
C45	Cap Cer Disc .001 UF	1	1005-1049
C46	Cap Cer Disc .01 UF	1	1005-1039
C47	Cap Cer Disc .01UF	1	1005-1039
CR1	Diode IN4739 Zener	1	1283-4739
CR3	Diode IN3064	1	1281-3064
CR4	Diode IN3064	1	1281-3064
CR5	Diode IN3064	1	1281-3064
CR6	Diode IN3064	1	1281-3064

www.SteamPoweredRadio.Com

Model 7703 (A1) Tuner Assy Assembly #6608-1700
Rev C

CKT REF	DESCRIPTION	QTY	TFT STOCK NO.
DBM1	Mixer	1	4500-0003
E1	Ferrite Bead	1	1501-0654
E2	Ferrite Bead	1	1501-0654
J1	Conn RF RT Ang	1	2210-5153
J2	Conn RF RT Ang	1	2210-5153
J3	Conn RF RT Ang	1	2210-5153
L1	Inductor (Part of PC BD)		
L2	Inductor (Part of PC BD)		
L3	Inductor (Part of PC BD)		
L4	Inductor (Part of PC BD)		
L5	M/L Ind Var 4 1/4 T	1	1577-1010
L6	Choke RF 2 1/2 T	1	1530-0025
L7	Choke 56 UH	1	1531-0560
L8	M/L Ind Var 6 T	1	1577-1030
L9	M/L Ind Var 3 T	1	1577-1080
L10	Choke 22 UH	1	1531-0022
L11	M/L Ind Var 3 T	1	1577-1080
L12	Choke .27 UH	1	1531-0270
Q1	Trans HXTR-6105	1	1271-6105
Q2	Trans 40822 FET	1	1271-4082
Q3	Trans 40822 FET	1	1271-4082
Q4	Trans 2N3563	1	1271-3563
Q5	Trans 40823 FET	1	1271-4083
R3	Res Car Comp 470 1/4W ±5%	1	1065-0470
R5	Res Car Comp 10K 1/4W ±5%	1	1065-1002
R6	Res Car Comp 4.7K 1/4W ±5%	1	1065-4701
R7	Res Car Comp 120 1/4W ±5%	1	1065-0120
R8	Res Car Comp 180 1/4W ±5%	1	1065-0180
R10	Res Car Comp 68K 1/5W ±5%	1	1065-6802
R11	Res Car Comp 10K 1/4W ±5%	1	1065-1002
R12	Res Car Comp 4.7K 1/4W ±5%	1	1065-4701
R13	Res Car Comp 120 1/4W ±5%	1	1065-0120
R14	Res Car Comp 4.3K 1/4W ±5%	1	1065-4301
R15	Res Car Comp 1.5 1/4W ±5%	1	1065-1501
R16	Res Car Comp 82 1/4W ±5%	1	1065-0082
R17	Res Car Comp 100 1/4W ±5%	1	1065-0100
R18	Res Car Comp 100 1/4W ±5%	1	1065-0100
R19	Res Car Comp 180K 1/4W ±5%	1	1065-1803
R20	Res Car Comp 12K 1/4W ±5%	1	1065-1202
R21	Res Car Comp 220 1/4W ±5%	1	1065-0220

www.SteamPoweredRadio.Com

Model 7703 (A1) Tuner Assy Assembly #6608-1700
Rev C

CKT REF	DESCRIPTION	QTY	TFT STOCK NO.
R22	Res Car Comp 120 1/4W ±5%	1	1065-0120
R26	Res Car Comp 4.7 1/4W ±5%	1	1065-0004
T2	XMFR VAR	1	1577-1060
T3	XMFR VAR	1	1577-1070
Y1	Crystal 84.70000 MHz	1	2400-8470
	PC BD Tuner	1	1600-1700
A1A1	Tuner Bias Assembly	1	6608-1701
	Wire, Hook-Up 22 GA RD	4"	4700-0002
ASCH	Schematic		6601-2240
ATPR	Test Procedure		5104-0001
ATDS	Test Data Sheet		5108-0001

www.SteamPoweredRadio.Com

NEXT ASSY	USED ON
6608-1700	1703

REVISIONS

SYM	DESCRIPTION	DR	CHK	AUTH	DATE
A	REL TO PROD	KK	[illegible]	[illegible]	2/5/77
B	REVISED PER ECO 731	AC	[illegible]	M.B.	6/23/77

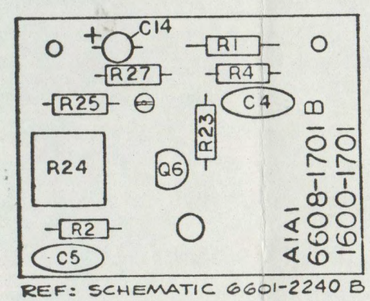

REF: SCHEMATIC 6601-2240 B

ITEM NO.	EN NO	PART NO.	DESCRIPTION	REF DES
QTY PER ASSY			LIST OF MATERIALS	

REMOVE ALL BURRS AND SHARP EDGES

TOLERANCES UNLESS OTHERWISE SPECIFIED
.XX ±
.XXX ±
ANGULAR ±

DO NOT SCALE THIS PRINT

		DATE
DRAWN BY	CL	2/4/79
CHK BY	[illegible]	2/6/79
PROJ. ENG	[illegible]	2/6/79
MFG ENG		
APPD		
APPD		
ECO NO		

TFT TIME & FREQUENCY TECHNOLOGY INC
3000 Olcott St., Santa Clara, California 95051
(408) 246-6365

TITLE
AIAI
TUNER BIAS

SIZE C | DRAWING NO 6608-1701 | REV B

SCALE 2:1 | SHT 1 OF 1

DWG NO. 6608-1701

www.SteamPoweredRadio.Com

BISHOP GRAPHICS/ACCUPRESS
REORDER NO. A-8835

Model 7703 Tuner Bias Assy A1A1 Assembly #6608-1701
Rev B

CKT REF	DESCRIPTION	QTY	TFT STOCK NO.
C4	Cap Cer Disc .1 UF	1	1005-0100
C5	Cap Cer Disc .1 UF	1	1005-0100
C14	Cap Tan 1 UF 35V	1	1008-0011
Q6	Trans 2N5087	1	1271-5087
R1	Res Car Comp 1.8K 1/4W ± 5%	1	1065-1801
R2	Res Car Comp 27K 1/4W ± 5%	1	1065-2702
R4	Res Car Comp 4.3K 1/4W ± 5%	1	1065-4301
R23	Res Car Comp 4.3K 1/4W ± 5%	1	1065-4301
R24	Res Var PC MT 5K 1T	1	1072-5001
R25	Res Car Comp 2.2K 1/4W ± 5%	1	1065-2201
R27	Res Mt Flm 100 1/8W ± 1%	1	1061-0100
	PC BD Tuner Bias	1	1600-1701
ASCH	Schematic		6601-2240
ATPR	Test Procedure		5104-0076
ATDS	Test Data Sheet		5108-0076

www.SteamPoweredRadio.Com

NOTE: UNLESS OTHERWISE SPECIFIED;

1. RESISTOR VALUES ARE IN OHMS, 1/4W ± 5%.
2. CAPACITOR VALUES ARE IN MICROFARADS.
3. INDUCTOR VALUES ARE IN MICROHENRIES.
4. ALL FIXED CAPACITORS 5% NPO CERAMIC DISCS UNLESS SPECIFIED.
5. * DENOTES .001 MFD CERAMIC DISC CAPACITOR WHICH MAY BE SUBSITUTED FOR NOMINAL VALUE SHOWN.
6. Ⓣ DENOTES TANTALUM CAPACITOR.
7. R14 USED ONLY IN SYSTEMS B & D

NEXT ASSY	USED ON
5102-2450	7703
5102-2430	7701

REVISIONS

SYM	DESCRIPTION	DR	CHK	AUTH	DATE
A		DH	[illegible]	481	[illegible]
B	REVISED PER ECO	KK	MB		[illegible]
C	REVISED PER ECO 643	AC	[illegible]	M.B.	[illegible]

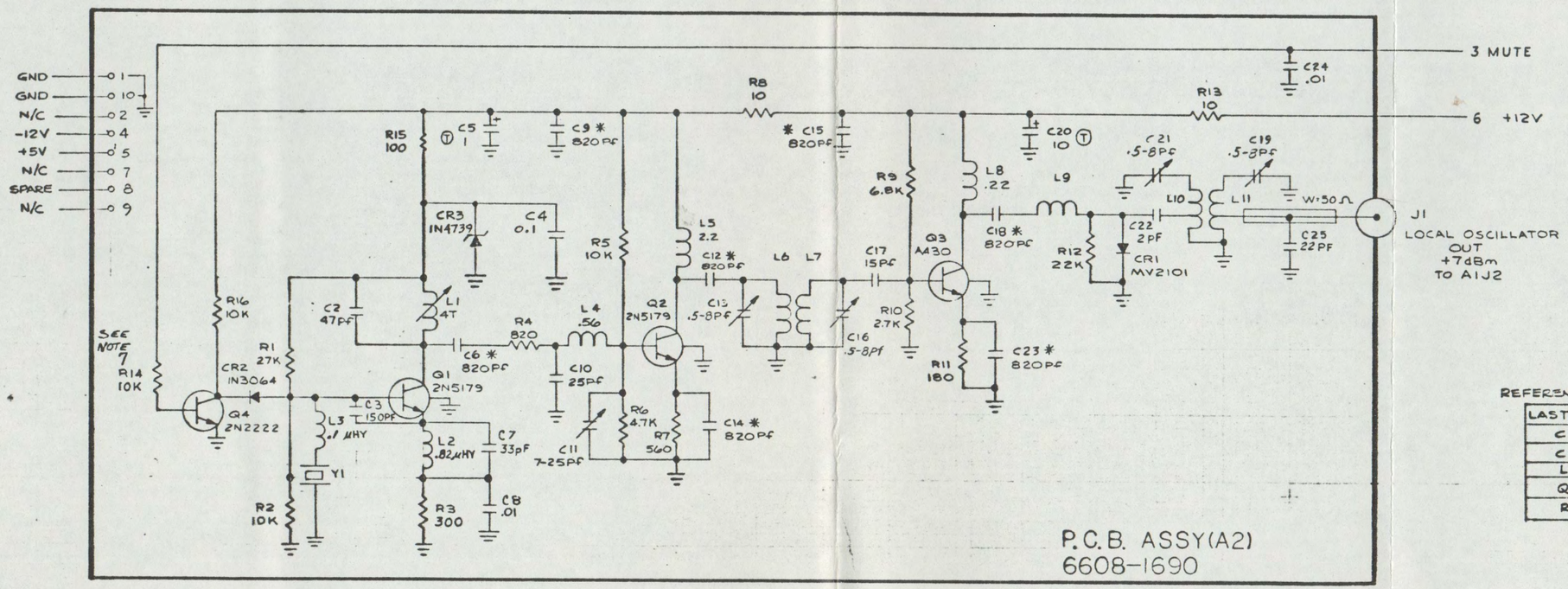

REFERENCE DESIGNATORS

LAST USED	NOT USED
C25	C1
CR3	
L11	
Q4	
R16	

F_0 =		Y1 =		L O FREQ =
947	MHz	54.56250	MHz	873.0 MHz
947.5		54.59375		873.5
948		54.62500		874.0
948.5		54.65625		874.5
949		54.68750		875.0
949.5		54.71875		875.5
950		54.75000		876.0
950.5		54.78125		876.5
951		54.81250		877.0
951.5	MHz	54.84375	MHz	877.5 MHz

FIG 6-14

QTY PER ASSY	ITEM NO.	EN NO.	PART NO.	DESCRIPTION	REF DES

LIST OF MATERIALS

REMOVE ALL BURRS AND SHARP EDGES

TOLERANCES UNLESS OTHERWISE SPECIFIED .XX ± .XXX ± ANGULAR ±

DO NOT SCALE THIS PRINT

DRAWN BY T. DIAZ — DATE [illegible]
CHK BY [illegible] — [illegible]
PROJ ENG [illegible]
MFG ENG [illegible] — 11-3-78
APPD [illegible]
APPD
ECO NO

TFT TIME & FREQUENCY TECHNOLOGY INC
3000 Olcott St Santa Clara California 95050
(408) 246-6365

TITLE LOCAL OSCILLATOR STL RECEIVER A2

SIZE D — DRAWING NO 6601-2190 — REV C
SCALE — — SHT 1 OF 1

If You Didn't Get This From My Site,
Then It Was Stolen From...
www.SteamPoweredRadio.Com

NEXT ASSY	USED ON
5102-2430	7701
5102-2450	7703

REVISIONS

SYM	DESCRIPTION	DR	CHK	AUTH	DATE
A	REL TO PROD			487	
B	REVISED PER ECO	KK		644	5/4/7[illegible]
C	REVISED PER ECO	KK		753	[illegible]
D	REV PER ECO 936	MY	[illegible]	[illegible]	1/5/79

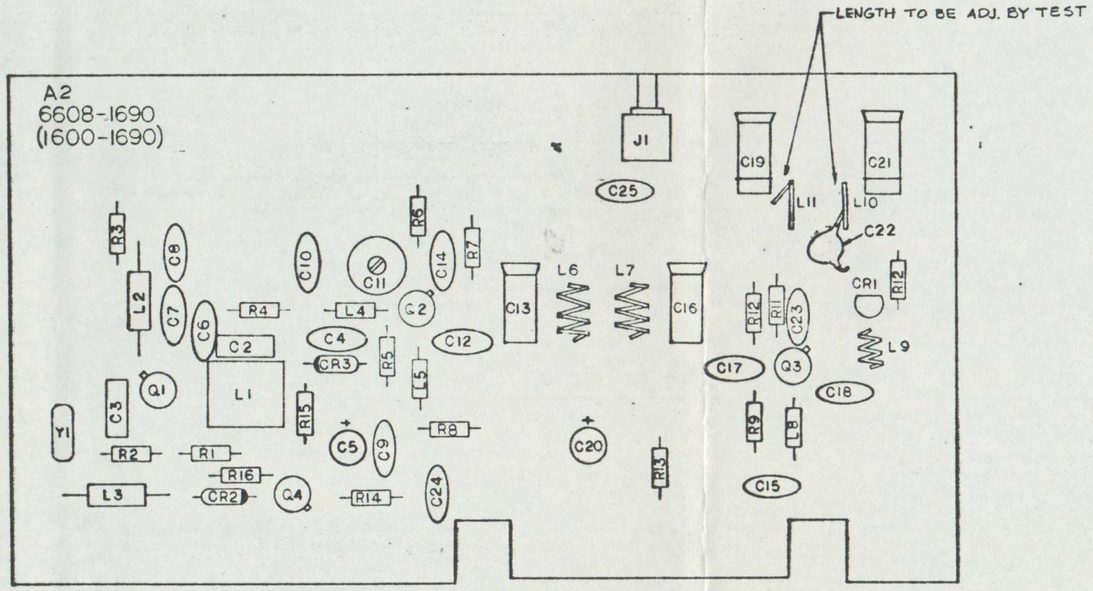

REF: SCHEMATIC 6601-2190

QTY PER ASSY	ITEM NO.	EN NO.	PART NO.	DESCRIPTION	REF DES

LIST OF MATERIALS

REMOVE ALL BURRS AND SHARP EDGES

TOLERANCES UNLESS OTHERWISE SPECIFIED
.XX ± ~ ANGULAR
.XXX ± ~ ± ~

DO NOT SCALE THIS PRINT

DRAWN BY [illegible] DATE [illegible]
CHK BY [illegible] 11/6/79
PROJ ENG [illegible]
MFG ENG [illegible]
APPD [illegible]
APPD
ECO NO

TFT TIME & FREQUENCY TECHNOLOGY INC
3000 Olcott St. Santa Clara California 95050
(408) 246-6365

TITLE A2 LOCAL OSC ASSY

SIZE D DRAWING NO 6608-1690 REV D
SCALE ~ SHT 1 OF [illegible]

6608-1690

www.SteamPoweredRadio.Com

BISHOP GRAPHICS/ACCUPRESS REORDER NO. A-1538

Model 7703 (A2) 1st Local Oscillator Assembly #6608-1690
Rev D

CKT REF	DESCRIPTION	QTY	TFT STOCK NO.
C2	Cap Cer Disc 47PF	1	1005-0470
C3	Cap Cer Disc 150PF	1	1005-0151
C4	Cap Cer Disc 0.1UF	1	1005-0100
C5	Cap Tan 1UF 35V	1	1008-0011
C6	Cap Cer Disc 820PF	1	1005-0821
C7	Cap Cer Disc 33PF	1	1005-0330
C8	Cap Cer Disc .01UF	1	1005-1039
C9	Cap Cer Disc 820PF	1	1005-0821
C10	Cap Cer Disc 25PF	1	1005-0250
C11	Cap Var 7-25PF	1	1012-0725
C12	Cap Cer Disc 820PF	1	1005-0821
C13	Cap Var .5-8PF	1	1012-0058
C14	Cap Cer Disc 820PF	1	1005-0821
C15	Cap Cer Disc 820PF	1	1005-0821
C16	Cap Var .5-8PF	1	1012-0110
C17	Cap Cer Disc 15PF	1	1005-0150
C18	Cap Cer Disc 820PF	1	1005-0821
C19	Cap Var .5-8PF	1	1012-0058
C20	Cap Tan 10UF 20V	1	1008-0100
C21	Cap Var .5-8PF	1	1012-0058
C22	Cap Cer Disc 2PF	1	1005-0020
C23	Cap Cer Disc 820PF	1	1005-0821
C24	Cap Cer Disc .01UF	1	1005-1039
C25	Cap Cer Disc 22PF	1	1005-0220
CR1	Varicap MV2101	1	1290-2101
CR2	Diode IN3064	1	1281-3064
CR3	Diode IN4739	1	1283-4739
J1	Conn RF RT Ang	1	2210-5153
L1	Ind Var I/H 4T	1	1550-0010
L2	Inductor RF .82UH	1	1531-0820
L3	Choke RF .1UH	1	1531-0039
L4	Choke RF .56UH	1	1531-0056
L5	Choke RF 2.2UH	1	1531-0021
L6	Inductor 3T	1	1540-0001
L7	Inductor 3T	1	1540-0001
L8	Choke .22UH	1	1531-0020
L9	Inductor 3T	1	1540-0002
L10	Inductor .80LG	1	1540-0003
L11	Inductor .80LG	1	1540-0003

www.SteamPoweredRadio.Com

CKT REF	DESCRIPTION	QTY	TFT STOCK NO.
Q1	Trans 2N5179	1	1271-5179
Q2	Trans 2N5179	1	1271-5179
Q3	Trans A430	1	1271-0430
Q4	Trans 2N2222	1	1271-2222
R1	Res Car Comp 27K 1//4W+5%	1	1065-2702
R2	Res Car Comp 10K 1/4W+5%	1	1065-1002
R3	Res Car Comp 300 1/4W+5%	1	1065-0300
R4	Res Car Comp 820 1/4W+5%	1	1065-0820
R5	Res Car Comp 10K 1/4W+5%	1	1065-1002
R6	Res Car Comp 4.7K 1/4W+5%	1	1065-4701
R7	Res Car Comp 560 1/4W+5%	1	1065-0560
R8	Res Car Comp 10 1/4W+5%	1	1065-0010
R9	Res Car Comp 6.8K 1/4W+5%	1	1065-6801
R10	Res Car Comp 2.7K 1/4W+5%	1	1065-2701
R11	Res Car Comp 180 1/4W+5%	1	1065-0180
R12	Res Car Comp 22K 1/4W+5%	1	1065-2202
R13	Res Car Comp 10 1/4W+5%	1	1065-0010
R14	Res Car Comp 10K 1/4W+5%	1	1065-1002
R15	Res Car Comp 100 1/4W+5%	1	1065-0100
R16	Res Car Comp 10K 1/4W+5%	1	1065-1002
Y1	Crystal* 54.56250MHz	1	2400-5456
	54.59375MHz		2400-5459
	54.62500MHz		2400-5465
	54.65625MHz		2400-5466
	54.68750MHz		2400-5468
	54.71875MHz		2400-5471
	54.75000MHz		2400-5475
	54.78125MHz		2400-5478
	54.81250MHz		2400-5481
	54.84375MHz		2400-5484
	P.C. Board 1st L.O.	1	1600-1690
	Jack, Solder Mount	2	2140-0007
	*Denotes Factory Select Value		
ASCH	Schematic		6601-2190
ATPR	Test Procedure		5104-0107
ATDS	Test Data Sheet		5108-000

www.SteamPoweredRadio.Com

NEXT ASSY	USED ON
6608-1750	7703

REVISIONS

SYM	DESCRIPTION	DR	CHK	AUTH	DATE
A	REL. FOR PRODUCTION				
B	REV PER ECO	RK		555	1/26/79
C	REV PER ECO	AC	M.D.	651	4/27/79

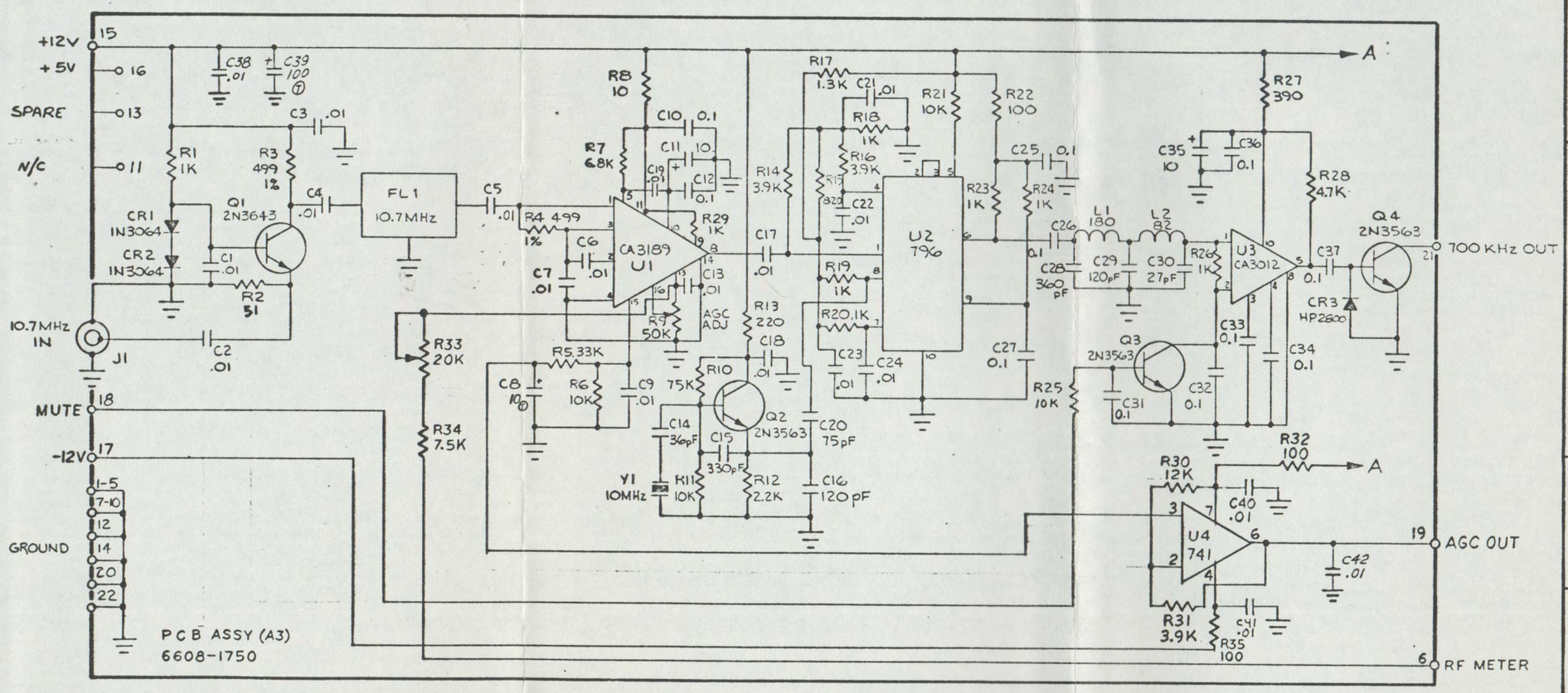

COMPONENT DESIGNATORS		
FIRST USED	LAST USED	NOT USED
C1	C42	
CR1	CR3	
L1	L2	
FL1	FL1	
Q1	Q4	
R1	R35	
U1	U4	
Y1	Y1	

3. INDUCTOR VALUES ARE IN MICROHENRIES
2. CAPACITOR VALUES ARE IN MICROFARADS
1. RESISTOR VALUES ARE OHMS, 1/4W, 5%
NOTES, UNLESS OTHERWISE SPECIFIED;

QTY PER ASSY	ITEM NO.	EN NO	PART NO.	DESCRIPTION	REF DES

LIST OF MATERIALS

REMOVE ALL BURRS AND SHARP EDGES

TOLERANCES UNLESS OTHERWISE SPECIFIED .XX ± ~ .XXX ± ~ ANGULAR ± ~

DO NOT SCALE THIS PRINT

		DATE
DRAWN BY		8/29
CHK BY		9/11/78
PROJ ENG.		11/1/78
MFG ENG		11/1/78
APPD.		
APPD.		
ECO NO		

TFT TIME & FREQUENCY TECHNOLOGY INC
3000 Olcott St., Santa Clara, California 95051
(408) 246-6365

TITLE SCHEMATIC 10.7 MHz I.F. A3 COMPOSITE, FIG 6.15

SIZE C | DRAWING NO 6601-2210 | REV C

SCALE ~ | SHT 1 OF 1

DWG. NO. 6601-2210

If You Didn't Get This From My Site,
Then It Was Stolen From...
www.SteamPoweredRadio.Com

BISHOP GRAPHICS/ACCUPRESS
REORDER NO. A-8835

NEXT ASSY	USED ON
5102-3060	7703

REVISIONS

SYM	DESCRIPTION	DR	CHK	AUTH	DATE
A	REL TO PROD	[illegible]		487	
B	Revised per ECO 652	[illegible]	[illegible]	M.B.	[illegible]
C	REV PER ECO 937	MY	[illegible]	[illegible]	[illegible]

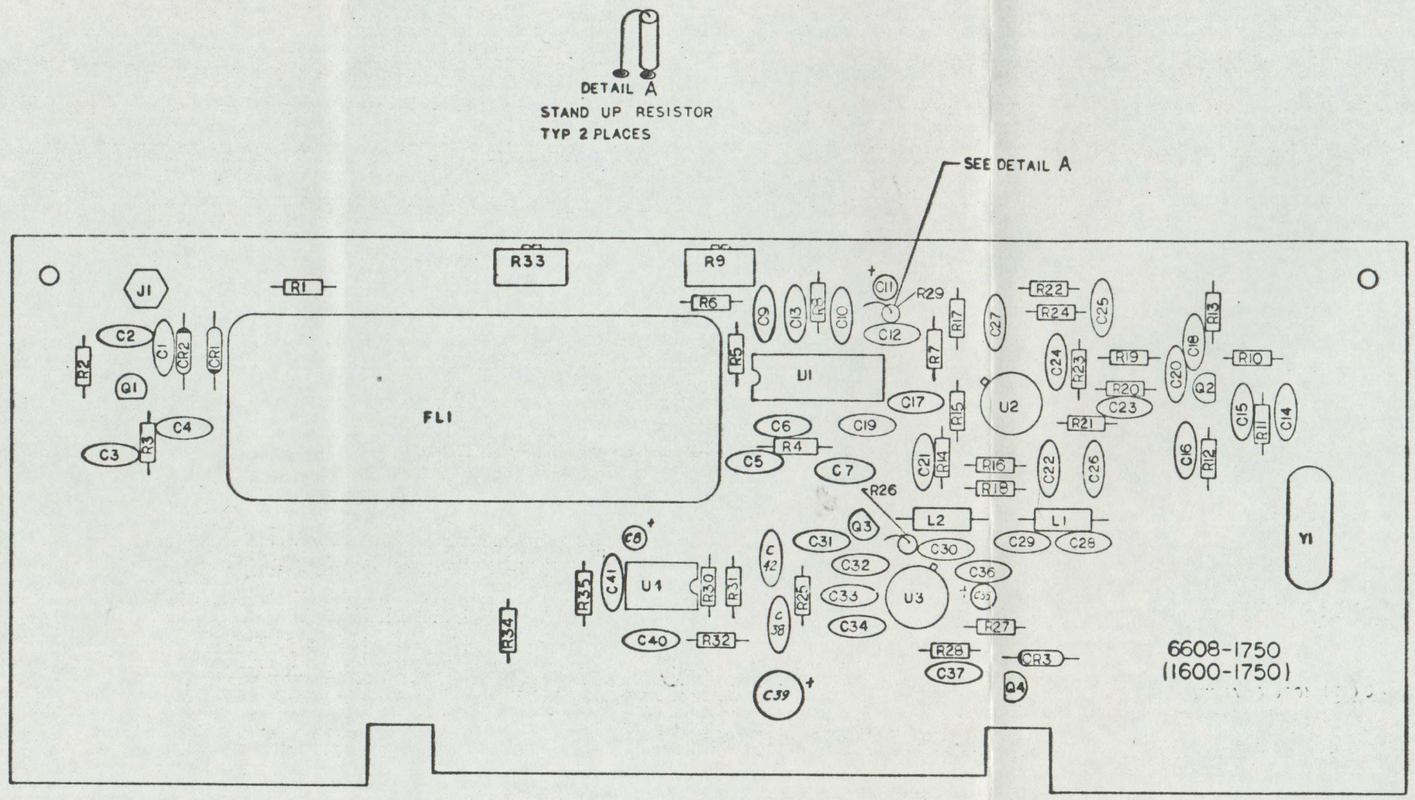

REF: SCHEMATIC 6601-2210

QTY PER ASSY	ITEM NO.	EN NO.	PART NO.	DESCRIPTION	REF DES

LIST OF MATERIALS

REMOVE ALL BURRS AND SHARP EDGES

TOLERANCES UNLESS OTHERWISE SPECIFIED
.XX ± ~ ANGULAR
.XXX ± ~ ± ~

DO NOT SCALE THIS PRINT

		DATE
DRAWN BY	L. KEYES	11/1/78
CHK BY	[illegible]	11/10/78
PROJ ENG	[illegible]	11/6/78
MFG ENG	[illegible]	11-79
APPD		
APPD		
ECO NO		

T.E.T. TIME & FREQUENCY TECHNOLOGY INC
3000 Olcott St. Santa Clara California 95050
(408) 246-6365

TITLE A3 10.7 IF ASSY MODEL 7703

SIZE D DRAWING NO 6608-1750 REV C

SCALE ~ SHT 1 OF

www.SteamPoweredRadio.Com

BISHOP GRAPHICS/ACCUPRESS REORDER NO. A-1538

Model 7703 (A3) 10.7 MHz IF PCB Assembly #6608-1750 Rev C

CKT REF	DESCRIPTION	QTY	TFT STOCK NO.
C1	Cap Cer Disc .01UF	1	1005-1039
C2	Cap Cer Disc .01UF	1	1005-1039
C3	Cap Cer Disc .01UF	1	1005-1039
C4	Cap Cer Disc .01UF	1	1005-1039
C5	Cap Cer Disc .01UF	1	1005-1039
C6	Cap Cer Disc .01UF	1	1005-1039
C7	Cap Cer Disc .01UF	1	1005-1039
C8	Cap Tan 10UF 35 VDC	1	1008-0011
C9	Cap Cer Disc .01UF	1	1005-1039
C10	Cap Cer Disc 0.1UF 12V	1	1005-0100
C11	Cap Tan 10UF 20V	1	1008-0100
C12	Cap Cer Disc 0.1UF 12V	1	1005-0100
C13	Cap Cer Disc .01UF	1	1005-1039
C14	Cap Mica 36PF	1	1001-0360
C15	Cap Mica 330PF	1	1001-0331
C16	Cap Cer Disc 120PF	1	1005-0121
C17	Cap Cer Disc .01UF	1	1005-1039
C18	Cap Cer Disc .01UF	1	1005-1039
C19	Cap Cer Disc .01UF	1	1005-1039
C20	Cap Mica 75PF	1	1001-0750
C21	Cap Cer Disc .01UF	1	1005-1039
C22	Cap Cer Disc .01UF	1	1005-1039
C23	Cap Cer Disc .01UF	1	1005-1039
C24	Cap Cer Disc .01UF	1	1005-1039
C25	Cap Cer Disc 0.1UF 12V	1	1005-0100
C26	Cap Cer Disc 0.1UF 12V	1	1005-0100
C27	Cap Cer Disc 0.1UF 12V	1	1005-0100
C28	Cap Mica 360PF	1	1001-0361
C29	Cap Mica 120PF	1	1001-0121
C30	Cap Mica 27PF	1	1001-0270
C31	Cap Cer Disc 0.1UF 12V	1	1005-0100
C32	Cap Cer Disc 0.1UF 12V	1	1005-0100
C33	Cap Cer Disc 0.1UF 12V	1	1005-0100
C34	Cap Cer Disc 0.1UF 12V	1	1005-0100
C35	Cap Tant 10UF 20V 10%	1	1008-0100
C36	Cap Cer Disc 0.1UF 12V	1	1005-0100
C37	Cap Cer Disc 0.1UF 12V	1	1005-0100
C38	Cap Cer Disc .01UF	1	1005-1039
C39	Cap Tan 100UF 20V 20%	1	1008-0102
C40	Cap Cer Disc .01UF	1	1005-1039
C41	Cap Cer Disc .01UF	1	1005-1039
C42	Cap Cer Disc .01UF	1	1005-1039

www.SteamPoweredRadio.Com

Model 7703 (A3) 10.7MHz IF PCB Assembly #6608-1750
Rev C

CKT REF	DESCRIPTION	QTY	TFT STOCK NO.
CR1	Diode IN3064	1	1281-3064
CR2	Diode IN3064	1	1281-3064
CR3	Diode HP2800	1	1282-2800
FL1	Filter Band Pass 10.7MHz	1	1052-0006
L1	Choke RF 180UH	1	1530-0180
L2	Choke RF 82UH	1	1530-0820
Q1	Trans 2N3643	1	1271-3643
Q2	Trans 2N3563	1	1271-3563
Q3	Trans 2N3563	1	1271-3563
Q4	Trans 2N3563	1	1271-3563
R1	Res Car Comp 1K 1/4W ±5%	1	1065-1001
R2	Res Car Comp 51 1/4W ±5%	1	1065-0051
R3	Res Mt Flm 499 1/8W ±1%	1	1061-0499
R4	Res Mt Flm 499 1/8W ±1%	1	1061-0499
R5	Res Car Comp 33K 1/4W ±5%	1	1065-3302
R6	Res Car Comp 10K 1/4W ±5%	1	1065-1002
R7	Res Car Comp 6.8K 1/4W ±5%	1	1065-6801
R8	Res Car Comp 10 1/4W ±5%	1	1065-0010
R9	Res Var 50K 1T	1	1072-5002
R10	Res Car Comp 75K 1/4W ±5%	1	1065-7502
R11	Res Car Comp 10K 1/4W ±5%	1	1065-1002
R12	Res Car Comp 2.2K 1/4W ±5%	1	1065-2201
R13	Res Car Comp 220 1/4W ±5%	1	1065-0220
R14	Res Car Comp 3.9K 1/4W ±5%	1	1065-3901
R15	Res Car Comp 820 1/4W ±5%	1	1065-0820
R16	Res Car Comp 3.9K 1/4W ±5%	1	1065-3901
R17	Res Car Comp 1.3K 1/4W ±5%	1	1065-1301
R18	Res Car Comp 1K 1/4W ±5%	1	1065-1001
R19	Res Car Comp 1K 1/4W ±5%	1	1065-1001
R20	Res Car Comp 1K 1/4W ±5%	1	1065-1001
R21	Res Car Comp 10K 1/4W ±5%	1	1065-1002
R22	Res Car Comp 100 1/4W ±5%	1	1065-0100
R23	Res Car Comp 1K 1/4W ±5%	1	1065-1001
R24	Res Car Comp 1K 1/4W ±5%	1	1065-1001
R25	Res Car Comp 10K 1/4W ±5%	1	1065-1002
R26	Res Car Comp 1K 1/4W ±5%	1	1065-1001
R27	Res Car Comp 390 1/4W ±5%	1	1065-0390
R28	Res Car Comp 4.7K 1/4W ±5%	1	1065-4701
R29	Res Car Comp 1K 1/4W ±5%	1	1065-1001
R30	Res Car Comp 12K 1/4W ±5%	1	1065-1202

www.SteamPoweredRadio.Com

Model 7703 (A3) 10.7MHz IF PCB Assembly #6608-1750
Rev C

CKT REF	DESCRIPTION	QTY	TFT STOCK NO.
R31	Res Car Comp 3.9K 1/4W ±5%	1	1065-3901
R32	Res Car Comp 100 1/4W ±5%	1	1065-0100
R33	Res Var PC Mt 20K 1T	1	1072-2002
R34	Res Car Comp 7.5K 1/4W ±5%	1	1065-7501
R35	Res Car Comp 100 1/4W ±5%	1	1065-0100
U1	Int Ckt CA3189E	1	1100-3189
U2	Int Ckt 796	1	1100-0796
U3	Int Ckt CA3012	1	1100-3012
U4	I/C LM741CN	1	1100-0741
Y1	Crystal 10 MHz	1	2400-1002
J1	Conn Recept PC Mt 50 ohm	1	2200-0004
	PC BD 10.7MHz IF	1	1600-1750
	PC BD Extractor	2	1650-6100
	Nut 6-32	3	2111-0011
	Socket I/C 8 Pin	1	2250-1008
ASCH	Schematic		6601-2210
ATPR	Test Procedure		5104-0003
ATDS	Test Data Sheet		5108-0003

www.SteamPoweredRadio.Com

NEXT ASSY	USED ON
6608-1760	7703

REVISIONS					
SYM	DESCRIPTION	DR	CHK	AUTH	DATE
A	[illegible]			487	
B	REV PER ECO			555	[illegible]
C	REV PER ECO	AS	MR	675	[illegible]
D	REV PER ECO 938	MY	CK	[illegible]	[illegible]

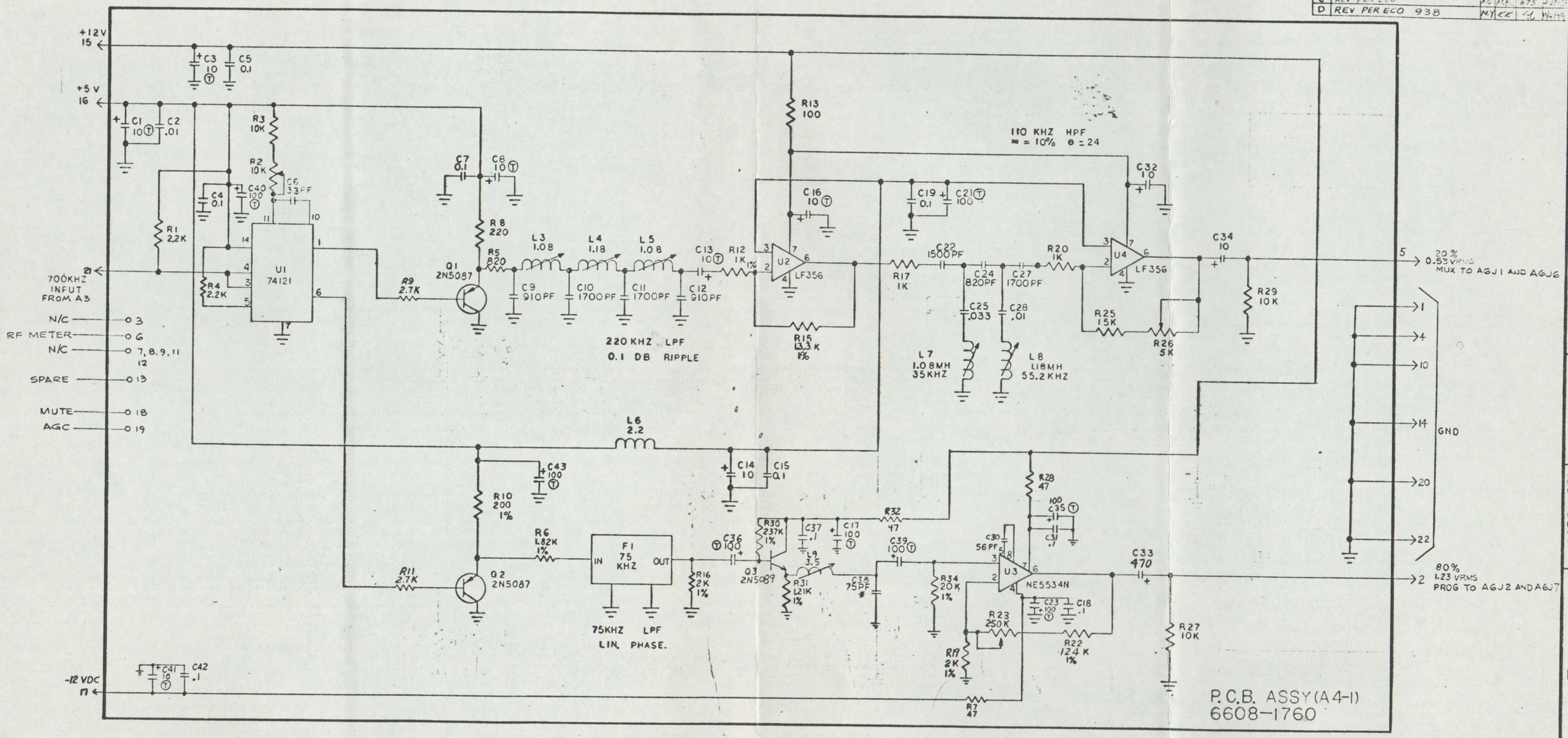

LAST USED	NOT USED
C43	C26, C29, C20
F1	
L9	L1, L2
Q3	
R34	R9, R11, R14, R18, R24, R33
U4	

NOTES: UNLESS OTHERWISE SPECIFIED.

1. RESISTOR VALUES ARE IN OHMS, 1/4W, 5%.
2. CAPACITOR VALUES ARE IN MICROFARADS.
3. INDUCTOR VALUES ARE IN MILLIHENRIES.
4. * FACTORY SELECT VALUE TYPICAL VALUE SHOWN.
5. Ⓣ DENOTES TANTALUM CAPACITOR

FIG 6-16

QTY PER ASSY	ITEM NO	EN NO	PART NO	DESCRIPTION	REF DES

LIST OF MATERIALS

REMOVE ALL BURRS AND SHARP EDGES

TOLERANCES UNLESS OTHERWISE SPECIFIED
.XX ± ANGULAR ±
.XXX ±

DO NOT SCALE THIS PRINT

		DATE
DRAWN BY	[illegible]	
CHK BY	[illegible]	
PROJ ENG	[illegible]	
MFG ENG	[illegible]	
APPD		
APPD		
ECO NO		

T.F.T. TIME & FREQUENCY TECHNOLOGY INC
3000 Olcott St Santa Clara California 95050
(408) 246-6365

TITLE BASEBAND - MUX A4-1 PROCESSING, STL RECEIVER STEREO

SIZE D | DRAWING NO 6601-2200 | REV D

SCALE | SHT 1 OF 1

If You Didn't Get This From My Site,
Then It Was Stolen From...
www.SteamPoweredRadio.Com

SHOP GRAPHICS/ACCUPRESS
BORDER NO. A-1538

NEXT ASSY	USED ON
5102-3060	7703

REVISIONS

SYM	DESCRIPTION	DR	CHK	AUTH	DATE
A	REL TO PROD	[illegible]		487	[illegible]
B	Revised per ECO 776	AC	M.B.	[illegible]	[illegible]
C	REV/ECO 803	UT	M.B.	[illegible]	9-24-73
D	REV PER ECO 932	MY	KK	[illegible]	11/8/74

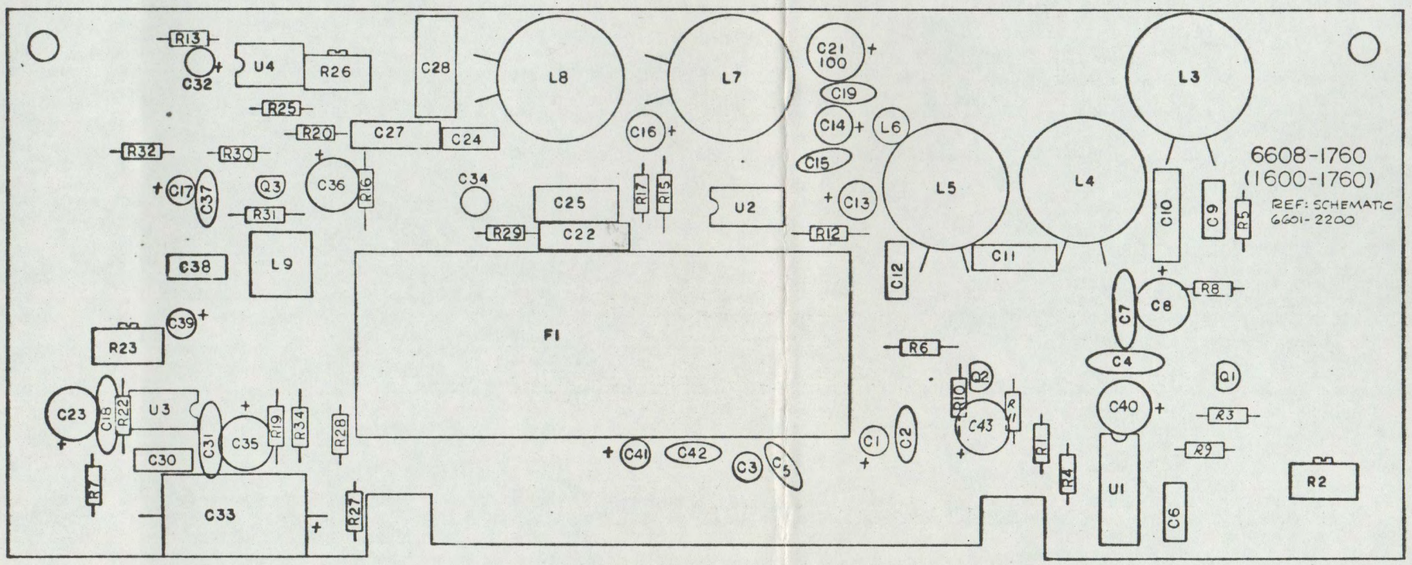

DWG NO 6608-1760

QTY PER ASSY	ITEM NO	BM NO	PART NO.	DESCRIPTION	REF DES

LIST OF MATERIALS

REMOVE ALL BURRS AND SHARP EDGES

TOLERANCES UNLESS OTHERWISE SPECIFIED
.XX ± ~ ANGULAR ± ~
.XXX ± ~

DO NOT SCALE THIS PRINT

		DATE
DRAWN BY	L. REYES	11-17-71
CHK BY	[illegible]	11-17-71
PROJ ENG	[illegible]	11/17/71
MFG ENG	[illegible]	11-17-71
APPD	[illegible]	
APPD		
ECO NO	~	

TFT TIME & FREQUENCY TECHNOLOGY INC
3000 Olcott St Santa Clara California 95050
(408) 246-6365

TITLE A4-1 COMP BASEBD ASSY

SIZE D DRAWING NO 6608-1760 REV D

SCALE ~ SHT 1 OF 1

www.SteamPoweredRadio.Com

TOP GRAPHICS/ACCUPRESS REORDER NO. A-1538

CKT REF	DESCRIPTION	QTY	TFT STOCK NO.
C1	Cap Tan 10 UF 20V 10%	1	1008-0100
C2	Cap Cer Disc .01 UF	1	1005-1039
C3	Cap Tan 10 UF 20V 10%	1	1008-0100
C4	Cap Cer Disc 0.1 UF 12V	1	1005-0100
C5	Cap Cer Disc 0.1 UF 12V	1	1005-0100
C6	Cap Mica 33 PF	1	1001-0330
C7	Cap Cer Disc 0.1 UF 12V	1	1005-0100
C8	Cap Tan 10 UF 20V 10%	1	1008-0100
C9	Cap Mica 910 PF	1	1001-0911
C10	Cap Mica 1700 PF	1	1001-0172
C11	Cap Mica 1700 PF	1	1001-0172
C12	Cap Mica 910 PF	1	1001-0911
C13	Cap Tan 10 UF 20V 10%	1	1008-0100
C14	Cap Tan 10 UF 20V 10%	1	1008-0100
C15	Cap Cer Disc 0.1 UF 12%	1	1005-0100
C16	Cap Tan 10 UF 20V 10%	1	1008-0100
C17	Cap Tan 100 UF 20V 20%	1	1008-0102
C18	Cap Cer Disc 0.1 UF 12V	1	1005-0100
C19	Cap Cer Disc 0.1 UF 12V	1	1005-0100
C20	Not Used		
C21	Cap Tan 100 UF 20V 20%	1	1008-0102
C22	Cap Mica 1500 PF	1	1001-0152
C23	Cap Tan 100 UF 20V 20%	1	1008-0102
C24	Cap Mica 820 PF	1	1001-0821
C25	Cap Poly .033 UF 100V	1	1002-0331
C27	Cap Mica 1700 PF	1	1001-0172
C28	Cap Poly 0.1 UF 100V	1	1002-0011
C30	Cap Mica 56 PF	1	1001-0560
C31	Cap Cer Disc 0.1 UF 12V	1	1005-0100
C32	Cap Tan 10 UF 20V 10%	1	1008-0100
C33	Cap Elect 470 UF	1	1010-0471
C34	Cap Tan 10 UF 20V 10%	1	1008-0100
C35	Cap Tan 100 UF 20V 20%	1	1008-0102
C36	Cap Tan 100 UF 20V 20%	1	1008-0102
C37	Cap Cer Disc 0.1 UF 12V	1	1005-0100
C38*	Cap Mica 75 PF	1	1001-0750
C39	Cap Tan 100 UF 20V 20%	1	1008-0102
C40	Cap Tan 100 UF 20V 20%	1	1008-0102
C41	Cap Tan 10 UF 20V 10%	1	1008-0100
C42	Cap Cer Disc 0.1 UF	1	1005-0100
C43	Cap Tan 100 UF	1	1008-0102
	*Denotes Factory Select Value		

www.SteamPoweredRadio.Com

CKT REF	DESCRIPTION	QTY	TFT STOCK NO.
F1	Filter Low Pass 75 KHz	1	1052-0002
L3	Inductor 1.08 MH	1	1577-0920
L4	Inductor 1.18 MH	1	1577-1000
L5	Inductor 1.08 MH	1	1577-0920
L6	Choke RF 2.2 MH	1	1531-0222
L7	Inductor 1.08 MH	1	1577-0920
L8	Inductor 1.18 MH	1	1577-1000
L9	Inductor 3.5 MH	1	1550-0142
Q1	Trans SN5087	1	1271-5087
Q2	Trans 2N5087	1	1271-5087
Q3	Trans 2N5089	1	1271-5089
R1	Res Car Comp 2.2K 1/4W ±5%	1	1065-2201
R2	Res Var PC MT 10K 1T	1	1072-1002
R3	Res Car Comp 15K 1/4Q ±5%	1	1065-1002
R4	Res Car Comp 2.2K 1/4W ±5%	1	1065-2201
R5	Res Car Comp 820 1/4W ±5%	1	1065-0820
R6	Res MT FLM 1.82K 1/8W ±1%	1	1061-1821
R7	Res Car Comp 47 1/4Q ±5%	1	1065-0047
R8	Res Car Comp 220 1/4W ±1%	1	1065-0220
R10	Res MT FLM 200 1/8W ±1%	1	1061-0200
R12	Res MT FLM 1K 1/8W ±1%	1	1061-1001
R13	Res Car Comp 100 1/4W ±5%	1	1065-0100
R15	Res MT FLM 13.3K 1/8W 1%	1	1061-1332
R16	Res MT FLM 2K 1/8W ±1%	1	1061-2001
R17	Res Car 1K 1/4W 5%	1	1065-1001
R19	Res MT FLM 2K 1/8W ±1%	1	1061-2001
R20	Res Car 1K 1/4W 5%	1	1065-1001
R22	Res MT FLM 124K 1/8W ±1	1	1061-1243
R23	Res Var 250K 1T VT	1	1072-2503
R25	Res Car Comp 15K 1/4W ±5%	1	1065-1502
R26	Res Var PC MT 5K 1T	1	1072-5001
R27	Res Car Comp 10K 1/4W ±5%	1	1065-1002
R28	Res Car Comp 47 1/4W ±5%	1	1065-0047
R29	Res Car Comp 10K 1/4W ±5%	1	1065-1002
R30	Res MT FLM 237K 1/8W ±1%	1	1061-2373
R31	Res MT FLM 1.21K 1/8W ±1%	1	1061-1211
R32	Res Car Comp 47 1/4W ±5%	1	1065-0047

www.SteamPoweredRadio.Com

CKT REF	DESCRIPTION	QTY	TFT STOCK NO.
R33	Not Used		
R34	Res MT FLM 20K 1/8W 1%	1	1061-2002
U1	I/C S 74121	1	1100-7412
U2	I/C L 356N	1	1100-0356
U3	I/C NE5534N	1	1100-5534
U4	I/C LF356N	1	1100-0356
	Socket I/C 8 Pin	3	2250-1008
	Socket I/C 14 Pin	1	2250-1014
	P.C. Bd Comp Baseband	1	1600-1760
	P.C. Bd Extractor	2	1650-6100
	Nut 6-32	2	2111-0011
ASCH	Schematic		6601-2200
ATPR	Test Procedure		5104-0109
ATDS	Test Data Sheet		5108-0004

www.SteamPoweredRadio.Com

NEXT ASSY	USED ON	REVISIONS
6608-3251	7701	B REMOVED

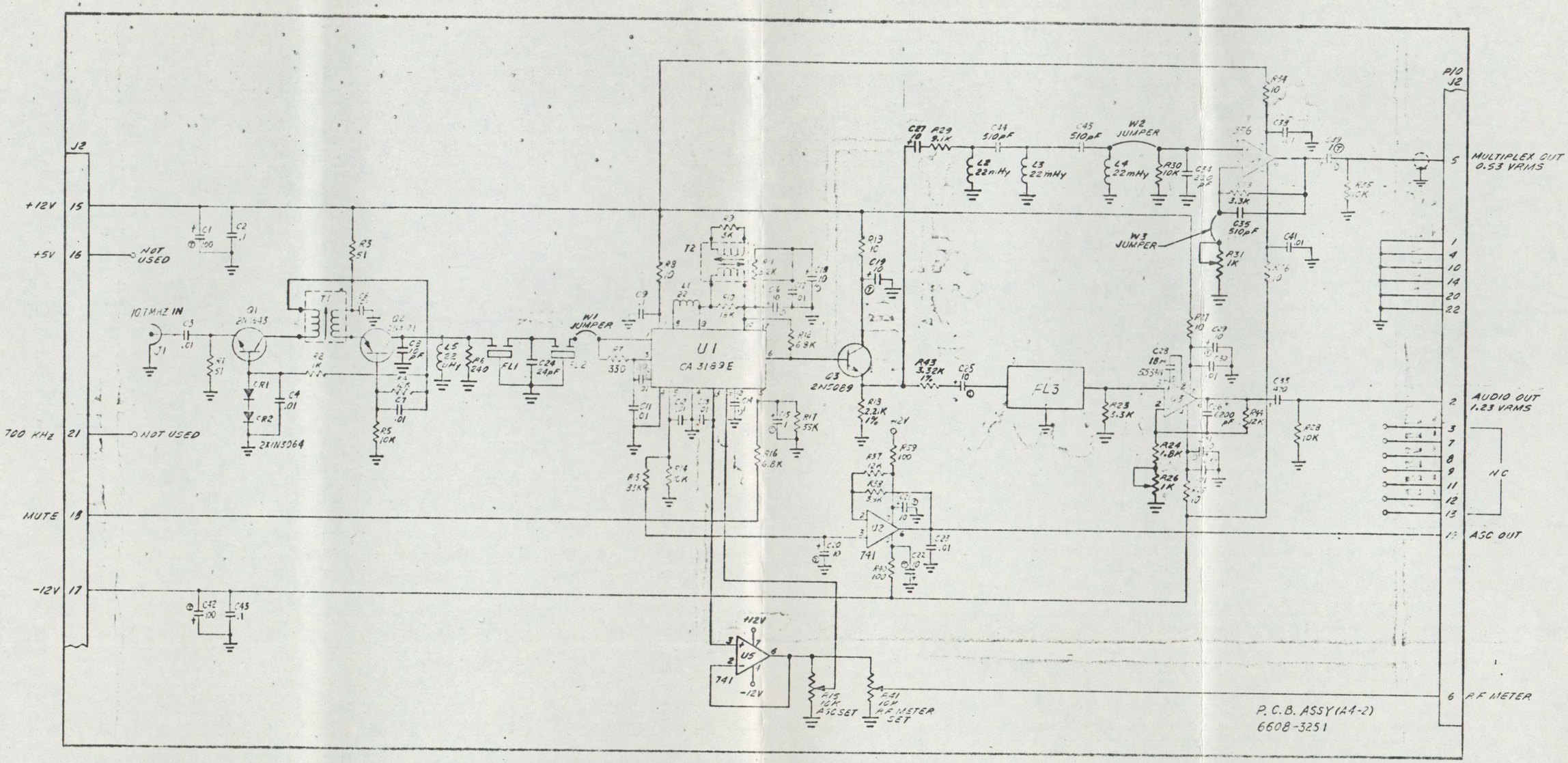

* INSTALLED FOR 75 μsec DE-EMPHASIS ONLY

LAST USED	NOT USED
C45	C5, C36, C37, C40
CR2	
FL3	
J2	
L5	
Q3	
R44	R20, R21, R22, R32, R42
T2	
U5	
W3	

ITEM NO	EN NO	PART NO	DESCRIPTION	REF DES
QTY PER ASSY			LIST OF MATERIALS	

REMOVE ALL BURRS AND SHARP EDGES

TOLERANCES UNLESS OTHERWISE SPECIFIED .XX ± ~ .XXX ± ~ ANGULAR ± ~

DO NOT SCALE THIS PRINT

DRAWN BY / CHK BY / PROJ ENG / MFG ENG / APPD / APPD / ECO NO

TIME & FREQUENCY TECHNOLOGY INC
3000 Olcott St. Santa Clara, California 95050
(408) 246-8015

TITLE SCHEMATIC 10.7MHz MONO. I.F. FIG 6-

SIZE D DRAWING NO 6608-3251 REV B

If You Didn't Get This From My Site,
Then It Was Stolen From...
www.SteamPoweredRadio.Com

NEXT ASSY	USED ON	REVISIONS					
		SYM	DESCRIPTION	DR	CHK	AUTH	DATE
5102-3100	7701	B	REMOVED SK	[illegible]	[illegible]	96	[illegible]

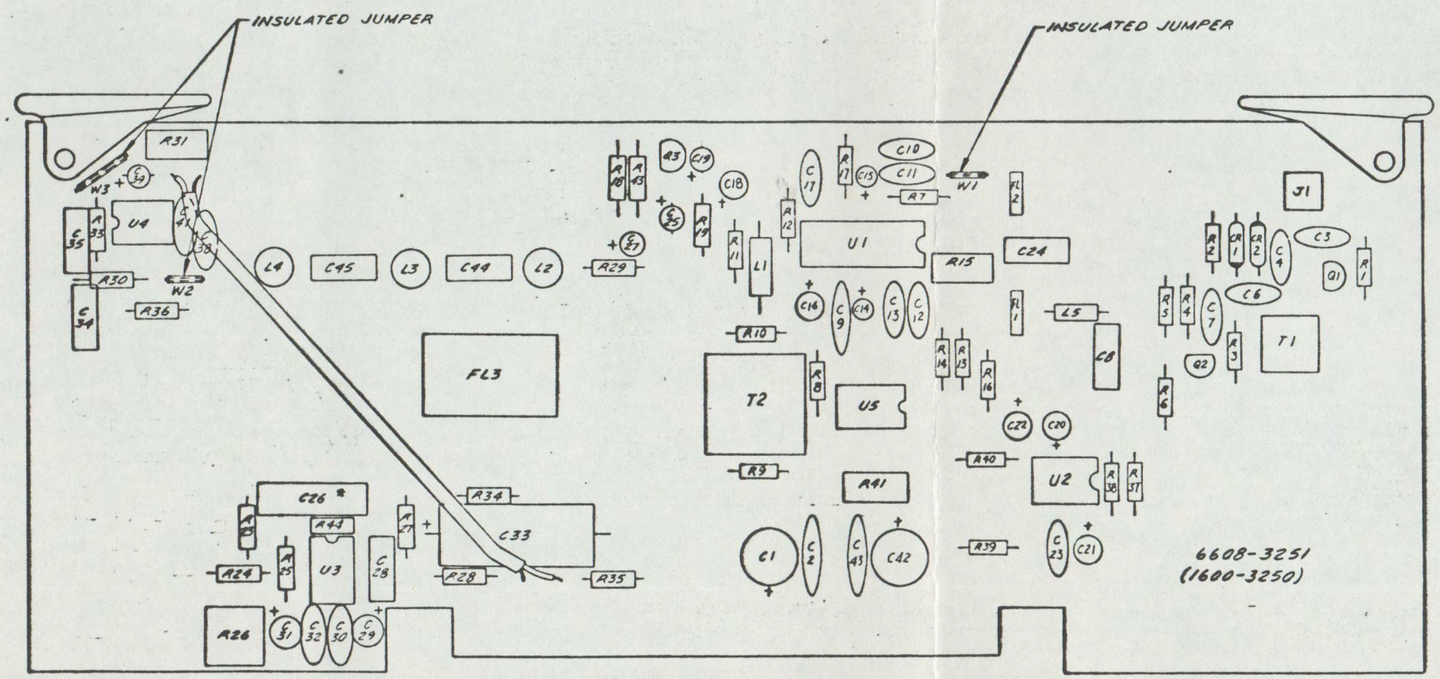

REF: SCHEMATIC 6601-3251
* INSTALLED FOR 75μSEC DE-EMPHASIS ONLY.

	ITEM NO.	EN NO.	PART NO.	DESCRIPTION	REF DES
QTY PER ASSY				LIST OF MATERIALS	

REMOVE ALL BURRS AND SHARP EDGES

TOLERANCES UNLESS OTHERWISE SPECIFIED
.XX ± ANGULAR
.XXX ± ±

DO NOT SCALE THIS PRINT

DRAWN BY	[illegible]	DATE [illegible]
CHK BY	[illegible]	6/5/79
PROJ ENG	[illegible]	
MFG ENG	[illegible]	10/11/79
APPD	[illegible]	[illegible]
APPD		
ECO NO		

TFT TIME & FREQUENCY TECHNOLOGY INC.
3000 Olcott St. Santa Clara California 95050
(408) 246-6365

TITLE P.C. BD ASSY MONO I.F. 10.7 MHZ

SIZE D DRAWING NO 6608-3251 REV B

SCALE SHT 1 OF 1

www.SteamPoweredRadio.Com

BISHOP GRAPHICS/ACCUPRESS REORDER NO. A-1538

Model 7701 A4-2 10.7 MHz IF Assembly # 6608-3251
Rev B

CKT REF	DESCRIPTION	QTY	TFT STOCK NO.
C1	Cap Tan 100 MF	1	1008-0102
C2	Cap Cer Disc .1 MF	1	1005-0100
C3	Cap Cer Disc .1 MF	1	1005-0100
C4	Cap Cer Disc .1 MF	1	1005-0100
C5	Not Used		
C6	Cap Cer Disc .01 MF	1	1005-1039
C7	Cap Cer Disc .01 MF	1	1005-1039
C8	Cap Mica 10 pf	1	1001-0100
C9	Cap Cer Disc .1 MF	1	1005-0100
C10	Cap Cer Disc .01 MF	1	1005-1039
C11	Cap Cer Disc .01 MF	1	1005-1039
C12	Cap Cer Disc .01 MF	1	1005-1039
C13	Cap Cer Disc .01 MF	1	1005-1039
C14	Cap Tan 1 MF	1	1008-0011
C15	Cap Tan 1 MF	1	1008-0011
C16	Cap Tan 10 MF	1	1008-0100
C17	Cap Cer Disc .01 MF	1	1005-1039
C18	Cap Tan 10 MF	1	1008-0100
C19	Cap Tan 10 MF	1	1008-0100
C20	Cap Tan 10 MF	1	1008-0100
C21	Cap Tan 10 MF	1	1008-0100
C22	Cap Tan 10 MF	1	1008-0100
C23	Cap Cer Disc .01 MF	1	1005-1039
C24	Cap Mica 24 pf	1	1001-0240
C25	Cap Tan 10 MF	1	1008-0100
C26	Cap Mica 6200 pf	1	1001-0622
C27	Cap Tan 10 MF	1	1008-0100
C28	Cap Mica 18 PF	1	1001-0180
C29	Cap Tan 10 MF	1	1008-0100
C30	Cap Cer Dis .01 MF	1	1005-1039
C31	Cap Tan 10 MF	1	1008-0100
C32	Cap Cer Disc .01 MF	1	1005-1039
C33	Cap Elect 470 MF	1	1010-0471
C34	Cap Mica 220 pf	1	1001-0221
C35	Cap Mica 510 pf	1	1001-0511
C36	Cap Cer Disc 0.1 MF	1	1005-0100
C37	Not Used		
C38	Cap Cer Disc .01 MF	1	1005-1039
C39	Cap Tan 1 MF	1	1008-0011
C40	Not used		
C41	Cap Cer Disc .01 MF 1	1	1005-1039

www.SteamPoweredRadio.Com

CKT REF	DESCRIPTION	QTY	TFT STOCK NO.
C42	Cap Tan 100 MF	1	1008-0102
C43	Cap Cer Disc .1 MF	1	1005-0100
C44	Cap Mica 510 pf	1	1001-0511
C45	Cap Mica 510 pf	1	1001-0511
CR1	Dio 1N3064	1	1281-3064
CR2	Dio 1N3064	1	1281-3064
FL1	Filt 10.7 MHz Ceramic	1	1052-0107
FL2	Filt 10.7 MHz Ceramic	1	1052-0107
FL3	Filt Lowpass Audio	1	1052-0055
J1	Conn Coaxial	1	2200-0004
L1	Choke 22 UHY	1	1530-0022
L2	RF choke 22 milli Hz molded	1	1532-2202
L3	RF choke 22 milli Hz molded	1	1532-2202
L4	RF choke 22 milli Hz molded	1	1532-2202
L5	Choke 22 u Hz	1	1531-0022
Q1	Trans 2N3643	1	1271-3643
Q2	Trans 2N4121	1	1271-4121
Q3	Trans 2N5089	1	1271-5089
R1	Res Car Comp 1/4W 5% 51	1	1065-0051
R2	Res Car Comp 1/4W 5% 1K	1	1065-1001
R3	Res Car Comp 1/4W 5% 51	1	1065-0051
R4	Res Car Comp 1/4W 5% 12K	1	1065-1202
R5	Res Car Comp 1/4W 5% 10K	1	1065-1002
R6	Res Car Comp 1/4W 5% 240	1	1065-0240
R7	Res Car Comp 1/4W 5% 330	1	1065-0330
R8	Res Car Comp 1/4W 5% 10	1	1065-0010
R9	Res Car Comp 1/4W 5% 3K	1	1065-3001
R10	Res Car Comp 1/4W 5% 18K	1	1065-1802
R11	Res Car Comp 1/4W 5% 8.2K	1	1065-8201
R12	Res Car Comp 1/4W 5% 6.8K	1	1065-6801
R13	Res Car Comp 1/4W 5% 33K	1	1065-3302
R14	Res Car Comp 1/4W 5% 10K	1	1065-1002
R15	Res Var 10K	1	1072-1002
R16	Res Car Comp 1/4W 5% 6.8K	1	1065-6801
R17	Res Car Comp 1/4W 5% 33K	1	1065-3302
R18	Res Car Comp 1/4W 5% 2.2K	1	1065-2201
R19	Res Car Comp 1/4W 5% 10	1	1065-0010

www.SteamPoweredRadio.Com

CKT REF	DESCRIPTION	QTY	TFT STOCK NO.
R20	Not used		
R21	Not used		
R22	Not used		
R23	Res Car Comp 1/4W 5% 3.3K	1	1065-3301
R24	Res Car Comp 1/4W 5% 1.8K	1	1065-1801
R25	Res Car Comp 1/4W 5% 10	1	1065-0010
R26	Res Var PC Mt 1K, 1T	1	1072-1001
R27	Res Car Comp 1/4W 5% 10	1	1065-0010
R28	Res Car Comp 1/4W 5% 10K	1	1065-1002
R29	Res Car Comp 1/4W 5% 9.1K	1	1065-9101
R30	Res Car Comp 1/4W 5% 10K	1	1065-1002
R31	Res Ver PC Mt 1K	1	1072-1001
R32	Not used		
R33	Res Car Comp 1/4W 5% 3.3K	1	1065-3301
R34	Res Car Comp 1/4W 5% 10	1	1065-0010
R35	Res Car Comp 1/4W 5% 10K	1	1065-1002
R36	Res Car Comp 1/4W 5% 10	1	1065-0010
R37	Res Car Comp 1/4W 5% 12K	1	1065-1202
R38	Res Car Comp 1/4W 5% 3.9K	1	1065-3901
R39	Res Car Comp 1/4W 5% 100	1	1065-0100
R40	Res Car Comp 1/4W 5% 100	1	1065-0100
R41	Res Var 10K	1	1072-1002
R42	Not used		
R43	Res Car Comp 1/4W 5% 3.3K	1	1065-3301
R44	Res Car Comp 1/4W 5% 12K	1	1065-1202
T1	XFMR 10.7 MHz IF	1	1501-0656
T2	XFMR 10.7 MHz Quad Coil	1	1501-0655
U1	IC CA3189E	1	1100-3189
U2	IC 741	1	1100-0741
U3	IC NE5534N	1	1100-5534
U4	IC LF356	1	1100-0356
U5	IC 741	1	1100-0741
	Socket IC 8 Pin	4	2250-1008
	Socket IC 16 Pin	1	2250-1016
	Schematic	1	6601-3251
	PC Board	1	1600-3250
	Jumper wire Buss 22 Ga	A/R	4710-0004
	PCB extractor	2	1650-6100

www.SteamPoweredRadio.Com

NEXT ASSY	USED ON
6608-1770	7703
6603-1770	7701

REVISIONS					
SYM	DESCRIPTION	DR	CHK	AUTH	DATE
A	[illegible]				[illegible]
B	REV. PER ECO	KK		555	1-2-78
C	REV. PER ECO	AC	DT	743	4-3-78
D	REV PER ECO	KK	DT	—	6-23-78
E	REV PER ECO 804	MY	AU	96	1/5/79

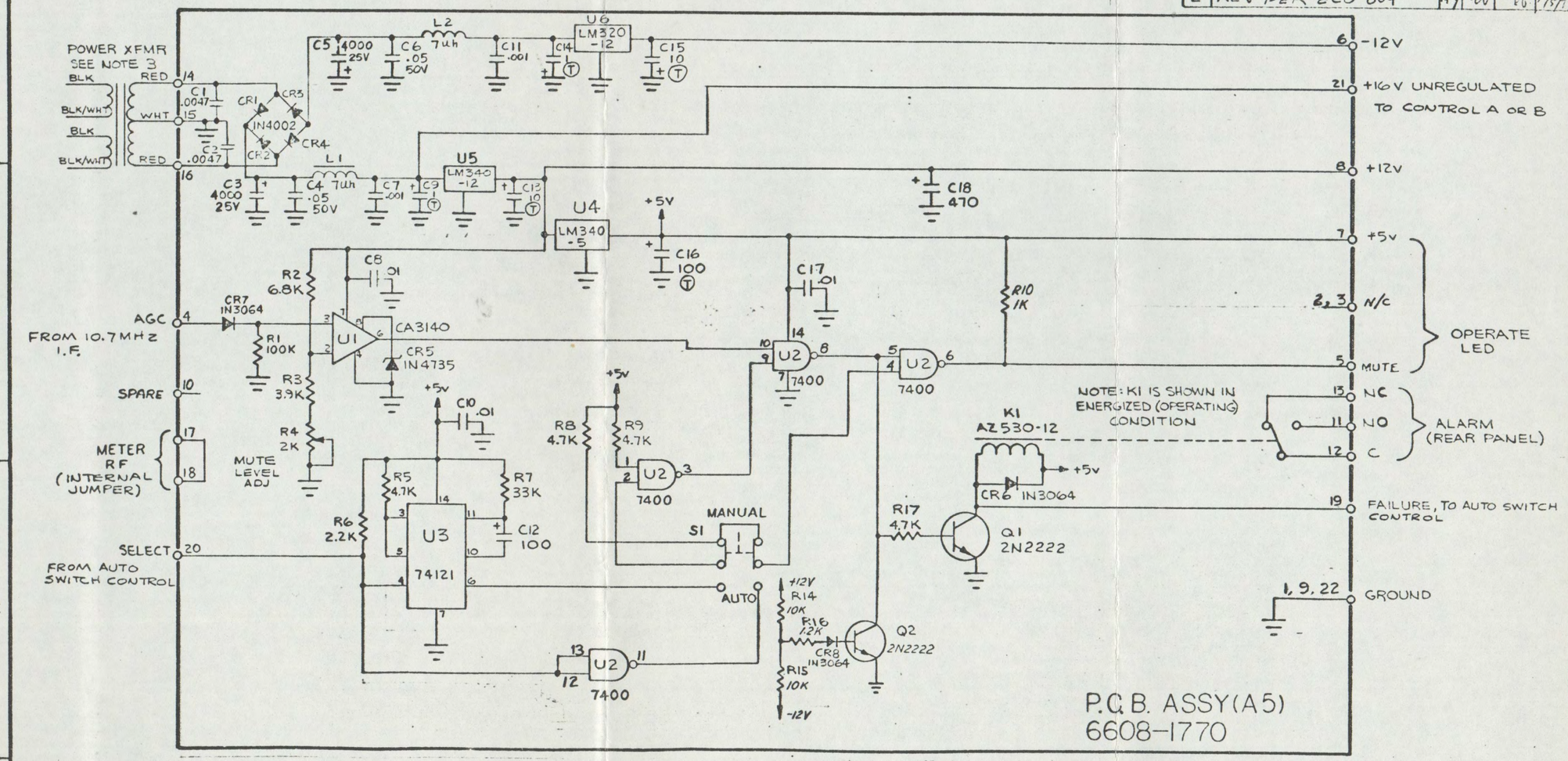

LAST USED	NOT USED
C18	
CR8	
K1	
L2	
Q2	
R17	R11, R12, R13
S1	
U6	

4. (T) DENOTES TANTALUM CAPACITOR
3. FOR 115VAC OPERATION PRIMARIES ARE CONNECTED IN PARALLEL. 230VAC/SERIES.
2. CAPACITOR VALUES ARE IN MICROFARADS
1. RESISTOR VALUES ARE IN OHMS, 1/4W, 5%

NOTES, UNLESS OTHERWISE SPECIFIED;

If You Didn't Get This From My Site,
Then It Was Stolen From...
www.SteamPoweredRadio.Com

QTY PER ASSY	ITEM NO.	EN NO.	PART NO.	DESCRIPTION	REF DES

LIST OF MATERIALS

REMOVE ALL BURRS AND SHARP EDGES

TOLERANCES UNLESS OTHERWISE SPECIFIED
.XX ± ~
.XXX ± ~
ANGULAR ±

DO NOT SCALE THIS PRINT

		DATE
DRAWN BY	[illegible]	[illegible]
CHK BY	[illegible]	[illegible]
PROJ. ENG	[illegible]	[illegible]
MFG ENG	[illegible]	11-7-78
APPD		
APPD		
ECO NO		

T.F.T. TIME & FREQUENCY TECHNOLOGY INC
3000 Olcott St., Santa Clara, California 95051
(408) 246-6365

TITLE: SCHEMATIC A5 POWER SUPPLY & FAIL DET FIG 6.18

SIZE C | DRAWING NO. 6601-2160 | REV E

SCALE ~ | SHT 1 OF 1

DWG. NO. 6601-2160

BISHOP GRAPHICS/ACCUPRESS REORDER NO. A-8815

NEXT ASSY	USED ON
5102-3100	7701
5102-3060	7703

REVISIONS

SYM	DESCRIPTION	DR	CHK	AUTH	DATE
A	REL TO PROD	MY		487	
B	REVISED PER ECO 555	AC	MB		
C	REV. PER ECO 874	MY			

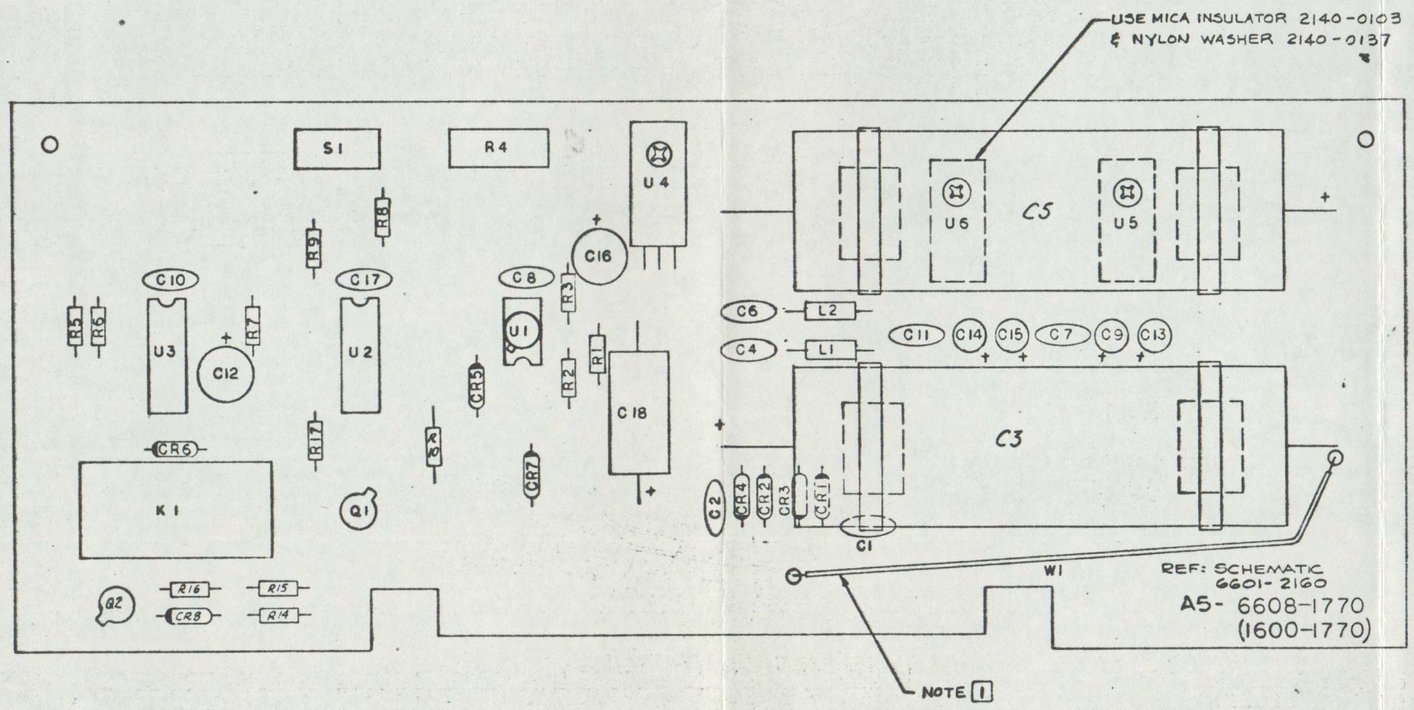

NOTE: 1 JUMPER W1 INSTALLED FOR GND LOOP PURPOSE. DO NOT REMOVE

ITEM NO.	EN NO.	PART NO.	DESCRIPTION	REF DES
QTY PER ASSY			LIST OF MATERIALS	

REMOVE ALL BURRS AND SHARP EDGES

TOLERANCES UNLESS OTHERWISE SPECIFIED
.XX ± ANGULAR
.XXX ± ±

DO NOT SCALE THIS PRINT

DRAWN BY / DATE
CHK BY
PROJ ENG
MFG ENG
APPD
APPD
ECO NO

T.F.T. TIME & FREQUENCY TECHNOLOGY INC
3000 Olcott St. Santa Clara California 95050
(408) 246-6365

TITLE A5 PWR SUPPLY ASSY

SIZE D DRAWING NO 6608-1770 REV C

SCALE — SHT 1 OF 1

DWG NO. 6608-1770

www.SteamPoweredRadio.Com

BISHOP GRAPHICS/ACCUPRESS REORDER NO. A-1538

Model 7703 (A5) Power Supply & Fail Det Assembly # 6608-1770
Rev C

CKT REF	DESCRIPTION	QTY	TFT STOCK NO.
C1	Cap Cer Disc .0047	1	1005-4749
C2	Cap Cer Disc .0047	1	1005-4749
C3	Cap Elect 4000 MF 25V	1	1010-0402
C4	Cap Cer Disc 0.5 UF	1	1005-5039
C5	Cap Elect 4000 MF 25V	1	1010-0402
C6	Cap Cer Disc .05 UF	1	1005-5039
C7	Cap Cer Disc .001 UF	1	1005-1049
C8	Cap Cer Disc .01 UF	1	1005-1039
C9	Cap Tan 1 UF 35V	1	1008-0011
C10	Cap Cer Disc 0.1 UF	1	1005-1039
C11	Cap Cer Disc .001 UF	1	1005-1049
C12	Cap Tan 100 UF 20V 20%	1	1008-0102
C13	Cap Tan 10 UF 20V 10%	1	1008-0100
C14	Cap Tan 1 UF 35V	1	1008-0011
C15	Cap Tan 10 UF 20V 10%	1	1008-0100
C16	Cap Tan 100 UF 20V 20%	1	1008-0102
C17	Cap Cer Disc .01 UF	1	1005-1039
C18	Cap Elect 470	1	1010-0471
CR1	Diode IN4002 Rect	1	1284-4002
CR2	Diode IN4002 Rect	1	1284-4002
CR3	Diode IN4002 Rect	1	1284-4002
CR4	Diode IN4002 Rect	1	1284-4002
CR5	Diode IN4735 Zener	1	1283-4735
CR6	Diode IN3064	1	1281-3064
CR7	Diode IN3064	1	1281-3064
CR8	Diode IN306	1	1281-3064
K1	Relay AZ530-12-1	1	1880-0002
L1	Choke RF 7 UH	1	1530-0025
L2	Choke RF 7 UH	1	1530-0025
Q1	Trans 2N2222	1	1271-2222
Q2	Trans 2N2222	1	1271-2222
R1	Res Car Comp 100K 1/4W ±5%	1	1065-1003
R2	Res Car Comp 6.8K 1/4W ±5%	1	1065-6801
R3	Res Car Comp 3.9K 1/4W ±5%	1	1065-3901
R4	Res Var 2K 1T	1	1072-2001
R5	Res Car Comp 4.7K 1/4W ±5%	1	1065-4701
R6	Res Car Comp 2.2K 1/4W ±5%	1	1065-2201
R7	Res Car Comp 33K 1/4W ±5%	1	1065-3302
R8	Res Car Comp 4.7K 1/4 ±5%	1	1065-4701

www.SteamPoweredRadio.Com

CKT REF	DESCRIPTION	QTY	TFT STOCK NO.
R9	Res Car Comp 4.7K 1/4W ± 5%	1	1065-4701
R10	Res Car Comp 1K 1/4W ± 5%	1	1065-1001
R14	Res Car Comp 10K 1/4W ± 5%	1	1065-1002
R15	Res Car Comp 10K 1/4W ± 5%	1	1065-1002
R16	Res Car Comp 1.2K 1/4W ± 5%	1	1065-1201
R17	Res Car Comp 4.7K 1/4W ± 5%	1	1065-4701
S1	Switch Slide 2 Pos	1	1840-2200
U1	I/C CA3140	1	1100-3140
U2	I/C SN7400N	1	1100-7400
U3	I/C SN74121	1	1100-7412
U4	I/C LM340T-5	1	1100-7805
U5	I/C LM340T-12	1	1100-0340
U6	I/C LM320T-12	1	1100-0320
	Insulator Mica TO220 Pkg	1	2140-0103
	PC Bd Extractor	2	1650-6100
	Tie Mounts	4	2140-0141
	TY Wrap	4	2140-0004
	Socket I/C 14 Pin	2	2250-1014
	Socket I/C 8 Pin	1	2250-1008
	Screw 4-40X 1/4	7	2104-0001
	Nut Kep 4-40	7	2111-0001
	Nylon Washer PWR Transistor	1	2140-0137
	PC Bd Pwr Sup & Fail Det		1600-1770
ASCH	Schematic		6601-2160
ATPR	Test Procedure		5104-0005
ATDS	Test Data Sheet		5108-0005

www.SteamPoweredRadio.Com

NEXT ASSY	USED ON
5102-3050	7771

REVISIONS

SYM	DESCRIPTION	DR	CHK	AUTH	DATE
A	REL TO PROD			487	[illegible]
B	REVISED PER ECO	KK		555	5/7/79
C	REVISED PER ECO 637	AC	[illegible]	[illegible]	5/7/79
D	REVISED PER ECO 820	KK	[illegible]	[illegible]	[illegible]
E	REVISED PER ECO 891	KK	[illegible]	96	[illegible]

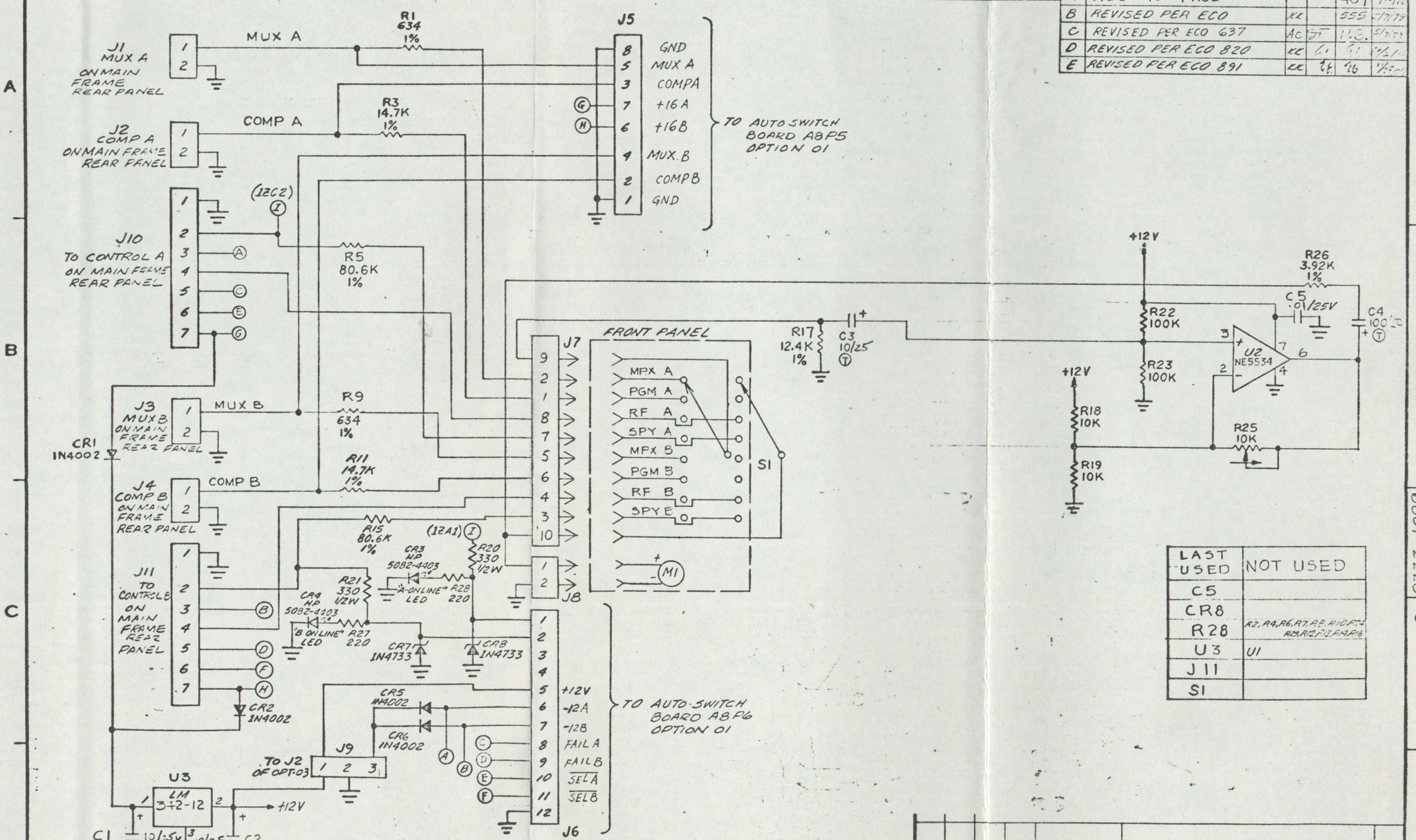

LAST USED	NOT USED
C5	
CR8	
R28	R2, R4, R6, R7, R8, R10, R24, R23, R12, R13, R14, R16
U3	U1
J11	
S1	

NOTES: UNLESS OTHERWISE SPECIFIED;
1. RESISTOR VALUES IN OHMS ±5%, 1/4 WATT
2. CAPACITOR VALUES IN MICROFARADS.
3. RESISTORS R1-R17 1% 1/8W
4. (T) DENOTES TANTALUM CAPACITOR
5. J1, J2, J10 TO REAR PANEL RCVR A
J3, J4, J11 TO REAR PANEL RCVR B
6. REF: PC BD ASSY 6608-1830

QTY PER ASSY	ITEM NO	EN NO	PART NO	DESCRIPTION	REF DES

LIST OF MATERIALS

REMOVE ALL BURRS AND SHARP EDGES

TOLERANCES UNLESS OTHERWISE SPECIFIED
.XX ± ——— ANGULAR
.XXX ± ——— ±

DO NOT SCALE THIS PRINT

		DATE
DRAWN BY	[illegible]	[illegible]
CHK BY	[illegible]	5/7/79
PROJ ENG	[illegible]	[illegible]
MFG ENG	[illegible]	[illegible]
APPD	K.A	
APPD		
ECO NO		

TFT TIME & FREQUENCY TECHNOLOGY INC
3000 Olcott St., Santa Clara, California 95051
(408) 246-6355

TITLE FIG 6.19 A7 AUDIO/METERING

SIZE C DRAWING NO 6601-2220 REV E

SCALE ——— SHT 1 OF 1

6601-2220

If You Didn't Get This From My Site, Then It Was Stolen From...
www.SteamPoweredRadio.Com

BISHOP GRAPHICS/ACCUPRESS REORDER NO. A-8835

REVISIONS				
ZONE	REV.	DESCRIPTION	DATE	APPROVED
	B	Revised per ECO 638	5/25/79	[illegible]
	C	REVISED PER ECO 821	8/9/79	[illegible]
	D	REVISED PER ECO 893	11/27/79	[illegible]

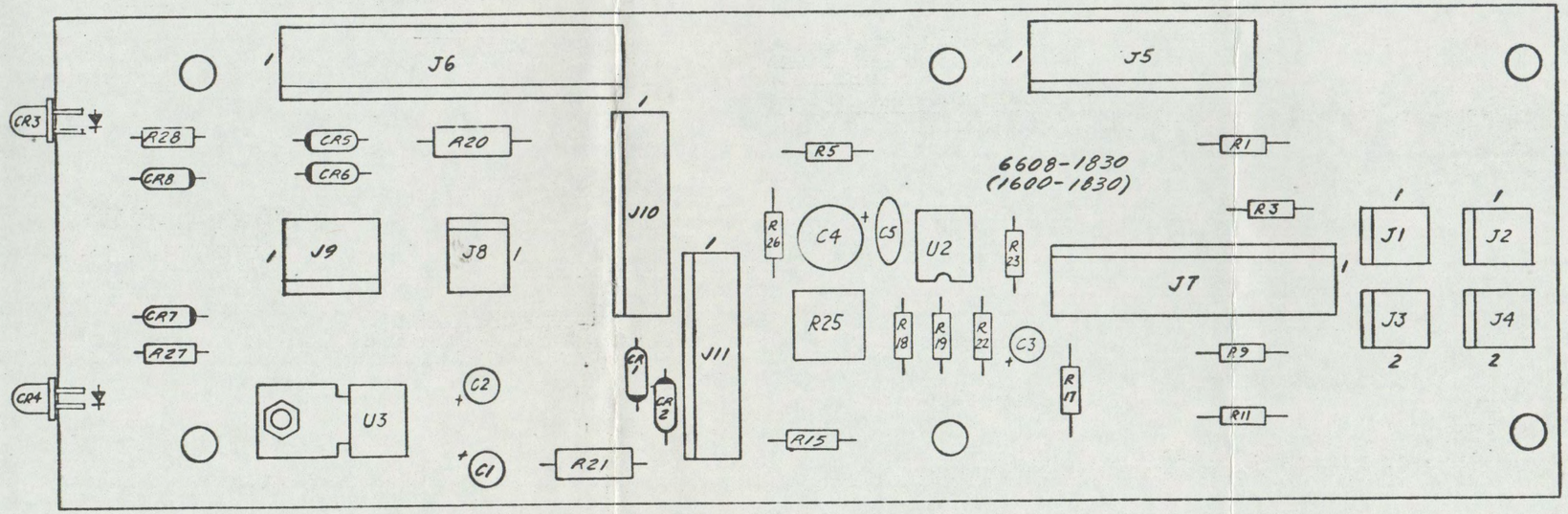

REF SCHEMATIC 6601-2220

QTY REQD	CODE IDENT	PART OR IDENTIFYING NO.	NOMENCLATURE OR DESCRIPTION	MATERIAL SPECIFICATION

PARTS LIST

5102-3050	7771
NEXT ASSY	USED ON
APPLICATION	

UNLESS OTHERWISE SPECIFIED DIMENSIONS ARE IN INCHES TOLERANCES ARE:
FRACTIONS ± DECIMALS .XX ± .XXX ± ANGLES ±

MATERIAL

FINISH

DO NOT SCALE DRAWING

CONTRACT NO.

APPROVALS	DATE
DRAWN Axxa Chen	5-25-79
CHECKED [illegible]	6-19-79
ISSUED [illegible]	1/7/79

MEM TIME & FREQUENCY TECHNOLOGY INC.

PCBD ASSY
A7 AUDIO METERING

SIZE	FSCM NO.	DWG. NO.	REV.
C		6608-1830	D

SCALE ~ SHEET 1 OF 1

DWG. NO. 6608-1830 SH 1 REV D

www.SteamPoweredRadio.Com

BISHOP GRAPHICS/ACCUPRESS
REORDER NO. A-4106

CKT REF	DESCRIPTION	QTY	TFT STOCK NO.
C1	Cap Tant 10UF 25V 20%	1	1008-0100
C2	Cap Tant 10UF 25V 10%	1	1008-0100
C3	Cap Tant 10UF 25V 10%	1	1008-0100
C4	Cap Tant 100UF 20V 20%	1	1008-0102
C5	Cap Cer Disc .01UF	1	1005-1039
CR1	Dio 1N4002 Rect	1	1284-4002
CR2	Dio 1N4002 Rect	1	1284-4002
CR3	LED HP 5082-4403 Red	1	1285-4403
CR4	LED HP 5082-4403 Red	1	1285-4403
CR5	Dio 1N4002 Rect	1	1284-4002
CR6	Dio 1N4002 Rect	1	1284-4002
CR7	Dio 1N4733 Zener	1	1283-4733
CR8	Dio 1N4733 Zener	1	1283-4733
J1	Socket 2 Pin	1	2250-5002
J2	Socket 2 Pin	1	2250-5002
J3	Socket 2 Pin	1	2250-5002
J4	Socket 2 Pin	1	2250-5002
J5	Plug Lock 8 Pin Molex	1	2250-6508
J6	Plug Lock 12 Pin Molex	1	2250-6612
J7	Conn Shell 10 Pin Molex	1	2250-5010
J8	Socket 2 Pin	1	2250-5002
J9	Socket 3 Pin	1	2250-5003
J10	Plug 7 Pin Molex	1	2250-6007
J11	Plug 7 Pin Molex	1	2250-6007
	Socket I/C 8 Pin	1	2250-1008
R1	Res MT FLM 1/8W 1% 634	1	1061-0634
R3	Res MT FLM 1/8W 1% 14.7K	1	1061-1472
R5	Res MT FLM 1/8W 1% 80.6K	1	1061-8062
R9	Res MT FLM 1/8W 1% 634	1	1061-0634
R11	Res MT FLM 1/8W 1% 14.7K	1	1061-1472
R15	Res MT FLM 1/8W 1% 80.6K	1	1061-8062
R17	Res MT FLM 1/8W 1% 12.4K	1	1061-1242
R18	Res Car Comp 1/4W 5% 10K	1	1065-1002
R19	Res Car Comp 1/4W 5% 10K	1	1065-1002
R20	Res Car Comp 1/2W 10% 330	1	1067-0330
R21	Res Car Comp 1/2W 10% 330	1	1067-0330
R22	Res Car Comp 1/4W 5% 100K	1	1065-1003
R23	Res Car Comp 1/4W 5% 100K	1	1065-1003
R25	Res Var PC MT 10K 1T	1	1072-1002
R26	Res MT FLM 1/8W 1% 3.92K	1	1061-3921
R27	Res Car Comp 1/4W 5% 220	1	1065-0220
R28	Res Car Comp 1/4W 5% 220	1	1065-0220

www.SteamPoweredRadio.Com

CKT REF	DESCRIPTION	QTY	TFT STOCK NO.
U2	I/C NE5534N	1	1100-5534
U3	I/C REG 1/2 Amp +12V	1	1100-4212
	P.C. Board		1600-1830
ASCH	Schematic		6601-2220
ATDS	Test Data Sheet		5108-0008
ATPR	Test Procedure		5104-0008
	Jumper Wire (Hook-Up)		

www.SteamPoweredRadio.Com

LAST USED	NOT USED
C37	C18, C22, C26, C30, C33, C6, C7
CR11	CR5, CR6, CR7, CR10, CR11, CR3, CR4
Q9	Q2, Q3, Q5, Q6
R64	R4, R5, R6, R7, R13, R14, R35, R43, R44, R47, R48, R50, R54, R56, R57, R15, R16, R59, R60, R61, R62, R36, R3, R26, R32, R33, R39
U8	
J8	J3, J4, J5, J6
P6	P1, P2, P3, P4

NEXT ASSY	USED ON
	7771-01

DWG. NO. 6601-2230 SH 1/1 REV. F

REVISIONS

ZONE	REV.	DESCRIPTION		DATE	APPROVED
	A	REL PER ECO 487		11/20/78	
	B	REVISED PER ECO 555	KK	2/5/79	
	C	REVISED PER ECO 755	AC	5/8/79	M.B. 5/1
	D	REVISED PER ECO 815	KK	7/13/79	M. Eck 7/13
	E	REVISED PER ECO			
	F	REVISED PER ECO 862	KK	9/7/79	

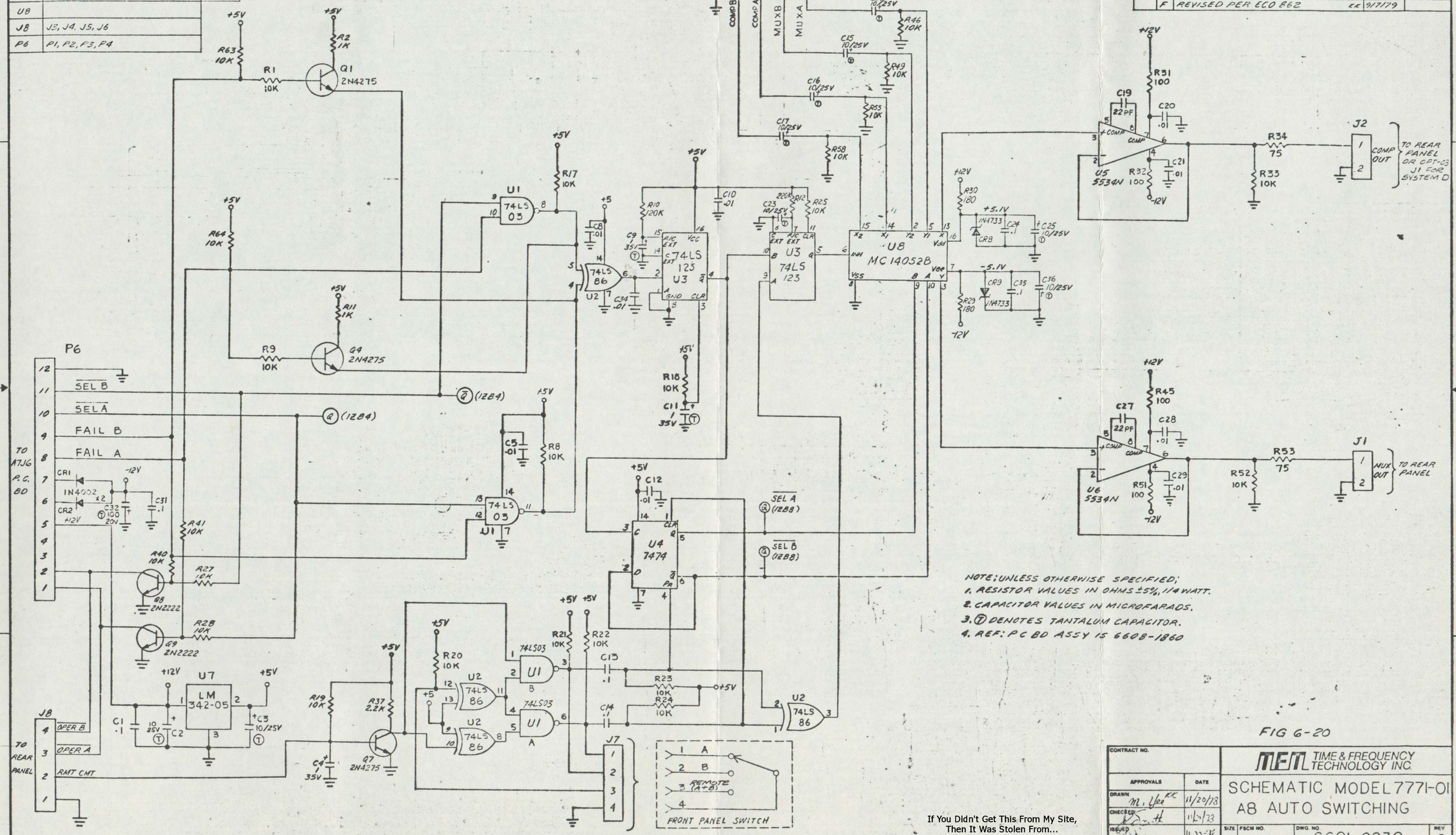

NOTE; UNLESS OTHERWISE SPECIFIED;
1. RESISTOR VALUES IN OHMS ±5%, 1/4 WATT.
2. CAPACITOR VALUES IN MICROFARADS.
3. Ⓣ DENOTES TANTALUM CAPACITOR.
4. REF: PC BD ASSY IS 6608-1860

FIG 6-20

CONTRACT NO.		MEM TIME & FREQUENCY TECHNOLOGY INC.		
APPROVALS	DATE	SCHEMATIC MODEL 7771-01 A8 AUTO SWITCHING		
DRAWN M. Yee KK	11/20/78			
CHECKED [signature]	11/20/78			
ISSUED [signature]	11-22-78	SIZE D	FSCM NO.	DWG. NO. 6601-2230 REV F
		SCALE NONE		SHEET 1/1

If You Didn't Get This From My Site, Then It Was Stolen From... www.SteamPoweredRadio.Com

BISHOP GRAPHICS/ACCUPRESS REORDER NO. A-4108

REVISIONS				
ZONE	REV.	DESCRIPTION	DATE	APPROVED
	B	Revised per ECO 756	5-21-79	N. Baker
	C	REVISED PER ECO 816	7-13-79	N. Baker
	D	REVISED PER ECO 861	10-2-79	[illegible]
	E	REVISED PER ECO 902	10-17-79	[illegible]

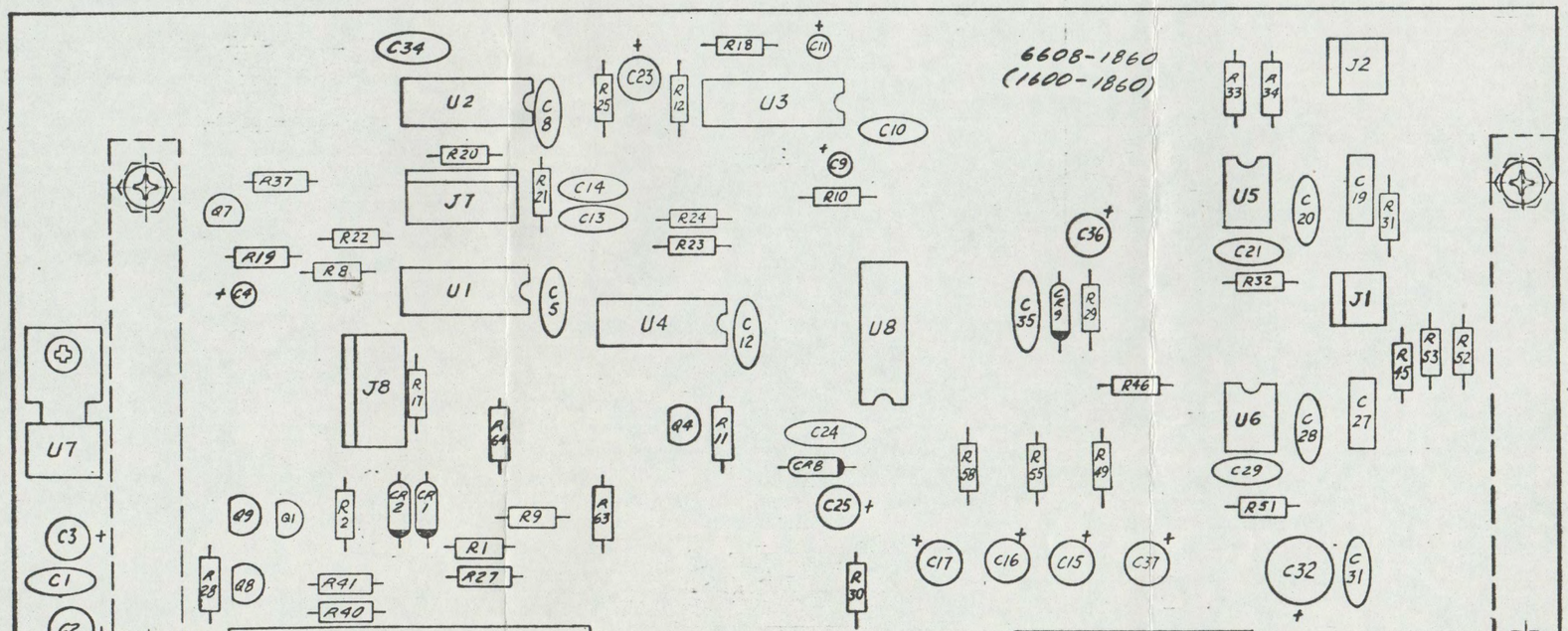

NOTE: 1. FOR SCHEMATIC SEE. 6601-2230

2 SELF-LOCKING NUTS (PART NO. 2111-0002) MUST BE INSTALLED ON THIS SIDE OF ASSEMBLY, AS SHOWN

3 USE 4-40 X .31 LONG SCREW (PART NO. 2104-0011) TO FASTEN BRACKET (PART NO. 2130-9002). DO NOT SUBSTITUTE.

4. THIS ASSEMBLY IS USED ON SYSTEMS B AND D FOR AUTO SWITCHING TO "HOT STANDBY" RECEIVER AND IS INSTALLED ONTO RECEIVER MAINFRAME ASSEMBLY 7771 AS OPTION 01.

QTY REQD	CODE IDENT	PART OR IDENTIFYING NO.	NOMENCLATURE OR DESCRIPTION	MATERIAL SPECIFICATION

PARTS LIST

NEXT ASSY	USED ON
5102-3050	7771-01

APPLICATION

UNLESS OTHERWISE SPECIFIED DIMENSIONS ARE IN INCHES
TOLERANCES ARE:
FRACTIONS ± ~ DECIMALS .XX ± ~ .XXX ± ~ ANGLES ± ~

MATERIAL

FINISH

DO NOT SCALE DRAWING

CONTRACT NO.

APPROVALS	DATE
DRAWN Jana Cline	5-21-79
CHECKED N. Baker	5/21/79
ISSUED Ed Fang	10/2/79

MEM TIME & FREQUENCY TECHNOLOGY INC.

P C BD ASSY
A8 AUTO SWITCHING BOARD

SIZE C | FSCM NO. | DWG. NO. 6608-1860 | REV. E

SCALE 2:1 | SHEET 1 OF 1

www.SteamPoweredRadio.Com

BISHOP GRAPHICS/ACCUPRESS REORDER NO. A-4106

Model 7771-01 A8 Auto Switching Assy Assembly #6608-1860
Rev E

CKT REF	DESCRIPTION	QTY	TFT STOCK NO.
C1	Cap Cer Disc .1 MFD	1	1005-0100
C2	Cap Tan 10 MFD 16V	1	1008-0010
C3	Cap Tan 10 MFD 16V	1	1008-0010
C4	Cap Tan 1 MFD	1	1008-0011
C5	Cap Cer Disc .01 MFD	1	1005-1039
C6	Not Used		
C7	Not Used		
C8	Cap Cer Disc .01 MFD	1	1005-1039
C9	Cap Tan 1 MFD	1	1008-0011
C10	Cap Cer Disc .01 MFD	1	1005-1039
C11	Cap Tan 1 MFD	1	1008-0011
C12	Cap Cer Disc .01 MFD	1	1005-1039
C13	Cap Cer Disc .1 MFD	1	1005-0100
C14	Cap Cer Disc .1 MFD	1	1005-0100
C15	Cap Tan 10 MFD 16V	1	1008-0010
C16	Cap Tan 10 MFD 16V	1	1008-0010
C17	Cap Tan 10 MFD 16V	1	1008-0010
C18	Not Used		
C19	Cap Mica 22PF	1	1001-0220
C20	Cap Cer Disc .01	1	1005-1039
C21	Cap Cer Disc .01 MF	1	1005-1039
C22	Not Used		
C23	Cap Tan 10 MF 16V	1	1008-0010
C24	Cap Cer Disc .1 M2	1	1005-0100
C25	Cap Tan 10 MF	1	1008-0010
C26	Not Used		
C27	Cap Mica 22 PF	1	1001-0220
C28	Cap Cer Disc .01 MF	1	1005-1039
C29	Cap Cer Disc .01 MF	1	1005-1039
C30	Not Used		
C31	Cap Cer Disc .1 MF	1	1005-0100
C32	Cap Tan 100 MF	1	1008-0102
C33	Not Used		
C34	Cap Cer Disc .01 MF	1	1005-1039
C35	Cap Cer Disc .1 MF	1	1005-0100
C36	Cap Tan 10 MF 16V	1	1008-0010
C37	Cap Tan 10 MF 16V	1	1008-0010
CR1	DIO IN4002	1	1284-4002
CR2	DIO IN4002	1	1284-4002
CR3	Not Used		
CR4	Not Used		
CR5	Not Used		

www.SteamPoweredRadio.Com

CKT REF	DESCRIPTION	QTY	TFT STOCK NO.
CR6	Not Used		
CR7	Not Used		
CR8	DIO IN4733 Zener	1	1283-4733
CR9	DIO IN4733 Zener	1	1283-4733
CR10	Not Used		
CR11	Not Used		
Q1	Trans 2N4275	1	1271-4275
Q2	Not Used		
Q3	Not Used		
Q4	Trans 2N4275	1	1271-4275
Q5	Not Used		
Q6	Not Used		
Q7	Trans 2N4275	1	1271-4275
Q8	Trans 2N2222	1	1271-2222
Q9	Trans 2N2222	1	1271-2222
R1	Res Car Comp 1/4W 5% 10K	1	1065-1002
R2	Res Car Comp 1/4W 5% 1K	1	1065-1001
R3	Not Used		
R4	Not Used		
R5	Not Used		
R6	Not Used		
R7	Not Used		
R8	Res Car Comp 1/4W 5% 10K	1	1065-1002
R9	Res Car Comp 1/4W 5% 10K	1	1065-1002
R10	Res Car Comp 1/4W 5% 120K	1	1065-1203
R11	Res Car Comp 1/4W 5% 1K	1	1065-1001
R12	Res Car Comp 1/4W 5% 220K	1	1065-2203
R13	Not Used		
R14	Not Used		
R15	Not Used		
R16	Not Used		
R17	Res Car Comp 1/4W 5% 10K	1	1065-1002
R18	Res Car Comp 1/4W 5% 10K	1	1065-1002
R19	Res Car Comp 1/4W 5% 10K	1	1065-1002
R20	Res Car Comp 1/4W 5% 10K	1	1065-1002
R21	Res Car Comp 1/4W 5% 10K	1	1065-1002
R22	Res Car Comp 1/4W 5% 10K	1	1065-1002
R23	Res Car Comp 1/4W 5% 10K	1	1065-1002
R24	Res Car Comp 1/4W 5% 10K	1	1065-1002
R25	Res Car Comp 1/4W 5% 10K	1	1065-1002
R26	Not Used		
R27	Res Car Comp 1/4W 5% 10K	1	1065-1002
R28	Res Car Comp 1/4W 5% 10K	1	1065-1002
R29	Res Car Comp 1/4W 5% 180	1	1065-0180

www.SteamPoweredRadio.Com

CKT REF	DESCRIPTION	QTY	TFT STOCK NO.
R30	Res Car Comp 1/4W 5% 180	1	1065-0180
R31	Res Car Comp 1/4W 5% 100	1	1065-0100
R32	Res Car Comp 1/4W 5% 100	1	1065-0100
R33	Res Car Comp 1/4W 5% 10K	1	1065-1002
R34	Res Car Comp 1/4W 5% 75	1	1065-0075
R35	Not Used		
R36	Not Used		
R37	Res Car Comp 1/4W 5% 2.2K	1	1065-2201
R38	Not Used		
R39	Not Used		
R40	Res Car Comp 1/4W 5% 10K	1	1065-1002
R41	Res Car Comp 1/4W 5% 10K	1	1069-1002
R42	Not Used		
R43	Not Used		
R44	Not Used		
R45	Res Car Comp 1/4W 5% 100	1	1065-0100
R46	Res Car Comp 1/4W 5% 10K	1	1065-1002
R47	Not Used		
R48	Not Used		
R49	Res Car Comp 1/4W 5% 10K	1	1065-1002
R50	Not Used		
R51	Res Car Comp 1/4W 5% 100	1	1065-0100
R52	Res Car Comp 1/4W 5% 10K	1	1065-1002
R53	Res Car Comp 1/4W 5% 75	1	1065-0075
R54	Not Used		
R55	Res Car Comp 1/4W 5% 10K	1	1065-1002
R56	Not Used		
R57	Not Used		
R58	Res Car Comp 1/4W 5% 10K	1	1065-1002
R59	Not Used		
R60	Not Used		
R61	Not Used		
R62	Not Used		
R63	Res Car Comp 1/4W 5% 10K	1	1065-1002
R64	Res Car Comp 1/4W 5% 10K	1	1065-1002
U1	IC 74LS03	1	1101-7403
U2	IC 74LS86	1	1101-7486
U3	IC SN74LS123	1	1100-7415
U4	IC 7474	1	1100-7474
U5	IC 5534N	1	1100-5534
U6	IC 5534N	1	1100-5534
U7	IC LM342-05	1	1100-4205
U8	IC MC14052B	1	1100-4052

www.SteamPoweredRadio.Com

CKT REF	DESCRIPTION	QTY	TFT STOCK NO.
J1	Plug 2 Pin	1	2250-6002
J2	Plug 2 Pin	1	2250-6002
J3	Not Used		
J4	Not Used		
J5	Not Used		
J6	Not Used		
J7	Plug 4 Pin	1	2250-6004
J8	Plug 4 Pin	1	2250-6004
P1	Not Used		
P2	Not Used		
P3	Not Used		
P4	Not Used		
P5	Conn Molex 8 Pin	1	2250-5208
P6	Conn Molex 12 Pin	1	2250-5212
	Socket IC 14 Pin	3	2250-1014
	Socket IC 8 Pin	2	2250-1008
	Socket IC 16 Pin	2	2250-1016
	P. C. Board	1	1600-1860
	Schematic	REF	6601-2230
	Test Procedure	REF	5104-0009
	Test Data Sheet	REF	5108-0009
	Screw P.H. 4-40 x 5/16	4	2104-4516
	Nut 4-40 Self Lock	4	2111-0002
	Bracket - 1569 Keystone	2	2130-9002

www.SteamPoweredRadio.Com

NEXT ASSY	USED ON
6608-1780	7703
6608-1780	7701

REVISIONS					
SYM	DESCRIPTION	DR	CHK	AUTH	DATE
[illegible]	REV. PER ECO 555	M.Y.	[illegible]		[illegible]
[illegible]	REV PER ECO 665	MY	[illegible]	M.B.	[illegible]
D	REV PER ECO 894	[illegible]	[illegible]	[illegible]	[illegible]

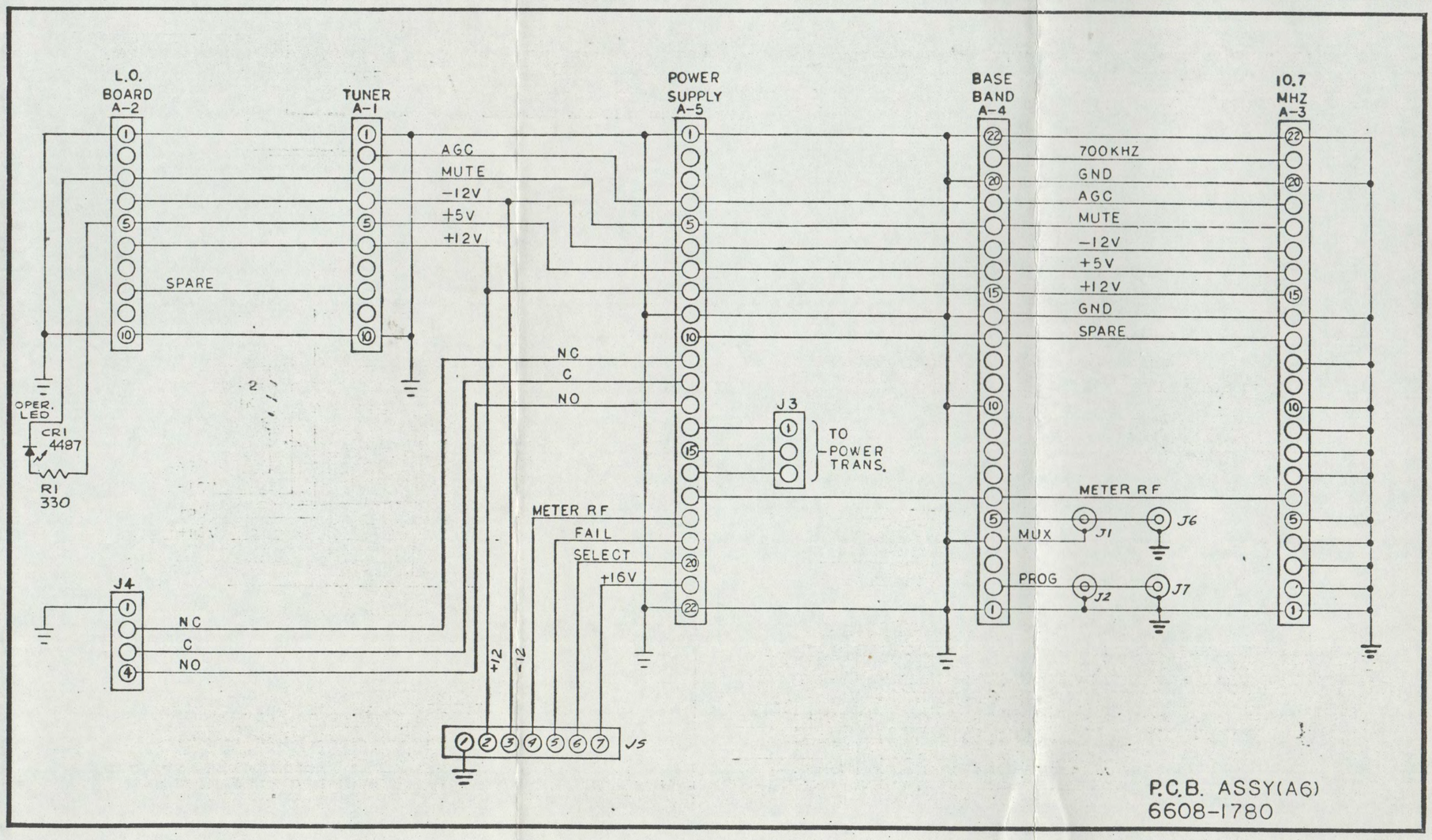

QTY PER ASSY	ITEM NO.	EN NO.	PART NO.	DESCRIPTION	REF. DES

LIST OF MATERIALS

REMOVE ALL BURRS AND SHARP EDGES

TOLERANCES UNLESS OTHERWISE SPECIFIED
.XX ± ANGULAR ±
.XXX ± ±

DO NOT SCALE THIS PRINT

		DATE
DRAWN BY	[illegible]	[illegible]
CHK. BY	[illegible]	[illegible]
PROJ. ENG	[illegible]	[illegible]
MFG. ENG	[illegible]	11-13-75
APPD	Q.A.	
APPD		
ECO NO		

TFT TIME & FREQUENCY TECHNOLOGY INC
3000 Olcott St., Santa Clara, California 95051
(408) 246-6365

TITLE MOTHER BD. RCVR FIG 6.21

SIZE C | DRAWING NO 6601-2170 | REV D

SCALE | SHT 1 OF 1

DWG. NO. 6601-2170

If You Didn't Get This From My Site,
Then It Was Stolen From...
www.SteamPoweredRadio.Com

BISHOP GRAPHICS/ACCUPRESS
REORDER NO. A-8835

NEXT ASSY	USED ON
5102-2390	7703

REVISIONS

SYM	DESCRIPTION	DR	CHK	AUTH	DATE
D	REVISED & REDRAWN PER ECO 688	AC	[illegible]	[illegible]	[illegible]

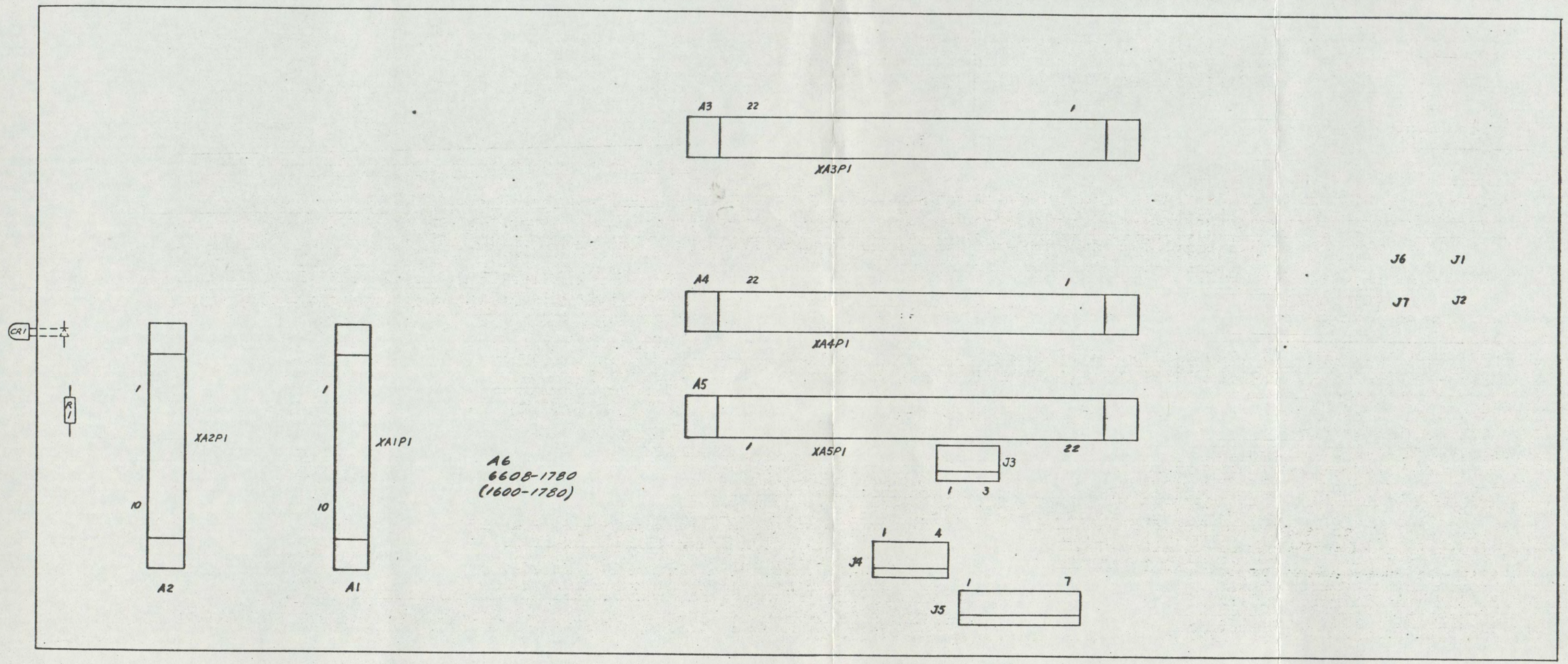

REFERENCE: SCHEMATIC 6601-2170

QTY PER ASSY	ITEM NO.	BN NO.	PART NO.	DESCRIPTION	REF DES

LIST OF MATERIALS

REMOVE ALL BURRS AND SHARP EDGES

TOLERANCES UNLESS OTHERWISE SPECIFIED
.XX ± ~ ANGULAR
.XXX ± ~ ± ~

DO NOT SCALE THIS PRINT

		DATE
DRAWN BY	[illegible]	[illegible]
CHK BY	[illegible]	[illegible]
PROJ ENG	[illegible]	[illegible]
MFG ENG.		
APPD.		
APPD		
ECO NO		

TFT TIME & FREQUENCY TECHNOLOGY INC
3000 Olcott St Santa Clara California 95050
(408) 246-6365

TITLE MOTHER PC BD ASSY (A6) RECEIVER

SIZE D DRAWING NO 6608-1780 REV D

SCALE 2/1 SHT 1 OF

www.SteamPoweredRadio.Com

BISHOP GRAPHICS/ACCUPRESS REORDER NO. A-1538

Model 7703 A6 Mother BD Assy Assembly #6608-1780
Rev D

CKT REF	DESCRIPTION	QTY	TFT STOCK NO.
CR1	LED HP5082-4487 Clear	1	1285-4487
R1	Res Car Comp 330 1/4W ±5%	1	1065-0330
	Conn Edge CD 22 Pin	3	2250-1122
	Conn Edge CD 10 Pin	2	2250-1110
J3	Plug 3 Pin	1	2250-6003
J4	Plug 4 Pin	1	2250-6004
J5	Plug 7 Pin	1	2250-6007
	P. C. BD. Mother A6		1600-1780
ASCH	Schematic		6601-2170
ATPR	Test Procedure		5104-0006
ATDS	Test Data Sheet		5108-0006

www.SteamPoweredRadio.Com

DWG. NO. 6601-3227 | SH 1/1 | REV. A

REVISIONS			
REV.	DESCRIPTION	DATE	APPROVED
A	REMOVED SK	10/19/79	

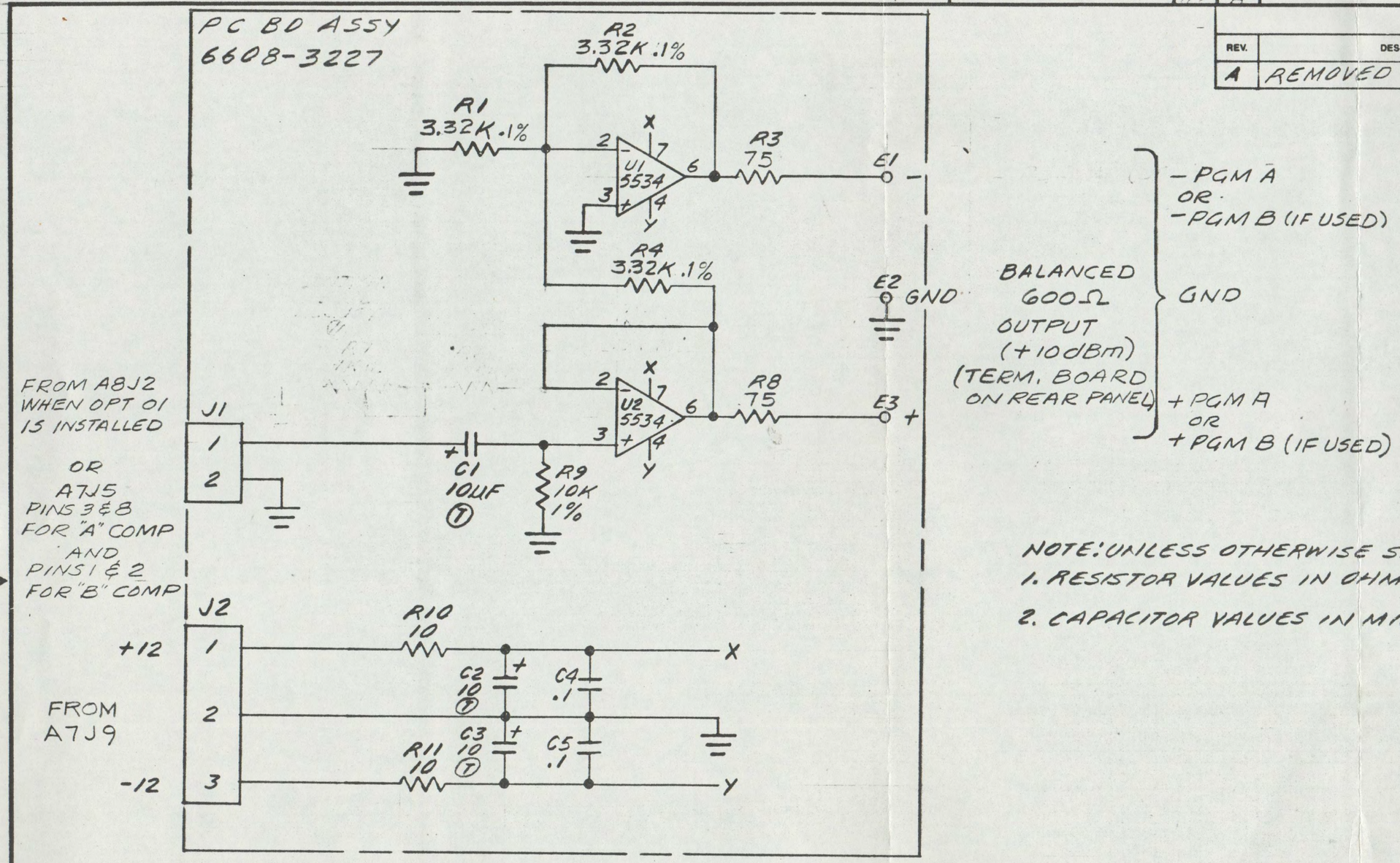

REF. DESIGNATION	
LAST USED	NOT USED
C5	
J2	
R11	R5, R6, R7
2	

NOTE: UNLESS OTHERWISE SPECIFIED;
1. RESISTOR VALUES IN OHMS ±5% 1/4 WATT
2. CAPACITOR VALUES IN MICROFARADS

QTY REQD	CODE IDENT	PART OR IDENTIFYING NO.	NOMENCLATURE OR DESCRIPTION	MATERIAL SPECIFICATION

PARTS LIST

6608-3227	OPTION -03 OF 7771
NEXT ASSY	USED ON
APPLICATION	

UNLESS OTHERWISE SPECIFIED DIMENSIONS ARE IN INCHES
TOLERANCES ARE:
FRACTIONS ± ___ DECIMALS .XX ± ___ .XXX ± ___ ANGLES ± ___
MATERIAL ___
FINISH ___
DO NOT SCALE DRAWING

APPROVALS		DATE
APPR		
PROJ ENG		7/20/79
DRAWN	KK	7/13/79
CHECKED		10/19/79
MFG		10/22/79
QA		10/22/79

MFM TIME & FREQUENCY TECHNOLOGY INC.

SCHEMATIC - 03 OPTION MODEL 7771
BALANCED 600Ω AUDIO OUTPUT

SIZE	FSCM NO.	DWG. NO.	REV.
B		6601-3227	A
SCALE NONE		SHEET 1 OF 1	

If You Didn't Get This From My Site,
Then It Was Stolen From...
www.SteamPoweredRadio.Com

BISHOP GRAPHICS/ACCUPRESS
REORDER NO. A-4105

DWG. NO. 6608-3227 | SH 1 | REV. A

REVISIONS			
REV.	DESCRIPTION	DATE	APPROVED
A	REL TO PROD	10-22-79	[illegible]

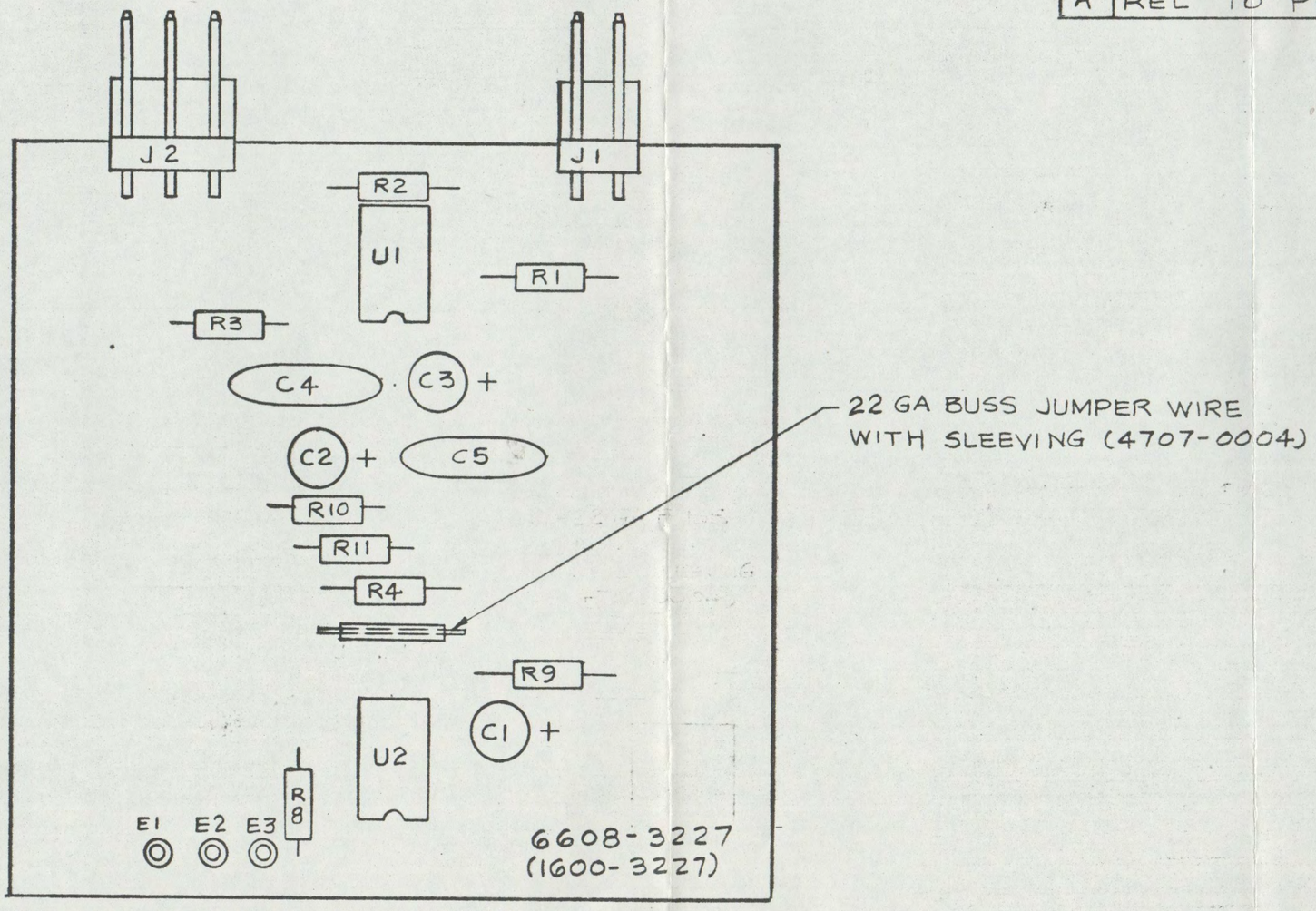

REF: SCHEMATIC 6601-3227

QTY REQD	CODE IDENT	PART OR IDENTIFYING NO.	NOMENCLATURE OR DESCRIPTION	MATERIAL SPECIFICATION

PARTS LIST

QTY	SYSTEM	DESCRIP.	NEXT ASSY	USED ON
2	E	DUAL CHANNEL	5102-3299	7771
1	D	DUAL MONO	5102-3299	7771
1	C	SINGLE MONO.	5102-3299	7771

APPLICATION

UNLESS OTHERWISE SPECIFIED DIMENSIONS ARE IN INCHES TOLERANCES ARE:
FRACTIONS ± ~ DECIMALS .XX ± ~ .XXX ± ~ ANGLES ± ~

MATERIAL ~

FINISH ~

DO NOT SCALE DRAWING

CONTRACT NO.

APPROVALS		DATE
DRAWN	M. Yee	10/22/79
CHECKED	K K	10/22/79
ISSUED	[illegible]	10/22/79
	[illegible]	10/22/79

TEL TIME & FREQUENCY TECHNOLOGY INC.

P.C BD ASSY, -03 OPTION FOR 7771
BALANCED 600Ω AUDIO OUTPUT

SIZE	FSCM NO.	DWG. NO.	REV.
B		6608-3227	A

SCALE 2/1 | SHEET 1 OF 1

If You Didn't Get This From My Site,
Then It Was Stolen From...
www.SteamPoweredRadio.Com

BISHOP GRAPHICS/ACCUPRESS
REORDER NO. A-4105

Model 7701 Balanced Audio Output (Option 03) Assy # 6608-3227
Rev A

CKT REF	DESCRIPTION	QTY	TFT STOCK NO.
C1	Cap Tan 10 MFD 20V 10%	1	1008-0100
C2	Cap Tan 10 MFD 20V 10%	1	1008-0100
C3	Cap Tan 10 MFD 20V 10%	1	1008-0100
C4	Cap Cer Disc .1 MFD 12V	1	1005-0100
C5	Cap Cer Disc .1 MFD 12V	1	1005-0100
J1	Conn 2 Pin Rt Angle FRLN	1	2250-6702
J2	Conn 3 Pin Rt Angle FRLN	1	2250-6703
R1	Res Mt Flm 1/8W .1% 3.32K	1	1058-3301
R2	Res Mt Flm 1/8W .1% 3.32K	1	1058-3301
R3	Res Car Comp 1/4W 5% 220	1	1065-0220
R4	Res Mt Flm 1/8W .1% 3.32K	1	1058-3301
R5	Not Used		
R6	Not Used		
R7	Not Used		
R8	Res Car Comp 1/4W 5% 220	1	1065-0220
R9	Res Mt Flm 1/8W 1% 10K	1	1061-1002
R10	Res Car Comp 1/4W 5% 10	1	1065-0010
R11	Res Car Comp 1/4W 5% 10	1	1065-0010
U1	I/C NE5534N	1	1100-5534
U2	I/C NE5534N	1	1100-5534
	Socket I/C 8 Pin	2	2250-1008
	P.C. BD. 7771 "03" Option	1	1600-3227

www.SteamPoweredRadio.Com