Instrument Serial No. ____
Manual Revision Level A

DIGITAL REMOTE CONTROL SYSTEM

MODELS 7610/ 7615/ 7630 MANUAL

USER MANUAL WIKI.COM

KCBS STUDIO COPY

Time and Frequency Technology, Inc.
3000 Olcott Street
Santa, Clara, CA 95051
408-~~246-6365~~
727-7272

If You Didn't Get This From My Site,
Then It Was Stolen From...
www.SteamPoweredRadio.Com

TABLE OF CONTENTS

			Page
SECTION 1	GENERAL INFORMATION		
	1.1	General Description	1-1
	1.1.1	Model 7610-Digital Telemetry/Control System	1-1
	1.1.2	Model 7615 Status Monitoring/Direct Control System	1-2
	1.1.3	Model 7630 Channel Expander	1-2
	1.2	Specifications	1-3
	1.3	Accessory Equipment	1-5
	1.4	Warranty	1-6
	1.5	Claim for Damage in Shipment	1-6
SECTION 2	INSTALLATION		
	2.1	Unpacking and Inspection	2-1
	2.2	Pre-Installation Checkout	2-1
	2.2.1	Interconnection Procedure	2-1
	2.2.2	System Checkout Procedure	2-2
	2.3	Installation and Connections	2-4
	2.3.1	Model 7610-C Rear Panel Connections	2-4
	2.3.2	Model 7610-R Rear Panel Connections	2-6
	2.3.3	Model 7615-C Rear Panel Connections	2-8
	2.3.4	Model 7615-R Rear Panel Connections	2-8
	2.3.5	Model 7630 Rear Panel Connections	2-10
	2.4	Field Installation of Options	2-11
	2.4.1	Model 7615	2-11
	2.4.2	Model 7630	2-11
	2.4.3	BCD Interface Card	2-11
	2.4.4	SCA Generator and Detector Card	2-12
	2.4.5	External Control and Site Select	2-12
	2.4.6	BCD Out	2-12
SECTION 3	OPERATION		
	3.1	General	3-1
	3.2	Turn-On and Warm-Up	3-1
	3.3	Controls, Connectors, and Indicators	3-1
	3.3.1	Model 7610-C Front Panel	3-1
	3.3.2	Model 7610-C Rear Panel	3-3
	3.3.3	Model 7610-R Front Panel	3-4
	3.3.4	Model 7610-R Rear Panel	3-5
	3.3.5	Model 7615-C Front Panel	3-8
	3.3.6	Model 7615-C Rear Panel	3-8
	3.3.7	Model 7615-R Front Panel	3-9
	3.3.8	Model 7615-R Rear Panel	3-10
	3.3.9	Model 7630 Front Panel	3-11
	3.3.10	Model 7630 Rear Panel	3-11
	3.4	Telemetry Data and Channel Display	3-12

www.SteamPoweredRadio.Com

SECTION 3 OPERATION (Continued)

3.5 Calibration of Telemetry Data Display..... 3-13
3.6 Failsafe Circuits..... 3-13
3.7 External BCD Data Input to 7610-R..... 3-13
3.8 Model 7615 Status Monitoring/Direct Control System..... 3-14
3.9 Model 7630 Channel Expander..... 3-14

SECTION 4 THEORY OF OPERATION

4.1 Block Diagram Discussion..... 4-1
4.1.1 7610-C Block Diagram..... 4-1
4.1.2 7610-R Block Diagram..... 4-4
4.1.3 7610 Communication Link..... 4-6
4.1.4 7615 Block Diagram..... 4-7
4.1.5 7630 Block Diagram..... 4-8
4.2 7610-C Mother Board..... 4-9
4.2.1 Transmit Circuits..... 4-9
4.2.2 Receive Circuits..... 4-10
4.2.3 Communication Link Switching..... 4-12
4.2.4 Power Supply..... 4-12
4.3 7610-C Display Board..... 4-12
4.4 7610-R Mother Board..... 4-13
4.4.1 Receive Circuits..... 4-13
4.4.2 Transmit Circuits..... 4-15
4.4.3 Communication Link Switching..... 4-16
4.4.4 Power Supply..... 4-16
4.5 7610-R Display Board..... 4-16
4.6 7610-R Relay and Barrier Strip Boards..... 4-17
4.7 7610-C FSK Modem..... 4-17
4.8 7610-R FSK Modem..... 4-17
4.9 SCA Generator and Detector Board..... 4-18
4.10 BCD Interface Board..... 4-18
4.11 7615-C Direct Control..... 4-18
4.12 7615-R Direct Control..... 4-19
4.13 7630 Channel Expansion..... 4-20

SECTION 5 MAINTENANCE

5.1 General..... 5-1
5.2 Periodic Mainteance..... 5-3
5.3 7610-C Calibration Procedures..... 5-3
5.3.1 UART Clock Frequency..... 5-3
5.3.2 TELCO Output Level..... 5-3
5.4 7610-R Calibration Procedures..... 5-3
5.4.1 UART Clock Frequency..... 5-3
5.4.2 ADC Clock Frequency..... 5-3
5.4.3 ADC Full-Scale Reading..... 5-3
5.4.4 Control Failsafe Delay..... 5-4
5.4.5 TELCO Output Level..... 5-4
5.5 FSK Modems..... 5-4
5.5.1 7610-C FSK Modems..... 5-4
5.5.2 7610-R FSK Modems..... 5-5

www.SteamPoweredRadio.Com

SECTION 5 MAINTENANCE (Continued)

5.6 SCA Generator and Detector..... 5-5
5.6.1 SCA Deviation..... 5-5
5.6.2 7610-C SCA Detector Frequency..... 5-6
5.6.3 7610-C SCA Generator Frequency and Output Level..... 5-6
5.6.4 7610-R SCA Detector Frequency..... 5-6
5.6.5 7610-R SCA Generator Frequency and Output Level..... 5-7
5.7 Troubleshooting..... 5-7

SECTION 6 DIAGRAMS

6-1 7610-C

6-1-1 Block Diagram
6-1-2 Wire Diagram
6-1-3 Mother Board
6-1-4 Display Board
6-1-5 FSK Modem
6-1-6 SCA Generator and Detector (7610-C/7610-R)

6-2 7610-R

6-2-1 Block Diagram
6-2-2 Wire Diagram
6-2-3 Mother Board
6-2-4 Display Board
6-2-5 Relay and Barrier Strip Boards (7610-R/7630)
6-2-6 BCD Interface Board
6-2-7 FSK Modem

6-3 Communication Link Block Diagram

6-4 7615-C

6-4-1 Block Diagram (7615-C/7615-R)
6-4-2 Wire Diagram
6-4-3 Mother Board
6-4-4 Front Panel Board
6-4-5 Power Supply Board (7615-C/7615-R)

6-5 7615-R

6-5-1 Wire Diagram
6-5-2 Mother Board
6-5-3 Front Panel Board

6-6 7630

6-6-1 Block Diagram
6-6-2 Wire Diagram
6-6-3 Relay Select

If You Didn't Get This From My Site,
Then It Was Stolen From...
www.SteamPoweredRadio.Com

SECTION 1

GENERAL INFORMATION

1.1 General Description.

The TFT Models 7610, 7615 and 7630 provide digital remote control of AM, FM, and TV transmitters. The basic component is the Model 7610 Digital Telemetry/Control System. Additional equipment includes the Model 7615 Status Monitoring/Direct Control System and the Model 7630 Channel Expander. These three models are described in Subsections 1.1.1 through 1.1.3.

Other options include an SCA Generator and Detector for use with radio or TV communications links; a BCD Card for external BCD data input; an External Control Interface for use when external equipment is to be connected to the Model 7610C to provide control commands; and an external telemetry BCD data output from the 7610C. These options can be ordered with the Model 7610, in which case they are installed at the factory; or they can be ordered later and installed by the customer in the field.

1.1.1 Model 7610 Digital Telemetry/Control System.

This system is the basic building block for remote control. It consists of a Model 7610-C unit for use at the control site, and a Model 7610-R unit for use at the remote site. The two units may be linked by telephone wire line (TELCO) or by STL microwave or radio (SCA). The system provides 10 channels of raise/lower or on/off control, and a display of telemetry from the remote site for each of the 10 channels. The Model 7610 alone is a complete remote-control system. However, its capabilities can be increased by use of other 7600 Series equipment described in Subsections 1.1.2 and 1.1.3.

Individual channels are selected by means of thumbwheel switches on the front panel of the 7610-C. Once selected, the channel number is sent to the 7610-R to select the channel at the remote point, and is then sent back to the control point and displayed on the front panel for verification. The system addresses this channel and displays the meter reading from the remote site on a front-panel 3 1/2 digit telemetry display on the 7610-C. Meter readings are updated three times per second.

Control commands are initiated by pushing either the UP/ON or DOWN/OFF button on the front panel. When a command is activated at the control point, a signal is fed back from the remote point. This signal verifies receipt of the command by illuminating the active command button. To ensure data accuracy and to reduce the possibility of operator error, each control command is sent twice. The two are then compared at the remote site, bit by bit. Only if they

www.SteamPoweredRadio.Com

1.1.1 Continued

match exactly are the commands carried out. For external control, a rear-panel connector on the 7610-C can be enabled by the front-panel EXTERNAL CONTROL switch. It allows external selection of channel number and command by a computer or other external device.

A control failsafe circuit in the 7610-R monitors reception of control and sync bits, and if these bits are not received for a period of 20 to 55 seconds (adjustable), contacts on a relay open to shut down the transmitter. These relay contacts are also opened by a power failure in the 7610-R.

A telemetry failsafe circuit in the 7610-C monitors the telemetry data from the 7610-R and produces a high-level TTL output when there is a downlink data failure lasting more than 7 to 12 seconds. This output lights an LED on the telemetry display on the 7610-C front panel, and also puts the failsafe bit sent up to the 7610-R at a high logic level.

The Model 7610-R has a front-panel DVM for telemetry readout, together with scaling potentiometers, so that one man can calibrate the system on-site. For such local operations, a switch on the 7610-R locks out control from the 7610-C control and overrides the telemetry and control failsafes. In local operation, the channel may be selected by thumbwheel switches on the 7610-R.

1.1.2 Model 7615 Status Monitoring/Direct Control System.

This system, which consists of a Model 7615-C for the control site and a Model 7615-R for the remote site, provides direct on/off control of up to 15 different functions, such as filament voltage, plate voltage, main power, overload reset, tower lights, and program source selection. This eliminates the necessity of dialing in the channels one at a time. On/off commands are normally inititated by toggle switches on the front panel of the 7615-C, but they can also be initiated by similar switches on the 7615-R for on-site local control.

The Model 7615 provides 15 status channels, each with its own independent LED indicator. The status indicators can also be used to verify on/off functions. Status outputs can be used to drive external devices and alarms.

For additional control, two Model 7615 pairs can be used simultaneously with one Model 7610 to provide 30 on/off control channels and 30 status monitoring channels.

1.1.3 Model 7630 Channel Expander. (Optional)

The Model 7630 is installed at the remote site to expand the up/down and telemetry functions of the Model 7610 from 10 to 30 channels.

www.SteamPoweredRadio.Com

1.1.3 Model 7630 Channel Expander. (Optional) (Continued)

Additional Model 7630's can be added to the Model 7610 to provide a total of 80 up/down and telemetry functions or channels.

1.2 Specifications.

System Capacity	a) Up to 80 channels of momentary up/down or on/off control with telemetry reading. 7610-R: 10 channels 7630: 20 channels each b) Up to 30 channels of direct on/off control and status display. 7615-C/R: 15 channels per pair.
TELEMETRY	
Accuracy	.1% of reading ±1 count.
Update	Three updates per second.
Analog Input Voltage (Tele +,-)	±1vdc. DVM is accurate to a count no greater than ±3100, equal to ±3.100VDC. (do not exceed ±4volts absolute maximum into A-D converter).
Input Common-Mode Voltage	±350vdc.
Input Impedance	50 kilohms.
Input Isolation	Optically isolated.
Control Outputs	
7610-R and 7630 (Up/on, down/off rear barrier strip)	Relay contact closure, isolated, AC/DC rated, noninductive load: 1A at 115vac or 2A at 26vdc.
7615-R Relay Outputs (Rear Panel)	0.5A at 115vac or 1A at 26vdc.
Data Transmission	Digital pulse-code-modulated FSK modems; 150-baud control, 300-baud telemetry.
Communication Link Requirements	
Telephone Line	Two-wire unconditioned, Series 3002 data circuit.

www.SteamPoweredRadio.Com

1.2 Continued.

Audio Channel	Any voice-grade channel having a bandwidth of 300Hz to 3kHz. Maximum attenuation of -30dB.
Radio (STL)	Plug-in FM subcarrier modulator and demodulator for command link.
Radio (off-air)	SCA frequencies. (Consult factory)
SCA/Subcarrier Modulator Output	Adjustable 0-800mV rms.
SCA/Subcarrier Demodulator Input Range	20mV to 700mV rms
Fail-Safe Provisions	
Uplink Control (7610-R)	Normally closed relay contacts rated (noninductive load) for 0.5A at 115vac or 1A at 26vdc. Adjustable delay of approximately 20 to 55 seconds.
Downlink Telemetry (7610-R)	10-second nominal delay. Output for driving external one-hour timer and TV fail-safe units for full compliance with FCC Rule 73.676.
Downlink Telemetry (7610-C)	Front panel red LED. 10-second nominal delay. Rear panel TTL output.
Local Mode Indication (7610-R Rear Panel)	Relay contact closure. Contacts rated (noninductive load) for 0.5A at 115vac or 1A at 26vdc.
Model 7615 Inputs and Outputs	
Control Input Requirements (7615-C rear panel)	Dry contact closure or TTL logic zero. (Alternative to 7615-C front panel switches.)
Status Output (7615-C rear panel)	TTL levels; low level indicates active LED.
Status Input (7615-R rear panel)	Dry contact closure or TTL logic zero.
Local Warning (7615-R rear panel)	Switch contact closure. Contact rated for 2A noninductive load.

www.SteamPoweredRadio.Com

1.2 Continued.

Power Required	
Model 7610-C	115VAC ±10%, 50 to 400Hz, 15 watts maximum.
Model 7610-R	115VAC ±10%, 50 to 400Hz, 25 watts maximum.
Model 7615 (each of two units)	115VAC ±10%, 50 to 400Hz, 10 watts maximum.
Model 7630	From Model 7610.
Operating Temperature	0° to 50° C.
Mounting	19-inch rack.
Height and Weight	
Model 7610-C	3-1/2 inches, 12 pounds.
Model 7610-R	5-1/4 inches, 16 pounds.
Model 7615 (each of two units)	3-1/2 inches, 11 pounds.
Model 7630	5-1/4 inches, 14 pounds.
Site Select Input (7610-C)	4-Bit TTL input level (true data).
External Control Input (7610-C)	TTL input levels (non-true data).
External BCD Telemetry Data Output (7610-C) (Available as option on Serial No. 225-3 and thereafter)	TTL output levels with latch pulse (true data).
External BCD Channel Input Data (7610_R) (CH 8 and/or CH9)	TTL level inputs (true data).

1.3 Accessory Equipment.

Various adapters may be purchased from Time and Frequency Technology, Inc. These accessories provide the conversion and proper DC voltage level output for the telemetry monitoring input connections to the 7610-R and 7630 (s).

www.SteamPoweredRadio.Com

1.4 Warranty

TIME & FREQUENCY TECHNOLOGY, INC., warrants each of the instruments of its manufacture to be produced to meet the specifications delivered to the BUYER; and to be free from defects in material and workmanship and will repair or replace, at its expense, for a period of one year from the date of delivery of equipment, any parts which are defective from faulty material or poor workmanship.

Instruments found to be defective during the warranty period shall be returned to the factory with transportation charges prepaid by BUYER. It is expressly agreed that replacement and repair shall be the sole remedy of BUYER with respect to any nonconforming equipment and parts thereof and shall be in lieu of any other remedy available by applicable law. All returns to the factory must be authorized by the SELLER, prior to such returns. Upon examination by the factory, if the instrument is found to be defective, the unit will be repaired and returned to the BUYER, with transportation charges prepaid by SELLER.

Transportation charges for instruments found to be defective within the first thirty (30) days of the warranty period will be paid both ways by the SELLER.

Transportation charges for warranty returns, wherein failure is found not to be the fault of the SELLER, shall be paid both ways by the BUYER.

This warranty does not apply to instruments which, in the opinion of the SELLER, have been altered or misused.

NO OTHER WARRANTY IS EXPRESSED OR IMPLIED. TFT IS NOT LIABLE FOR CONSEQUENTIAL DAMAGES.

1.5 Claim for Damage in Shipment.

Your instrument should be inspected and tested as soon as it is received. The instrument is insured for safe delivery. If the instrument is damaged in any way or fails to operate properly, file a claim with the carrier, or if insured separately, with the insurance company.

WE SINCERELY PLEDGE OUR IMMEDIATE AND FULLEST COOPERATION TO ALL USERS OF OUR PRECISION ELECTRONIC INSTRUMENTS.

PLEASE ADVISE US IF WE CAN ASSIST YOU IN ANY MANNER

Time & Frequency Technology, Inc.
3000 Olcott Street
Santa Clara, CA. 95051

408-246-6365

If You Didn't Get This From My Site,
Then It Was Stolen From...
www.SteamPoweredRadio.Com

SECTION 2

INSTALLATION

2.1 Unpacking and Inspection.

Upon receiving the equipment, inspect the packing box and equipment for signs of possible shipping damage. After installing the equipment as described in this section, operate it in accordance with the procedure of Section 3. If the equipment is damaged or fails to operate properly, file a claim with the transportation company, or with the insurance company if insured separately.

Models 7610 and 7615 require a prime power source of 117 vac, 50 to 400Hz. They can also be wired for 230vac operation on special order. Power required for each model is as follows:

Model	Power
7610 C	15 W
7610 R	25 W
7615 C and 7615 R	10 W each unit

Model 7630 derives its power from the Model 7610.

2.2 Pre-Installation Checkout.

To ensure that the Model 7610 is completely functional when it is received, the following closed-loop checkout should be performed before installation. The 7610-C and 7610-R are interconnected to simulate actual installation.

2.2.1 Interconnection Procedure.

For telephone wireline (TELCO) operation, connect a twisted-wire pair between the rear panel TELCO terminals on the 7610-C and the rear panel TELCO terminals on the 7610-R.

For microwave (STL) uplink operation and FM radio (SCA) downlink operation, proceed as follows:

a. Connect the SUBCARRIER CONTROL OUT connector on the 7610-C to SUBCARRIER CONTROL IN connector on the 7610-R.

b. Connect the SUBCARRIER TELEMETRY IN connector on the 7610-C the SUBCARRIER TELEMETRY OUT connector on the 7610-R.

www.SteamPoweredRadio.Com

2.2.1 Interconnection Procedure. (Continued)

NOTE

The communication link (both up and down) requires an SCA generator (modulator) and a corresponding SCA detector (demodulator), either included in the 7610-C/R or external to the 7610-C/R.

2.2.2 System Checkout Procedure.

2.2.2.1 Model 7610-C.

a. The EXTERNAL CONTROL switch on the front panel must be in the OFF position, and the 7610-R LOCAL MODE switch must not be activated.

b. Using the 7610-C CHANNEL SELECT thumbwheel switches, dial in channels 00 through 09. The channel selected should be indicated in the CHANNEL VERIFICATION window, and the TELEMETRY DATA display should read 0000 ±0002. As each of the channels is selected, the corresponding relay in the Model 7610-R should be heard energizing. Audibly verify relay operation for all 10 channels.

c. UP/ON and DOWN/OFF Control.

(1) Depress the 7610-C UP/ON button. Verify that the UP/ON pushbuttons on both the 7610-C and the 7610-R light. Release the button.

(2) Depress the DOWN/OFF button. Verify that the DOWN/OFF pushbuttons on both the 7610-C and 7610-R light. Release the button.

(3) Simultaneously depress the UP/ON and DOWN/OFF pushbuttons on the 7610-C. Verify that no buttons light on either the 7610-C or 7610-R.

2.2.2.2 Model 7610-R.

a. With the LOCAL MODE switch not activated, verify that the 7610-R UP and DOWN control switches have no effect when depressed and do not light. Also, verify that the 7610-R TELEMETRY DATA display is inactive (blank) except for the polarity ± indication.

b. Local Control

(1) Depress the LOCAL MODE switch. Verify that the switch lights and that the 7610-R TELEMETRY DATA readout indicates 0000 ±2.

www.SteamPoweredRadio.Com

2.2.2.2 Model 7610-R. (Continued)

(2) The 7610-C should indicate the same channel selected on the 7610-R and also the same data (0000). Verify by selecting channels 00 through 09 on the 7610-R.

(3) Alternately depress the UP/ON and DOWN/OFF switches on the 7610-C and verify that they have no control of the 7610-R.

c. UP/ON and DOWN/OFF Control.

(1) Depress the 7610-R UP/ON button. Verify that the UP/ON pushbuttons on both the 7610-C and 7610-R Light. Release the UP/ON button.

(2) Depress the 7610-R DOWN/OFF button. Verify that the DOWN/OFF pushbuttons on both the 7610-C and 7610-R light. Release the DOWN/OFF button.

(3) Simultaneously depress both the UP/ON and DOWN/OFF pushbuttons on the 7610-R. Verify that no UP or DOWN pushbuttons light on either the 7610-C or 7610-R.

d. Control Failsafe.

(1) Place an ohmmeter across the CONTL FAILSAFE terminals on the 7610-R rear panel connector J17. It should read less than 1 ohm.

(2) Remove AC power to the Model 7610-C. After a time delay of 20 to 55 seconds (adjustable), the relay contacts should open and the ohmmeter reading should go to infinity.

e. Telemetering Calibration.

(1) Connect an external DC voltage source (not to exceed ±3.00vdc) to the TELE + and - terminals for channel 00 on the 7610-R rear panel. Adjust the front panel calibration potentiometer for channel 0 fully clockwise.

(2) With the LOCAL MODE button depressed, select channel 00 and verify that a reading corresponding to this input voltage is indicated on the display. Adjust the front panel calibration potentiometer counterclockwise for this channel and verify that the readout changes on both the 7610-R and 7610-C.

www.SteamPoweredRadio.Com

2.2.2.2 Model 7610-R. (Continued)

(3) Repeat steps (1) and (2) for the nine remaining channels, if desired.

2.2.2.3 Phone Line Loss.

If a wire or phone line link is to be used between the 7610-C and 7610-R, insert a 30-dB, 600-ohm attenuator between the two units, using the resistors supplied. Repeat the steps under the 7610-C system checkout procedure.

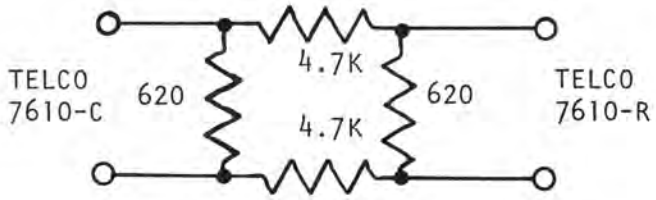

2.3 Installation and Connections.

The 7610 C/R, 7615 C/R and 7630 units are designed for installation in a standard 19-inch relay rack. Required connections to the units are given below.

2.3.1 Model 7610-C Rear Panel Connections. (Figure 3-2)

a. When a TELCO communication link is to be used, connect the TELCO line to the TELCO terminals on terminal strip J12.

b. When a radio microwave uplink is to be used, connect CONTROL OUT connector J13 to the station's SCA generator. If there is no SCA Generator at the station, the optional SCA Generator/Detector Card must be installed in the 7610-C; then the CONTROL OUT connector is connected directly to the multiplex input of the station's STL transmitter (see Figure 6-3). The output level of the SCA generator within the 7610-C should be adjusted by adjusting R2 of the SCA generator - detector board to the level required by the STL transmitter.

c. When a radio or TV SCA communication downlink is to be used, connect TELEMETRY IN connector J14 to the station's SCA Monitor output. If there is no station SCA Monitor, the optional SCA Generator/Detector Card must be installed in the 7610-C; then the TELEMETRY IN connector is connected directly to the composite, or SCA subcarrier output of the station's FM or TV receiver (see Figure 6-3).

NOTE

Depending on communication link options, verify that the internal DIP switch S1 on the 7610-C mother board is setup per Table 2-1.

www.SteamPoweredRadio.Com

Table 2-1. Model 7610 Communication Interface Selections

DIP Switch S1 position on 7610-C Mother Board	TELCO (NO SCA)	SCA GEN & DET	SCA GEN (NO DET)	SCA DET (NO GEN)	
1	OFF	OFF	OFF	ON	
2	OFF	ON	OFF	ON	
3	OFF	ON	OFF	ON	
4	ON	OFF	OFF	OFF	
5	ON	ON	ON	ON	ON
6	ON	ON	ON	ON	ON
7	OFF	ON	ON	OFF	
8	OFF	OFF	ON	OFF	ON

FOR OTHER COMBINATIONS CONSULT FACTORY

DIP Switch S1 position on 7610-R Mother Board	TELCO (NO SCA)	SCA GEN & DET	SCA DET (NO GEN)	
1	OFF	OFF	OFF	
2	ON	ON	ON	ON
3	OFF	ON	OFF	
4	OFF	OFF	ON	
5	OFF	ON	OFF	
6	ON	OFF	ON	
7	OFF	ON	ON	ON

FOR OTHER COMBINATIONS CONSULT FACTORY

NOTE: All of the above configurations require a complete FSK Modem board in the 7610-C and 7610-R.

www.SteamPoweredRadio.Com

2.3.1 Model 7610-C Rear Panel Connections. (Figure 3-2) Continued

d. For a visual or aural indication of downlink data failure at the control site, connect an appropriate device to the TELE FAIL terminal of terminal strip J12. These terminals provide a high-level TTL output when a downlink failure lasts more than 7 to 12 seconds.

e. If multiple remote transmitters are to be controlled, connect a cable from SITE SELECT connector J16 to the remote site select box.

f. If external control of CHANNEL SELECT and UP/DOWN functions are to be used, connect them to EXTERNAL CONTROL connector J17.

g. If external BCD output from the 7610-C is to be used, connection for the output shall be made to J19.

h. If one or two optional Model 7615's are to be used, connect them to 7615 STATUS/CONTROL connector J18.

i. If External FSK data received on the telemetry downlink is used for external monitoring, make connections to EXTERNAL DATA OUT, J15.

2.3.2 Model 7610-R Rear Panel Connections. (Figure 3-4)

a. When a TELCO communication link is to be used, connect the TELCO line to the TELCO terminals on terminal strip J17.

b. When a radio microwave uplink is to be used, connect CONTROL IN connector J18 to the multiplex output of the STL receiver at the remote site.

c. When a radio or TV SCA subcarrier downlink is to be used, connect TELEMETRY OUT CONNECTOR J19 to the SCA modulation input of the FM or TV transmitter. The output level of the SCA generator within the 7610-R should be adjusted by adjusting R2 of the SCA generator detector board to the level required by the radio or TV transmitter.

NOTE

Depending on communication link options, verify that the interval DIP switch S1 on the 7610-R mother board is setup per Table 2-1.

d. Connect the LOCAL MODE terminals of terminal strip J17 to an appropriate device to indicate remote-site local-mode operation. These terminals provide a relay contact closure during local-mode operation. Relay contacts are rated for 0.5A at 115vac or 1A at 26vdc.

www.SteamPoweredRadio.Com

e. Connect an appropriate device to the CONTL FAILSAFE terminals of terminal strip J17 to remove power to the transmitter during uplink failure or local power failure. These terminals provide a relay contact closure during normal operation, and a contact opening for uplink failure or power failure. Relay contacts are rated for 0.5 A at 115vac or 1A at 26vdc.

f. To provide an indication at the remote site of downlink telemetry failure, connect an appropriate device to the TELE FAILSAFE terminals of terminal strip J17. These terminals supply a 12volt relay energizing voltage when there is a downlink failure. Current is limited by a 100-ohm resistor.

g. On the 7610-R front panel, turn the channel calibration potentiometers (Reference 1 in Figure 3-3) fully counterclockwise if the DC input voltage is to exceed 4 volts. Connect each of the telemetry monitoring points through an appropriate interface to provide a low level DC signal to the pair of terminals on the TELE-/+ terminal strip corresponding to the desired channel. When the input polarity is the same as that marked on the TELE connector, the TELEMETRY DATA display will be preceded by a +; otherwise, the display will be preceded by a -. The input line can float at a voltage of up to ± 350volts with respect to ground, but the voltage across any pair of TELE-/+ terminals must be such that the voltage out of the calibration potentiometer does not exceed 4 volts DC. Calibration of the individual channels is covered in Section 3.5.

h. Connect each pair of terminals (A-B) on the UP terminal strip to an appropriate device for turning on a piece of equipment or increasing the value of a quantity. The relay contact closure from A to B for each channel is rated at 115vac, 1A or 2A at 26vdc.

i. Connect each pair of terminals (A-B) on the DOWN terminal strip to an appropriate device for turning off a piece of equipment or decreasing the value of a quantity. The relay contact closure from A to B for each channel is rated at 115vac, 1A or 2A at 26vdc.

j. If the external BCD input option is installed, connect the input into the BCD CH9 connector. If additional input is required, use both the BCD CH9 and the BCD CH8 connectors.

k. When one or two optional Model 7615-R's are to be used, connect them to the 7615 connector, J21.

l. If one or more optional Model 7630's are to be used, connect them to the 7630 connector, J23.

m. If the optional analog scanner is to be used, connect the input from the external monitoring device to the EXT TELE SEL IN connector, J22.

If You Didn't Get This From My Site,
Then It Was Stolen From...
www.SteamPoweredRadio.Com

2.3.2 Model 7610-R Rear Panel Connections. (Figure 3-4) Continued

n. If the optional analog scanner and 7630 (s) are to be used in conjunction with an external monitoring device, connect a cable from the EXT TELE SEL OUT connector J24 to the Model 7630 (s).

o. If external FSK data is to be sent with the 7610-R FSK data on the downlink, connect the external FSK data source to the EXT DATA IN connector, J20.

2.3.3 Model 7615-C Rear Panel Connections. (Figure 3-6)

a. If desired, connect the terminal pairs on the STATUS barrier strips J6 and J7, to external indicators to duplicate the front panel indicators. A low level at these terminals corresponds to a lighted front panel indicator.

b. If desired, connect the terminal pairs on the CONTROL barrier strips J4 and J5 to external switches to duplicate (or provide alternatives for) the front panel switches.

c. Connect cables from J1 and J2 as shown in Figure 2-1.

d. depending on whether the 7615-C is the first or second 7615-C, the internal slide switch on the 7615-C mother board should be set to Pos 1 or Pos 2 (see component layout diagram).

2.3.4 Model 7615-R Rear Panel Connections. (Figure 3-8)

a. Connect the terminal pairs on the STATUS barrier strips, J6 and J7 to the desired sensors. Inputs must be either a contact closure or a TTL level signal.

b. Connect the terminal pairs on the CONTROL barrier strips to the devices to be controlled. Each pair of terminals is connected internally to isolated relay contacts rated at 0.5A at 115vac or 1A at 26vdc.

c. Connect cables from J1 and J2 as shown in Figure 2-1.

d. If desired, connect the LOCAL WARN terminals to a warning device. The terminals provide contact closure when the 7615-R is in local mode. Contacts are rated for a 2 Amp noninductive load.

e. Depending on whether the 7615-R is the first or second 7615-R, the internal slide switch on the 7615-R mother board should be correspondingly set to Pos 1 or Pos 2.

www.SteamPoweredRadio.Com

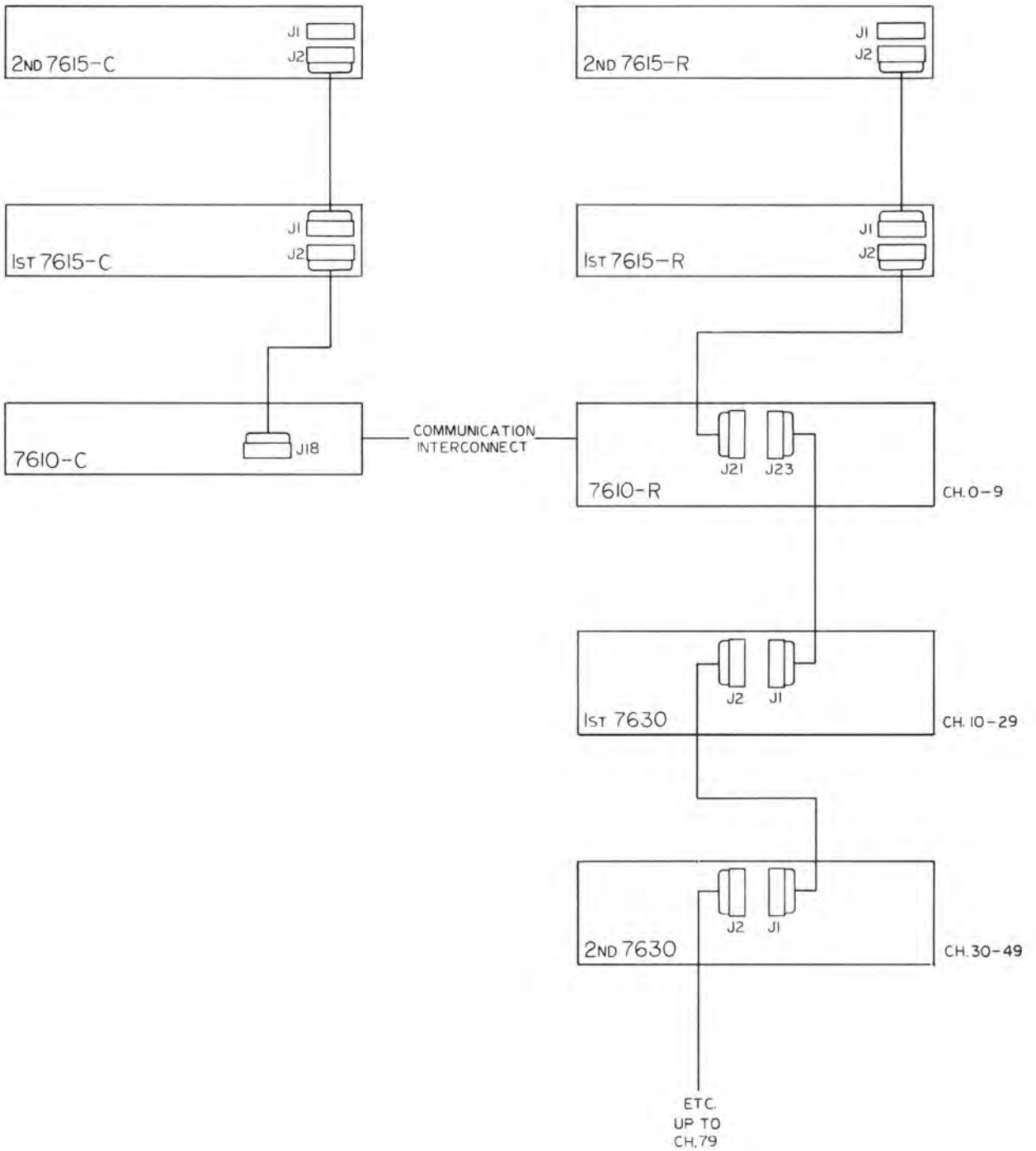

FIGURE 2-1 MODEL 7610, 7615, 7630 INTERCONNECTIONS

www.SteamPoweredRadio.Com

2.3.5 Model 7630 Rear Panel Connections. (Figure 3-10)

a. On the 7630 front panel, turn all of the channel calibration potentiometers fully counterclockwise if the DC input voltage is to exceed 4 volts. Connect each of the telemetry monitoring points through an appropriate interface to provide a low-level DC signal to the pair of terminals on the TELE -/+ terminal strip corresponding to the desired channel. When the input polarity is the same as that marked on the TELE connector, the TELEMETRY DATA display will be preceded by a +; otherwise, the display will be preceded by a -. The input line can float at a voltage of up to ±350volts with respect to ground, but the voltage across any pair of TELE -/+ terminals must be such that the voltage out of the calibration potentiometer does not exceed 4 volts DC. Calibration of the individual channels is covered in Section 3.5.

b. Connect each pair of terminals (A-B) on the UP terminal strip to an appropriate device for turning on a piece of equipment or increasing the value of a quantity. The relay contact closure from A to B for each channel is rated at 1A at 115vac or 2A at 26vdc.

c. Connect each pair of terminals (A-B) on the DOWN terminal strip to an appropriate device for turning off a piece of equipment or decreasing the value of the quantity. The relay contact closure from A to B for each channel is rated ot 1A at 115vac or 2A at 26vdc.

d. Connect cables from J1 and J2 as shown in Figure 2-1.

e. Connections J3 and J4 are reserved for an optional external monitoring scanner device.

f. For each 7630 installed, control and monitoring functions are assigned to each channel. One switch in each of the two internal DIP switch assemblies (S1 and S2) must be closed in accordance with the following tabulation:

	S2 Switch Position Closed	S1 Switch Position Closed
First 7630	1 (CH10-19)	2 (CH20-24)
Second 7630	3 (CH30-39)	4 (CH40-49)
Third 7630	5 (CH50-59)	6 (CH60-69)
Fourth 7630	7 (CH70-79)	-

NOTE

Other switch positions should remain in the off position.

www.SteamPoweredRadio.Com

2.4 Field Installation of Options.

2.4.1 Model 7615.

When a 7615 is to be added to a 7610 in the field, an internal cable (furnished with the 7615) must be connected from J8 on the 7610-C mother board to connector J18 on the 7610-C rear panel. Likewise an internal cable (furnished) must be connected in the 7610-R from J2 on the mother board to J21 on the rear panel. External cables (furnished) must also be connected between the 7610-C and 7615-C, and between the 7610-R and the 7615-R as shown in Figure 2-1.

When a second 7615-C is installed, an internal cable (furnished) must be connected from J1 on the mother board of the first 7615-C to J1 on its rear panel. Likewise, when a second 7615-R is installed, an internal cable (furnished) must be installed from J1 on the mother board of the first 7615-R to J1 on its rear panel. External cables (furnished) must be connected between the 7615-Cs and between the 7615-Rs as shown in Figure 2-1.

In the 7615-C, internal switch S1 must be set to Pos 1 if the 7615-C connects directly to the 7610-C. If the 7615-C connects to a previously installed 7615-C, S1 should be set to Pos 2. Switch S1 in the 7615-R should be set similarly.

2.4.2 Model 7630.

When a 7630 is to be added to a 7610 system in the field, an internal cable (furnished with the 7630) must be connected from J3 on the 7610-R mother board to J23 on the 7610-R rear panel. External cables (furnished) must be connected between the 7610-R and the 7630 as shown in Figure 2-1.

When a second 7630 is installed, an internal cable (furnished) must be connected from J3 on the mother board of the first 7630 to J2 on its rear panel. If additional 7630s are installed, this internal cable must be connected in the next lower 7630. External cables (furnished) must be connected between the 7630s as shown in Figure 2-1.

The internal DIP switches must be set in each 7630 as described in Section 2.3.5.

2.4.3 BCD Interface Card.

To install the BCD Interface Card, a card guide pair (furnished) must first be mounted on the 7610-R mother board. The guides are installed using four screws on each side. Then the BCD Interface Card is plugged into J7-1 and J7-2. If the one-channel BCD option is ordered, a cable is furnished which connects to J16 on the 7610-R rear panel. IF the two-channel BCD option is ordered, two cables are furnished, one of which goes to rear panel connector J16 and the other to rear panel connector J15. External cabling is not furnished.

www.SteamPoweredRadio.Com

2.4.4 SCA Generator and Detector Card.

In the 7610-C, the SCA Generator and/or Detector (1 card) is mounted on top of the FSK Modem card, using spacers furnished. A cable (furnished) connects the card with J3 on the 7610-C Mother Board. Two BNC connectors (furnished) must be mounted in the CONTROL OUT and TELEMETRY IN locations on the 7610-C rear panel. The wires, in the bundle from J5 (see Figure 6-1-3), must be soldered to the BNC connectors.

To install the SCA Generator and/or Detector (1 card) in the 7610-R, a card guide pair (furnished) must first be mounted on the 7610-R Mother Board. The guides are installed using four screws on each side. Then the SCA Card is plugged into J9 on the Mother Board. Two BNC connectors (furnished) must be mounted in the TELEMETRY OUT and CONTROL IN locations on the 7610-R rear panel. The wires, in the bundle from J11 (see Figure 6-2-3) must be soldered to the BNC connectors.

The DIP switches on the 7610-C and 7610-R Mother Boards must be set in accordance with Table 2-1.

2.4.5 External Control and Site Select.

If either of these options is selected, the appropriate internal cable will be furnished to connect from the Mother Board connector to the rear panel connectors on the 7610-C. If the site select option is to be used, the site ident jumpers associated with U35 on the 7610-R Mother Board must be connected appropriately. External cabling is not furnished.

It is recommended that TFT be contacted for assistance in planning multisite installations.

2.4.6 BCD Out.

When this option is ordered, a cable (furnished) must be connected from the 7610-C Display Board, J3 to the rear panel BCD OUTPUT connector, J19.

External cabling is not furnished.

If You Didn't Get This From My Site,
Then It Was Stolen From...
www.SteamPoweredRadio.Com

SECTION 3

OPERATION

3.1 General.

The Model 7610 provides a means of controlling a remote transmitter and of displaying telemetry from the remote transmitter indicating the status of important operational parameters. By means of front-panel thumbwheel and pushbutton switches, the operator can control ten different up/down or on/off functions at the remote site. A front-panel display verifies that the channel selected at the control site has also been selected at the remote site; and the value of the parameter measured at the remote site on the selected channel is also displayed on the front panel. An LED in the display lights when there is a failure in the telemetry down link between the remote and control sites.

At the remote site, thumbwheel and pushbutton switches permit controlling the transmitter locally for calibration of telemetry analog voltages or other purposes. Parameter measurements can be displayed here in the same way that they are displayed at the control site.

Optional Model 7615 units at the control and remote sites enable the operator to directly control up to 15 different functions (30 functions for two units at each site). An optional Model 7630 at the remote site expands the up/down and telemetry functions of the Model 7610 to 30 channels (80 channels maximum).

3.2 Turn-On and Warm-Up.

The 7610 and 7615 units do not contain an on-off power switch. They are on whenever their AC power cords are plugged into an appropriate source. The Model 7630 (s) derives its power from the Model 7610-R, and so is on whenever the 7610-R is plugged into a power source.

Since all units are of solid-state design, no warmup is required.

3.3 Controls, Connectors, and Indicators.

3.3.1 Model 7610-C Front Panel.

Fig. 3-1 Ref. No.	Name	Function
1	CHANNEL VERIFICATION display	When the channel set up on the 7610-C CHANNEL SELECT switch (or, in the local mode, on the 7610-R CHANNEL SELECT switch) has been switched

www.SteamPoweredRadio.Com

3.3.1 Continued.

Fig. 3-1 Ref. No.	Name	Function
1	CHANNEL VERIFICATION display (Con't)	in at the remote site, the 7610-R transmits the channel number back to the 7610-C, where it is displayed on the CHANNEL VERIFICATION display.
2	Telemetry failure LED	This red LED lights if there is a downlink data failure lasting more than 7 to 12 seconds.
3	TELEMETRY DATA display	This 3 1/2-digit display indicates the value of the parameter being measured on the selected channel. A + or - before the displayed number indicates polarity. A reading of 1000 corresponds to 1.000 volt into the DVM out of the calibration potentiometer (At 7610-R).
4	CHANNEL SELECT thumbwheel switches	Permits selection of the desired channel for control.
5	EXTERNAL CONTROL paddle switch	In the OFF position, the 7610-C front-panel switches control the remote equipment. In the ON position, the front-panel switches have no effect, and control is by means of devices connected to the rear-panel EXTERNAL CONTROL connector J17.
6	UP/ON pushbutton switch	When depressed, this switch transmits an UP or ON command to the remote device controlled by the selected channel. The switch lights to verify that the command has been received at the remote point.
7	DOWN/OFF pushbutton switch	When depressed, this switch transmits a DOWN or OFF command to the remote device controlled by the selected channel. The switch lights to verify that the command has been received at the remote point.

www.SteamPoweredRadio.Com

3.3.1 Continued.

Fig. 3-1 Ref. No.	Name	Function
8	Tray	The card in this tray provides identification of the assigned function and units for each channel.

3.3.2 Model 7610-C Rear Panel.

Fig. 3-2 Ref. No.	Name	Function
1	AC fuse	Fuses AC input to power transformer.
2	TELCO fuse	Fuses TELCO telephone line.
3	SUBCARRIER CONTROL OUT connector J13 (Option)	SCA or FSK output for STL microwave uplink.
4	SUBCARRIER TELEMETRY IN connector J14 (Option)	SCA or FSK telemetry input connector for radio or TV downlink.
5	EXT DATA OUT connector J15 (Option)	Auxiliary FSK output, for use when a second frequency is used on the TELCO downlink.
6	SITE SELECT connector J16 (Option)	When installed, is used for multisite selection.
7	EXTERNAL CONTROL connector J17 (Option)	When installed, is used in conjunction with the EXTERNAL CONTROL switch for control of uplink.
8	7615 STATUS/CONTROL connector J18 (Option)	When installed, provides means of connecting to optional 7615-C.
9	Terminal strip J12	TELCO: Provides bidirectional TELCO connection through a 600-ohm transformer. TELE FAIL: Provides a high-level TTL output when there is a downlink data failure lasting more than 7 to 12 seconds.

www.SteamPoweredRadio.Com

3.3.2 Continued.

Fig. 3-2 Ref. No.	Name	Function
10	115 VAC POWER cord	Provides connections to a prime power source (115 VAC unless otherwise specified).
11	RECEIVE LEVEL pin jacks	Provides a test voltage proportional to the received signal level thru the FSK modem detector filters.
12	BCD OUT connector J19	Provides the same BCD data that drives the 7610-C display, for driving an external device.
13	Grounding bolt (Serial #225-3 and later units only)	Provides a means of connecting chassis ground.

3.3.3 Model 7610-R Front Panel.

Fig. 3-3 Ref. No.	Name	Function
1	Calibration or scaling potentiometers	Used to calibrate the analog telemetry voltages received through the rear-panel barrier strip of the 7610-R for readout by the TELEMETRY DATA display DVM. Each channel has its own calibration potentiometer.
2	Channel identification card	Removable card provides identification of the assigned function and units for each channel.
3	TELEMETRY DATA display	This 3 1/2-digit display indicates the value of the parameter being measured on the selected channel. A + or - before the displayed number indicates polarity. A reading of 1000 corresponds to 1.000 volt into the DVM out of the calibration potentiometers. Channel selection is by the 7610-R CHANNEL SELECT thumbwheel switches, in the local mode. When not in the local mode, the TELEMETRY DATA display is blanked out.

www.SteamPoweredRadio.Com

NEXT ASSY	USED ON
5004-7610	7610

REVISIONS

SYM	DESCRIPTION	DR	CHK	AUTH	DATE
A		TD			3-4-77

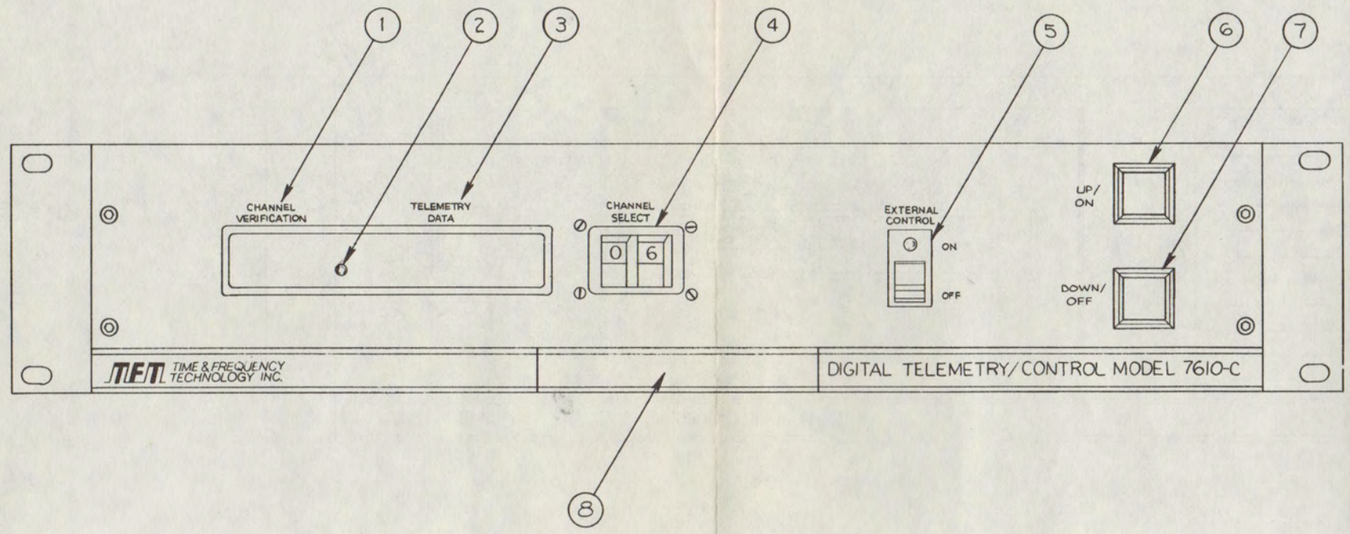

FIGURE 3-1

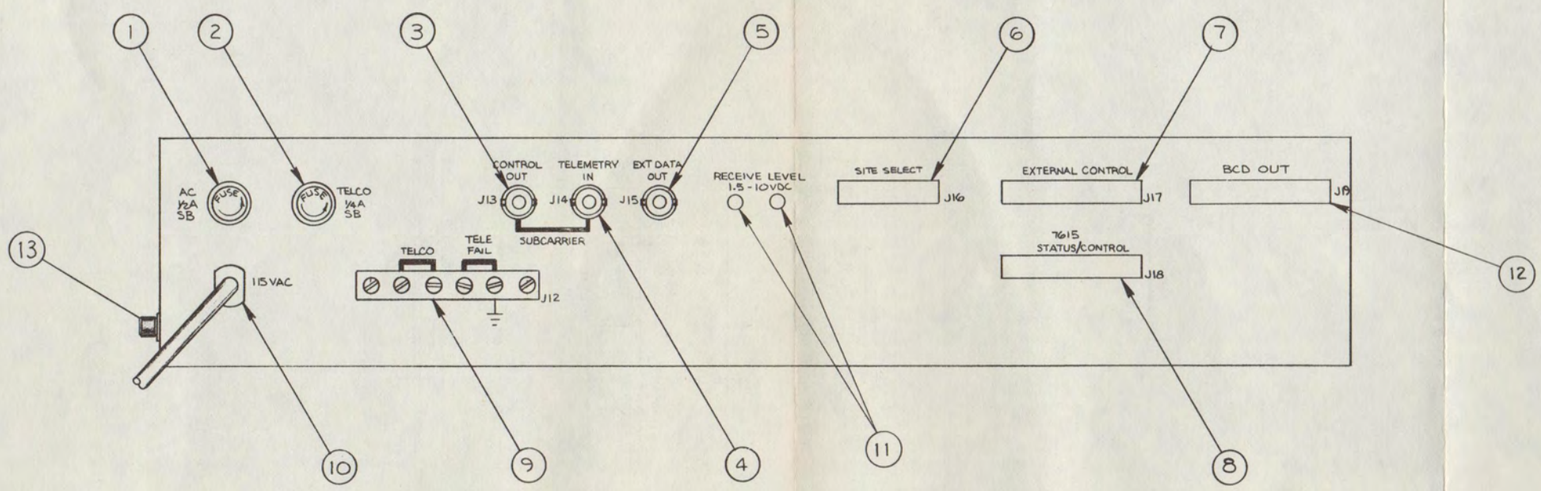

FIGURE 3-2

ITEM NO.	EN NO.	PART NO.	DESCRIPTION	REF. DES.	QTY PER ASSY

LIST OF MATERIALS

REMOVE ALL BURRS AND SHARP EDGES

TOLERANCES UNLESS OTHERWISE SPECIFIED
.XX ± ANGULAR
.XXX ± ±

DO NOT SCALE THIS PRINT

		DATE
DRAWN BY		3-4-77
CHK. BY		6/4/77
PROJ. ENG.		6/7/77
MFG. ENG.		
APPD.		
APPD.		
ECO NO.		

TIME & FREQUENCY TECHNOLOGY INC.
3000 Olcott St., Santa Clara, California 95050
(408) 246-8365

TITLE
FRONT & REAR PANEL
MODEL 7610-C

SIZE D | DRAWING NO. 6600-1210 | REV. A

SCALE 1/1 | SHT. 1 OF 1

DWG. NO.

www.SteamPoweredRadio.Com

NEXT ASSY	USED ON
5004-7610	7610

REVISIONS

SYM	DESCRIPTION	DR	CHK	AUTH	DATE
A		TD			

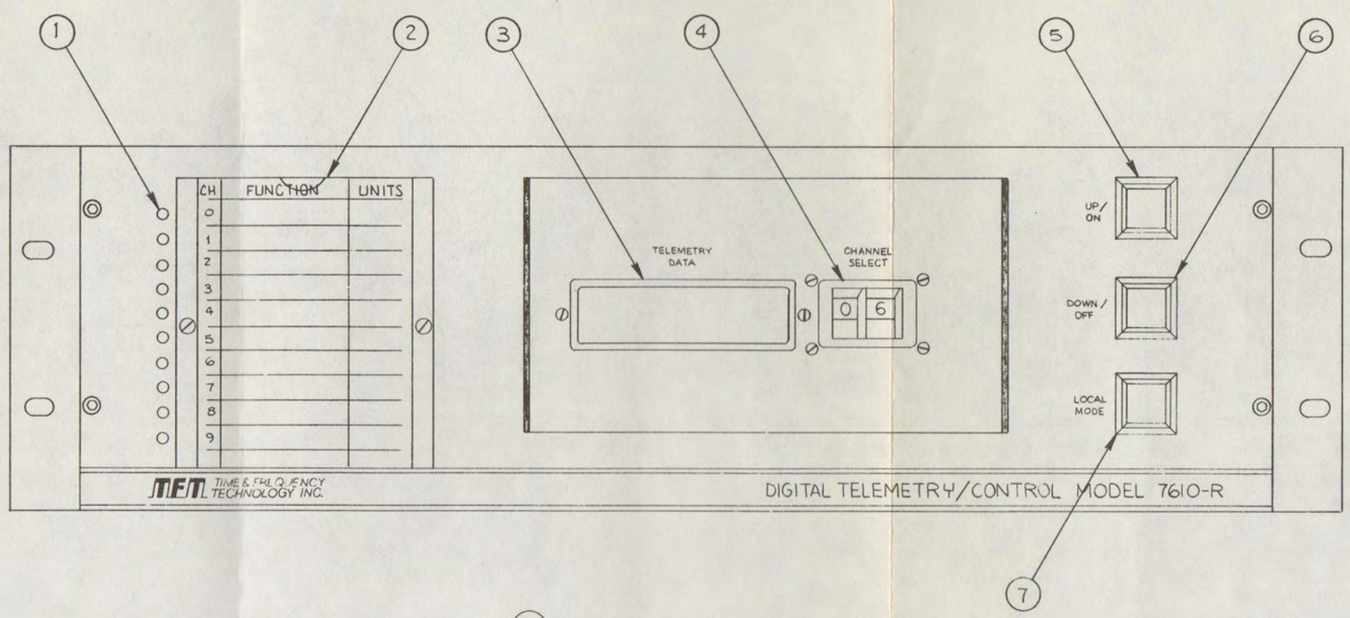

FIGURE 3-3

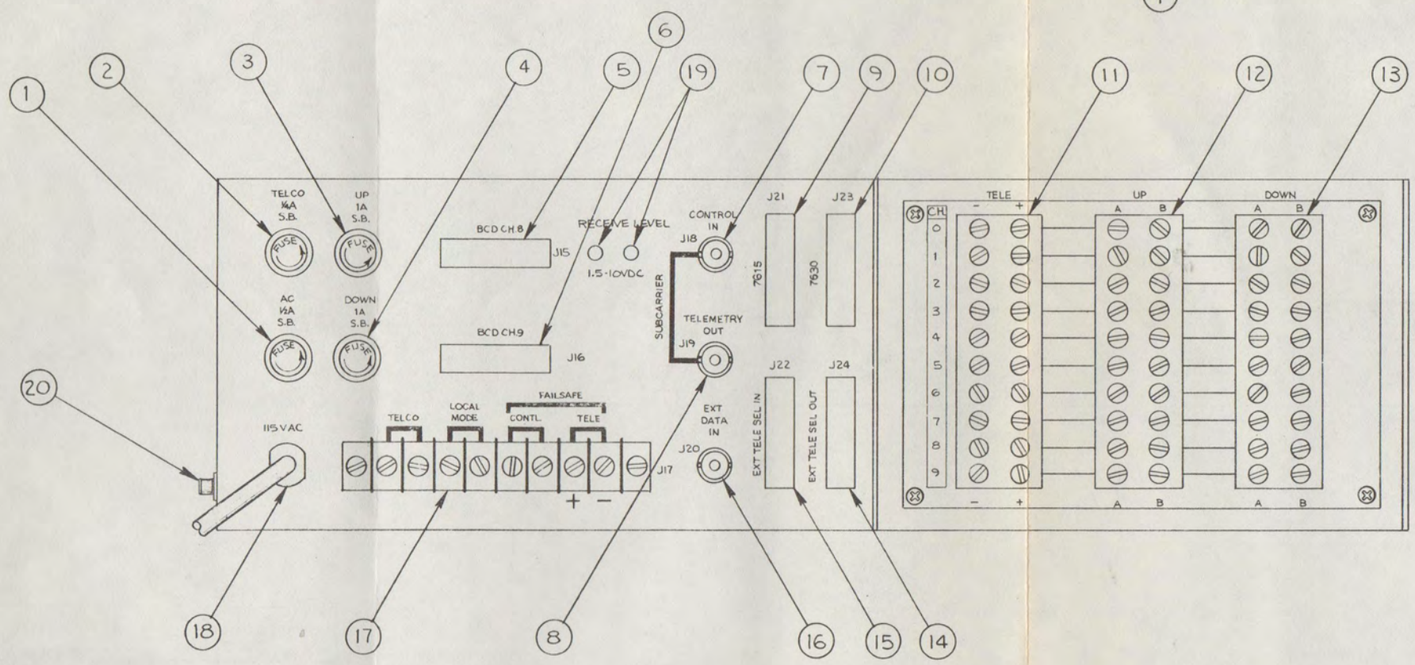

FIGURE 3-4

QTY PER ASSY	ITEM NO.	EN NO.	PART NO.	DESCRIPTION	REF. DES.
				LIST OF MATERIALS	

REMOVE ALL BURRS AND SHARP EDGES

TOLERANCES UNLESS OTHERWISE SPECIFIED
.XX ± ANGULAR ±
.XXX ±

DO NOT SCALE THIS PRINT

		DATE
DRAWN BY	Jim Berg	3-3-77
CHK. BY		6/14/77
PROJ. ENG.		6/17/77
MFG. ENG.		
APPD.		
APPD.		
ECO NO.		

TIME & FREQUENCY TECHNOLOGY INC.
3000 Olcott St., Santa Clara, California 95050
(408) 246-6365

TITLE: FRONT & REAR PANEL MODEL 7610-R

SIZE D | DRAWING NO. 6600-1200 | REV. A

SCALE 1:1 | SHT 1 OF 1

DWG. NO.

If You Didn't Get This From My Site,
Then It Was Stolen From...
www.SteamPoweredRadio.Com

3.3.3 Continued.

Fig. 3-3 Ref. No.	Name	Function
4	CHANNEL SELECT thumbwheel switches	When the LOCAL MODE switch is depressed, the operating channel can be selected at the remote site by means of the CHANNEL SELECT thumbwheel switches on the 7610-R.
5	UP/ON pushbutton switch	When the LOCAL MODE switch is depressed, depressing the UP/ON switch transmits an UP or ON command to the device controlled by the selected channel. This switch is lighted whenever an UP or ON command occurs, from either the 7610-C or from the 7610-R in the local mode.
6	DOWN/OFF pushbutton switch	When the LOCAL MODE switch is depressed, depressing the DOWN/OFF switch transmits a DOWN or OFF command to the device controlled by the selected channel. This switch is lighted whenever a DOWN or OFF command occurs, from either the 7610-C or from the 7610-R in the local mode.
7	LOCAL MODE pushbutton switch	When depressed, control is transferred from the Model 7610-C to the Model 7610-R. Depressing the switch causes it to light, indicating local control, and also activates the 7610-R TELEMETRY DATA display.

3.3.4 Model 7610-R Rear Panel.

Fig. 3-4 Ref. No.	Name	Function
1	AC fuse	Fuses AC input to power transformer.
2	TELCO fuse	Fuses TELCO telephone line.
3	UP fuse	Fuses UP control line.
4	DOWN fuse	Fuses DOWN control line.

www.SteamPoweredRadio.Com

3.3.4 Continued.

Fig. 3-4 Ref. No.	Name	Function
5	BCD CH8 connector J15	When installed, provides means of introducing optional external parallel BCD data into the 7610-R on Channel 8.
6	BCD CH9 connector J16	When installed, provides means of introducing optional external parallel BCD data into the 7610-R on Channel 9.
7	SUBCARRIER CONTROL IN connector J18	Provides means of connecting the SCA input from the STL uplink.
8	SUBCARRIER TELEMETRY OUT connector J19	Provides the SCA or FSK output for the radio or TV downlink.
9	7615 connector J21	When installed, provides means of connecting cable to optional 7615-R.
10	7630 connector J23	When installed, provides means of connecting cable to optional 7630 for channel expansion.
11	TELE terminal strip	Provides means of introducing DC telemetry sampling voltage to be read out on the TELEMETRY DATA display when the corresponding channel is selected. A positive DC voltage applied to the + terminal will give a positive reading on the display.
12	UP terminal strip	When the UP/ON pushbutton is depressed at the 7610-C or at the 7610-R in the local mode, provides a relay contact closure from A to B for the selected channel.
13	DOWN terminal strip	When the DOWN/OFF pushbutton is depressed at either the 7610-C or the 7610-R in the local mode, provides a relay contact closure from A to B for the selected channel.

If You Didn't Get This From My Site,
Then It Was Stolen From...
www.SteamPoweredRadio.Com

3.3.4 Continued.

Fig. 3-4 Ref. No.	Name	Function
14	EXT TELE SEL OUT CONNECTOR J24 (Option)	Used in conjunction with the optional analog scanner and an external monitoring device.
15	EXT TELE SEL IN connector J22 (Option)	Provides a means for introducing an input from an external monitoring device to the optional analog scanner board.
16	EXT DATA IN connector J20	Used in conjunction with external monitoring control to introduce external FSK data to be mixed with other FSK data being sent to the 7610-C on the downlink.
17	Terminal strip J17	TELCO terminals: Provide connection to TELCO line. LOCAL MODE terminals: Provides a relay closure when the 7610-R is in the local mode. FAILSAFE CONTL terminals: Provide relay contact closure when operation is normal. If power fails at the 7610-R, or if the command uplink fails, the relay contacts open. A time delay adjustable from approximately 20 to 55 seconds occurs between uplink failure and contact opening. FAILSAFE TELE terminals: Provide a 12-volt relay energizing voltage when there is a telemetry failure on the downlink. There is a fixed time delay of 7 to 12 seconds between downlink failure and appearance of the relay voltage.
18	115VAC POWER cord	Provides means for connecting to a prime power source (115 VAC unless otherwise specified).

www.SteamPoweredRadio.Com

3.3.4 Continued.

Fig. 3-4 Ref. No.	Name	Function
19	RECEIVE LEVEL	Provides a test voltage proportional to the received signal level thru the FSK Modem detector filters.
20	Grounding Bolt (Serial #225-3 and later units only)	Provides a means of connecting chassis ground.

3.3.5 Model 7615-C Front Panel.

Fig 3-5 Ref. No.	Name	Function
1	STATUS indicators	Each of these LEDs indicates the status of one operating parameter of the remote transmitter. A lighted indicator signifies that the monitored circuit is on, or that is it operating within specified limits.
2	CONTROL switches	In the up position, each switch turns on one function at the remote site. The function controlled by a particular switch may or may not be related to the parameter monitored by the indicator directly above it.
3	Removable Identification Card	Provides means of recording the function of each CONTROL switch and STATUS indicator.

3.3.6 Model 7615-C Rear Panel.

Fig. 3-6 Ref. No.	Name	Function
1	115 VAC power cord	Provides connection to a prime power source (115 VAC unless otherwise specified).
2	Fuse, 1/2 ampere slo blo	Fuses the power line.

www.SteamPoweredRadio.Com

3.3.6 Model 7615-C Rear Panel.

Fig. 3-6 Ref. No.	Name	Function
3	STATUS barrier strips	Provide 15 TTL-level outputs corresponding to the 15 front panel STATUS indicators, for operating external indicators, A low level at the barrier strip corresponds to a lighted front panel STATUS indicator.
4	CONTROL barrier strips	Provide an alternative to the front panel switches for controlling ON/OFF functions at the remote site. An input consisting of a relay closure or TTL logic 0 will cause a function to be turned on at the remote site.
5	25-pin connector J1	Provides means for connecting to a second 7615-C when installed.
6	25-pin connector J2	Provides means for connecting to the 7610-C or first 7615-C.
7	Ground Bolt (Serial #225-3 and later units only)	Provides a means of connecting chassis ground.

3.3.7 Model 7615-R Front Panel.

Fig. 3-7 Ref. No.	Name	Function
1	STATUS indicators	These indicators have the same function as described in Section 3.3.5 for the 7615-C STATUS indicators.
2	CONTROL switches	When the LOCAL CONTROL/REMOTE CONTROL switch is in the LOCAL CONTROL position, these switches have the same function as described in Section 3.3.5 for the 7615-C CONTROL switches.
3	Removable Identification Card	Provides means of recording the function of each CONTROL switch and STATUS indicator.

www.SteamPoweredRadio.Com

3.3.7 Model 7615-R Front Panel.

Fig. 3-7 Ref. No.	Name	Function
4	LOCAL CONTROL/REMOTE CONTROL switch	This switch is normally in the REMOTE CONTROL position to permit control at the control site. When the switch is in the LOCAL CONTROL position, all commands from the control site are locked out, and control is performed by the switches on the 7615-R front panel.

3.3.8 Model 7615-R Rear Panel.

Fig. 3-8 Ref. No.	Name	Function
1	115 VAC power cord	Provides connection to a prime power source (115 VAC unless otherwise specified).
2	Fuse, 1/2 ampere slo blo	Fuses the power line.
3	STATUS barrier strips	Used to connect inputs from external sensors to the 7615-R. An input consisting of a relay contact closure or a TTL logic zero will light the STATUS indicator associated with that STATUS input.
4	CONTROL barrier strips	Provide a relay contact closure from a terminal on the top strip to the terminal immediately below it when an ON command is received for that channel. The contacts are isolated from ground.
5	25-pin connector J1	Provides means for connecting to a second 7615-R when installed.
6	25-pin connector J2	Provides means for connecting to the 7610-R or first 7615-R.
7	LOCAL WARN barrier strip	Provides a switch contact closure when the 7615-R is in local mode, for operating an external warning device.

www.SteamPoweredRadio.Com

NEXT ASSY	USED ON
5004-7610	7615C

REVISIONS

SYM	DESCRIPTION	DR	CHK	AUTH	DATE
A	REL TO PRODUCTION	TD			5-11-77

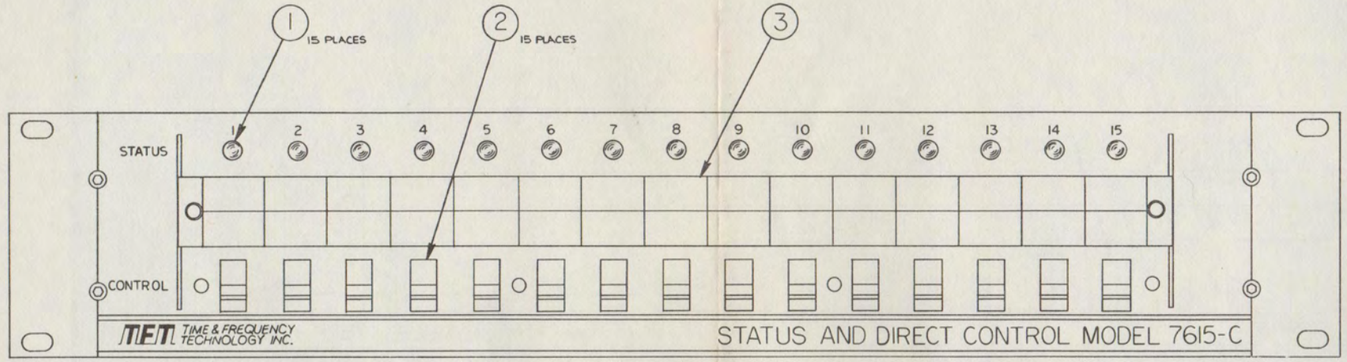

FIG 3-5
7615C

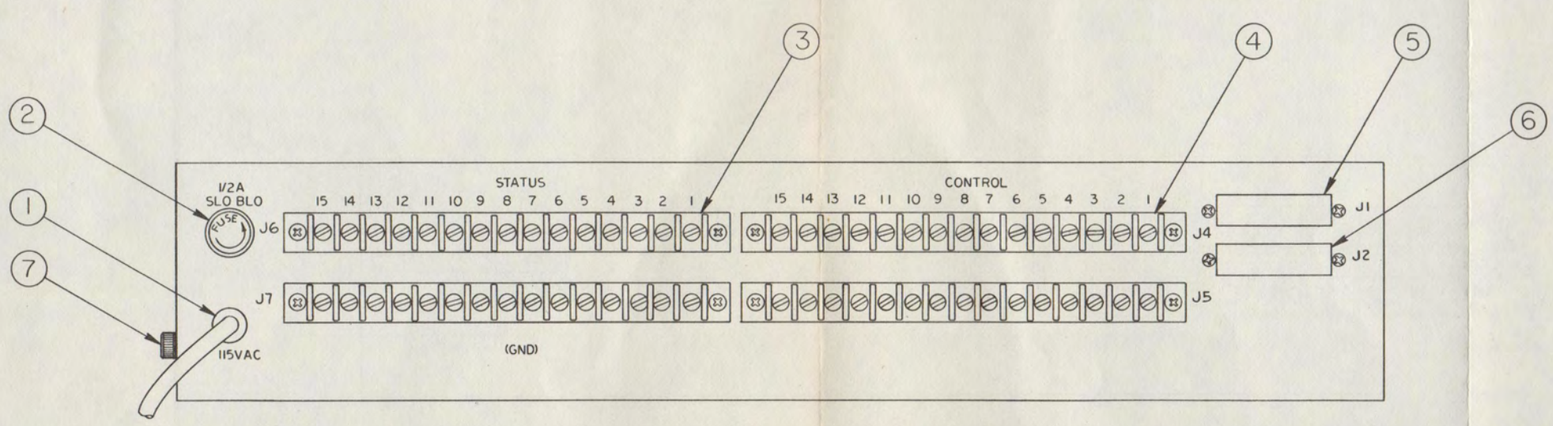

FIG 3-6
7615C

QTY PER ASSY	ITEM NO.	EN NO.	PART NO.	DESCRIPTION	REF. DES.

LIST OF MATERIALS

REMOVE ALL BURRS AND SHARP EDGES

TOLERANCES UNLESS OTHERWISE SPECIFIED
.XX ± ~ ANGULAR
.XXX ± ~ ± ~

DO NOT SCALE THIS PRINT

DRAWN BY	Dee Bang	DATE 5-4-77
CHK. BY	Hau	6/14/77
PROJ. ENG.	CWG	6/17/77
MFG. ENG.		
APPD.		
APPD.		
ECO NO.		

TFT TIME & FREQUENCY TECHNOLOGY INC.
3000 Olcott St., Santa Clara, California 95050
(408) 246-6365

TITLE
FRONT & REAR PANEL
MODEL 7615C

SIZE	DRAWING NO.	REV.
D	6600-1380	A

SCALE 1/1 SHT. 1 OF 1

DWG. NO.

If You Didn't Get This From My Site,
Then It Was Stolen From...
www.SteamPoweredRadio.Com

NEXT ASSY	USED ON
5004-7610	7615R

REVISIONS

SYM	DESCRIPTION	DR	CHK	AUTH	DATE
A	REL TO PRODUCTION	TD			5-11-77

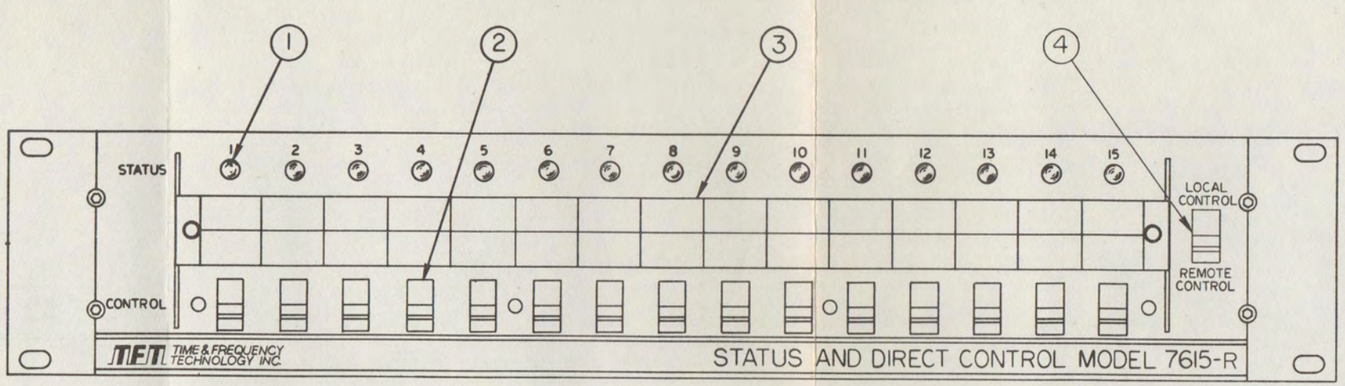

FIG 3-7
7615R

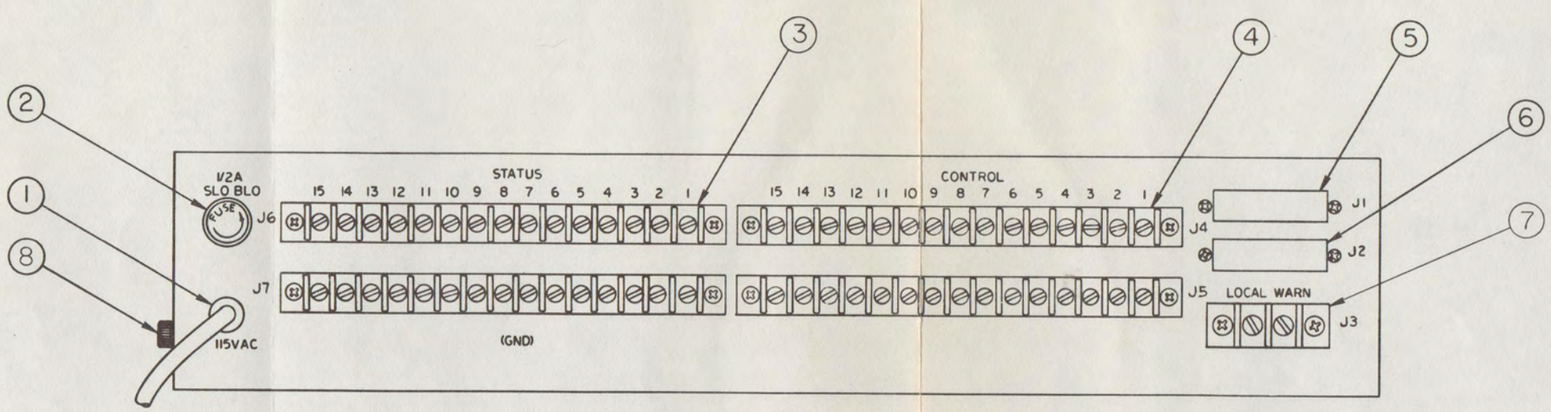

FIG 3-8
7615R

QTY PER ASSY	ITEM NO.	EH NO.	PART NO.	DESCRIPTION	REF. DES.

LIST OF MATERIALS

REMOVE ALL BURRS AND SHARP EDGES

TOLERANCES UNLESS OTHERWISE SPECIFIED
.XX ± ~ ANGULAR
.XXX ± ~ ± ~

DO NOT SCALE THIS PRINT

DRAWN BY Don Berg 5-9-77
CHK. BY Jan 5/11/77
PROJ. ENG. DWE 6/11/77
MFG. ENG.
APPD.
APPD.
MFG. NO.

TIME & FREQUENCY TECHNOLOGY INC.
5520 Olivetti St., Santa Clara, California 95050
(408) 243-6300

TITLE
FRONT & REAR PANEL
MODEL 7615R

SIZE D DRAWING NO. 6600-1381 REV. A
SCALE 1/1 SHT. 1 OF 1

If You Didn't Get This From My Site,
Then It Was Stolen From...
www.SteamPoweredRadio.Com

3.3.8 Model 7615-R Rear Panel.

Fig. 3-8 Ref. No.	Name	Function
8	Grounding Bolt (Serial #225-3 and later units only)	Provides a means of connecting chassis ground.

3.3.9 Model 7630 Front Panel.

Fig. 3-9 Ref. No.	Name	Function
1	Calibration or scaling potentiometers	Used to calibrate the analog telemetry voltages received through the rear panel barrier strips. Each channel has its own calibration potentiometer.
2	Channel Identification Cards	Removable cards provides identification of the assigned function and units for each of the 20 channels.

3.3.10 Model 7630 Rear Panel.

Fig. 3-10 Ref. No.	Name	Function
1	TELE terminal strips	Provide means of introducing DC telemetry sampling voltage to be read out on the TELEMETRY DATA display when the corresponding channel is selected. A positive voltage applied to the + terminal will give a positive reading on the display.
2	UP terminal strips	When the UP/ON pushbutton is depressed at the 7610-C (or at the 7610-R in the local mode), provide a relay contact closure from A to B for the selected channel.
3	DOWN terminal strips	When the DOWN/OFF pushbutton is depressed at the 7610-C (or at the 7610-R in the local mode), provide a relay contact closure from A to B for the selected channel.

www.SteamPoweredRadio.Com

3.3.10 Model 7630 Rear Panel.

Fig. 3-10 Ref. No.	Name	Function
4	Control Select connector J2	Connects to the next higher 7630 when installed.
5	Control Select connector J1	Connects to the 7610-R or next lower 7630.
6	Scan Select connector J3 (Option)	Used in conjunction with optional analog scanner and an external monitoring device.
7	Scan Select connector J4 (Option)	Used in conjunction with optional analog scanner and an external monitoring device.
8	Grounding Bolt (Serial #225-3 and later units only)	Provides a means of connecting chassis ground.
9	Channel Assignment Labels (Sticky Back Peel-off)	Attached by customer at time channels are assigned. (Set of Labels furnished with each 7630).

3.4 Telemetry Data and Channel Display.

If the operator at the control point wishes to control or monitor a remote transmitter parameter from the 7610-C front panel, he first makes sure that the EXTERNAL CONTROL switch is in the OFF position. He then refers to the card in the drawer at the bottom of the 7610-C to determine the channel number of the device he wishes to control or the circuit he wishes to monitor, and selects that channel by using the thumbwheel CHANNEL SELECT switches. When the selection of the channel is accomplished at the remote point, the CHANNEL VERIFICATION display will indicate the channel number selected.

To turn on the controlled device or, if the controlled device is capable of increasing or decreasing one of its parameters, to increase the value of the parameter, the operator presses the UP/ON button; the pushbutton will illuminate to indicate that the command has been executed at the remote site. Alternatively, to turn off a device or decrease a parameter, he presses the DOWN/OFF button; again, the pushbutton will illuminate when the command has been executed.

The analog voltage from the point monitored on the selected channel will be displayed in digital form on the TELEMETRY DATA display. After the device has been commanded and/or the telemetry observed on the selected channel, another channel may be selected for control and monitoring.

www.SteamPoweredRadio.Com

NEXT ASSY	USED ON
5004-7610	7630

REVISIONS

SYM	DESCRIPTION	DR	CHK	AUTH	DATE
A	REL TO PRODUCTION	TD			5-4-77

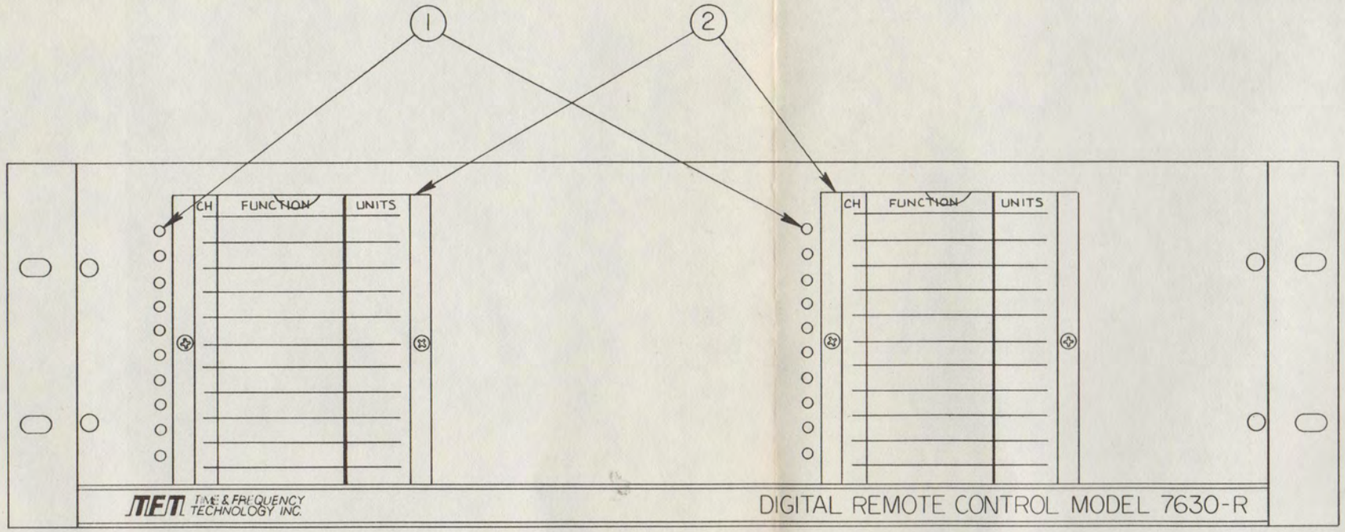

FIGURE 3-9
7630 FRONT PANEL

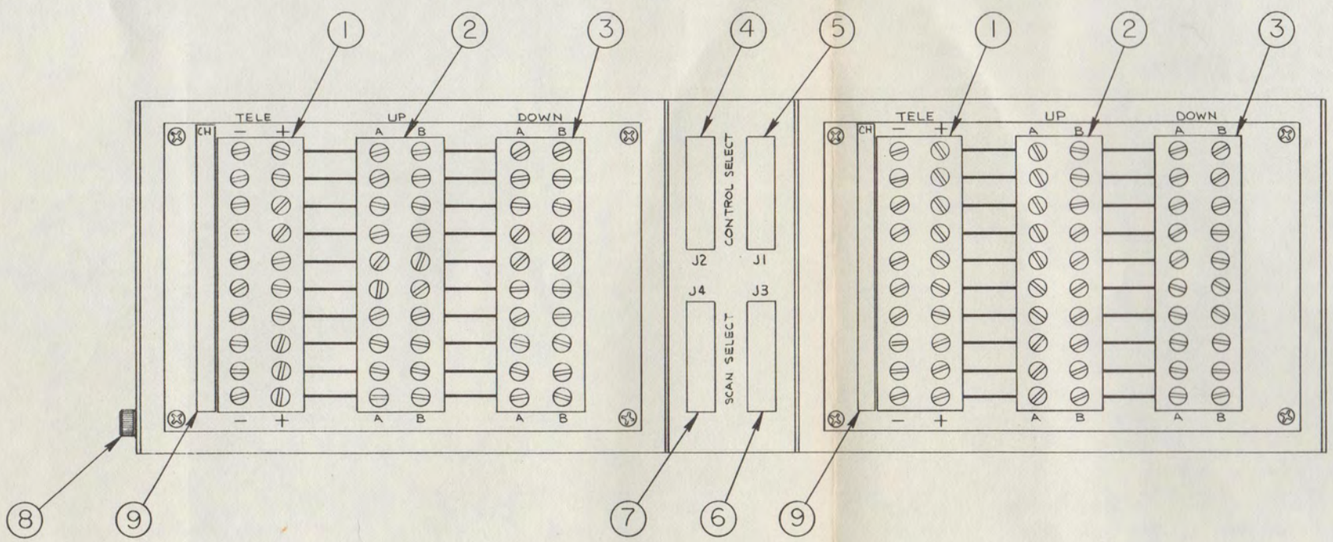

FIGURE 3-10
7630 REAR PANEL

QTY PER ASSY	ITEM NO.	EN NO.	PART NO.	DESCRIPTION	REF. DES.

LIST OF MATERIALS

REMOVE ALL BURRS AND SHARP EDGES

TOLERANCES UNLESS OTHERWISE SPECIFIED
.XX ± ANGULAR
.XXX ± ±

DO NOT SCALE THIS PRINT

		DATE
DRAWN BY	DuBay	5-4-77
CHK. BY	Flau	6/4/77
PROJ. ENG.	Cust	6/7/77
MFG. ENG.		
APPD.		
APPD.		
ECO NO.		

TIME & FREQUENCY TECHNOLOGY INC.
3000 Olcott St., Santa Clara, California 95050
(408) 246-6365

TITLE
FRONT AND REAR PANEL
MODEL 7630

SIZE D | DRAWING NO. 6600-1370 | REV. A
SCALE 1/1 | SHT. 1 OF 1

DWG. NO.

If You Didn't Get This From My Site,
Then It Was Stolen From...
www.SteamPoweredRadio.Com

3.4 Telemetry Data and Channel Display. (Continued)

If the EXTERNAL CONTROL switch is set to the ON position, channel selection and remote control will be performed by a device external to the Model 7610-C.

The remote transmitter is normally controlled at the control site. However, for channel calibration or other maintenance purposes, an operator at the remote site can control the local transmitter by pressing the LOCAL MODE button on the 7610-R front panel. The CHANNEL SELECT thumbwheel switches and the UP/ON and DOWN/OFF pushbuttons can then be used in the same way as those at the control site. The analog voltage monitored on the selected channel will appear on the 7610-R TELEMETRY DATA display. This display is blanked when LOCAL MODE operation is not selected.

3.5 Calibration of Telemetry Data Display.

The calibration potentiometers (Reference No.1 in Figure 3-3) should be turned fully counterclockwise (if input voltages are greater than 4 volts) before input voltages are applied to the TELE -/+ terminals on the 7610-R or 7630 rear panel, as described in Section 2.3.2g or 2.3.5a. To calibrate the display, press the LOCAL MODE switch on the 7610-R front panel, select the channel to be checked, and adjust the calibration potentiometer for the selected channel to display the value of the parameter being sampled. For example, if Channel 3 is monitoring the final amplifier plate voltage for which the transmitter's analog meter indicates 2840 volts, the Channel 3 potentiometer could be adjusted for a digital display of +0284 (i.e +0.284 VDC into 7610-R DVM). The 7610-R will not accurately display a count greater than ±3100, i.e ±3.100 VDC into the DVM.

3.6 Failsafe Circuits.

A failure of the command data to reach the remote site and control the transmitter will cause the transmitter to go off the air if such failure lasts for 20 to 55 seconds (adjustable).

A failure in the telemetry transmission from the remote site to the control site lasting more than 10 seconds will cause an LED to light on the 7610-C front panel display (Reference No.2 in Figure 3-1).

3.7 External BCD Data Input to 7610-R. (Optional)

When this option is installed, the telemetry data displayed for Channel 9 will be the external BCD data applied to the Model 7610-R. If a second channel is also used for external BCD data, this data will be displayed when Channel 8 is selected.

www.SteamPoweredRadio.Com

3.8 Model 7615 Status Monitoring/Direct Control System.
(Optional)

For this option, one or two 7615-C units are installed at the control site, and a like number of 7615-R units are installed at the remote site. Each 7615-C unit has 15 front panel toggle switches, each of which controls a function at the remote site. The function controlled by each switch is recorded on a card immediately above the switches. This direct control is independent of the 7610-C channelized control.

The 7615-C also has 15 front panel LEDs, each of which indicates the status of circuits or devices at the remote site. They can also be used to verify on-off functions. The circuit or device being monitored by each status LED is recorded on a card immediately below the LEDs.

The 7615-R has similar sets of 15 switches and 15 LEDs for control and status indication at the remote site. The 7615-R switches are enabled by placing the Local Control/Remote Control switch to Local Control.

CAUTION

If there are key functions set to a particular control format, the operator should set those functions on the 7615-R front panel before switching the system to the local mode. This will prevent any interruption in the commands to other external equipment.

3.9 Model 7630 Channel Expander. (Optional)

The Model 7630 is installed at the remote site only, and provides additional channels of control and telemetry over the ten provided by the basic Model 7610-R. These additional channels (up to a total of 80 for the system) are selected by the thumbwheel switches on the 7610-C or 7610-R. There are no operating controls on the 7630.

www.SteamPoweredRadio.Com

SECTION 4

THEORY OF OPERATION

4.1 Block Diagram Discussion.

4.1.1 7610-C Block Diagram. (Figure 6-1-1)

The 7610-C converts the binary control data from its CHANNEL SELECT thumbwheel switches, from its UP/ON and DOWN/OFF pushbutton switches, and from toggle switches on the Model 7615-C (when used) into serial binary data for transmission over the communication link to the remote site. The 7610-C also receives serial binary telemetry data from the remote site and converts it to 8-bit parallel data for the TELEMETRY DATA and CHANNEL VERIFICATION displays.

The transmit function is diagrammed on the left-hand side of Figure 6-1-1. The seven lines from the thumbwheel CHANNEL SELECT switches provide BCD outputs from 00 to 79 (80 channels). The UP/ON and DOWN/OFF switches require one bit each. The multiplexer connects these nine lines to its output when the front panel EXTERNAL CONTROL switch is in the OFF position; when the switch is in the ON position, these nine bits of control data come from an external source. The seven CHANNEL SELECT bits with one telemetry failsafe bit from the receiver circuits are applied as parallel inputs to shift register U13. The same bits are applied, for redundance to increase reliability, as parallel inputs to shift register U12. Similarly, four bits from the remote site select circuit, one bit from the front panel UP/ON switch, and one bit from the front panel DOWN/OFF switch are applied to U11.

A load pulse from the control and timing circuitry loads these inputs into the shift registers. A clock pulse loads this data into the Universal Asynchrous Receiver/Transmitter (UART) at terminals TX1 through TX7, together with a logic zero from the end-of-word generator (see top row of Table 4-1). Start, stop, and parity bits are added in the UART, and all 11 bits are then fed out of the UART from its TRO output as serial data to the FSK generator in the modem.

A shift pulse from the UART then shifts out the next bit from all shift registers, so that the data in the second row of Table 4-1 is loaded into the UART, converted to serial data, and sent to the modem. This continues through the eighth bit from the shift registers, at which time the output of the end-of-word generator is a logic one. See TX8. This signals the end of the command word; the shift registers are then reloaded and the entire cycle is repeated.

If You Didn't Get This From My Site,
Then It Was Stolen From...
www.SteamPoweredRadio.Com

Table 4-1. Model 7610-C Transmit Data Format

Loaded S/R Bit	Bit	TX1	TX2*	TX3	TX4	First 7615 TX5	TX6	Second 7615 TX7	TX8
H	1	TELE FAIL	CH4 (TELE FAIL)	UP	8	--	8	--	0
G	2	CH1	CH2 (CH1)	DOWN	7	15	7	15	0
F	3	CH2	CH1 (CH2)	SITE3	6	14	6	14	0
E	4	CH4	TELE(CH4) FAIL	SITE2	5	13	5	13	0
D	5	CH8	CH40(CH8)	SITE1	4	12	4	12	0
C	6	CH10	CH20(CH10)	SITE0	3	11	3	11	0
B	7	CH20	CH10(CH20)	DOWN	2	10	2	10	0
A	8	CH40	CH8 (CH40)	UP	1	9	1	9	1 (sync)

NOTES:

1. The letters in the Loaded S/R Bit column represent the data bits initially stored in each shift register. H is the first bit to be shifted out, and A is the last.

2. CH1 throuch CH8 denote the 4-bit BCD output of the LSD CHANNEL SELECT switch.

3. CH10 through CH40 denote the 3-bit BCD output of the MSD CHANNEL SELECT switch.

4. UP and DOWN denote outputs of the front panel UP and DOWN switches. Logic 1 represents switch closure.

5. SITE 0 through SITE 3 are for site selection in a multisite installation. A 4-bit code denotes the selected site.

6. The numbers in columns TX4 through TX7 denote control switches on the 7615 front panels. A logic 1 represents switch closure.

7. TX1 through TX8 are the UART transmit parallel inputs.

* ( ) indicates formats on earlier production units i.e units preceding Serial Number 225-3.

www.SteamPoweredRadio.Com

The receive function is diagrammed on the right-hand side of Figure 6-1-1. Serial data from the remote site enters the UART at the Receiver Input (RI). When the UART detects a start bit, it starts loading one 8-bit serial character within the UART. After the character is loaded, the Data Received (DR) line is set high. This allows the shift registers to sample the UART parallel data output at terminals RX1 through RX8. When the shift registers sample the output, they strobe the Data Received Reset (DRR) line to a logic zero to reset the DR line.

The parallel data at UART outputs RX1, RX2, and RX3 is applied to the serial inputs of 8-bit shift registers U26, U25, and U23. When the DR line from the UART goes high, the input data is shifted into the three shift registers. Data at RX4 through RX7 is shifted into the 7615-C at the same time (when that option is installed). A logic zero from RX8 is applied to the end-of-word detect and control circuitry; this input remains low for the end of the word. At the end of the first shift, the data shown on the top row of Table 4-2 has been shifted into the registers. The control circuitry then strobes the UART's DRR line to a logic zero to reset it, and then the next serial inputs from the remote site are converted to parallel data at RX1 through RX8. This data, corresponding to the second line of Table 4-2, is shifted into the shift registers. This process continues until eight bits of data have been received for each shift register.

Table 4-2. Model 7610-C Receive Data Format

Loaded S/R Bit	Bit	RX1	RX2	RX3	First 7615 RX4	First 7615 RX5	Second 7615 RX6	Second 7615 RX7	RX8
H	1	80	CH 1	UP	8	--	8	--	0
G	2	40	Polarity 1=+	DOWN	7	15	7	15	0
F	3	20	2000	CH40	6	14	6	14	0
E	4	10	1000	CH20	5	13	5	13	0
D	5	8	800	CH10	4	12	4	12	0
C	6	4	400	CH8	3	11	3	11	0
B	7	2	200	CH4	2	10	2	10	0
A	8	1	100	CH2	1	9	1	9	1 (sync)

NOTES: The numbers in the RX1 and RX2 columns refer to the BCD data for the four digits of the TELEMETRY DATA display. Other entries in the table are similar to those in Table 4-1, except that Table 4-2 RX4-RX7 describes status displays rather than switches.

www.SteamPoweredRadio.Com

A latch pulse, which is produced by the control circuit after eight shift pulses have been received, clocks the outputs of the shift registers into parallel registers for the displays. The UART RX1 and RX2 outputs from shift registers U26 and U25 provide the data received from the remote sites (in BCD form) for the four digits of the TELEMETRY DATA display, as shown in Table 4-2. RX2 also provides a polarity bit for the display, a logic one for positive data and a logic zero for negative data. The 14 bits of BCD information plus the one polarity bit are decoded on the display board to drive the TELEMETRY DATA display.

One bit from RX2 and six bits from RX3 are decoded on the display board and used to drive the two-digit CHANNEL VERIFICATION display. The two remaining RX3 bits are used to light the UP or DOWN pushbuttons to verify that the proper up or down command was received at the remote site. The outputs of RX4 through RX7 are used to indicate the status of circuits controlled by the Model 7615-C switches when that option is installed.

When there is a downlink data failure lasting 7 to 12 seconds, it is detected in the tele failsafe circuit, which then lights an LED in the display and applies a logic one to one of the parallel inputs of transmitter shift register U13. The downlink failure is also indicated at the rear-panel at the TELE FAIL terminals of J12.

4.1.2 <u>7610-R Block Diagram.</u> (Figure 6-2-1)

The serial control-word data from the control site is fed from the FSK modem into the UART through its RI terminal. The operation of the UART is as described for the 7610-C. The parallel data at RX1, RX2, and RX3 is shifted into shift registers U32,U31, and U33; this is the data in the top row of Table 4-1. As each serial character is received from the control site, it is converted to parallel data by the UART and shifted into the shift registers. When all eight bits have been shifted into the shift registers, the 8-bit word in shift register U32 is compared with the 8-bit word in U31. Since the same data was transmitted for these two words (see the TX1 and TX2 columns in Table 4-1), each bit stored in U32 should be the same as the corresponding bit in U31. If the two agree, the channel compare circuit sends a clock enable to register U38/U39, so that the 8-bit word can be clocked into the register. This word contains seven bits of channel select information plus the telemetry failsafe bit. If this bit is high, it indicates that there has been a failure to receive the telemetry at the control site for a period of 7 to 12 seconds. This bit is applied to the telemetry failsafe circuit, which delivers 12 volts to rear-panel TELE FAILSAFE terminals when the bit is high, for energizing an external relay.

The 7-bit channel select word in register U38/U39 is clocked into the 2-to-1 multiplexer by the end-of-word latch pulse. If the LOCAL MODE pushbutton is not pressed, the register bits are delivered to the relay select logic circuit. If the pushbutton is pressed, the multiplexer selects the output of the 7610-R front panel

www.SteamPoweredRadio.Com

thumbwheel CHANNEL SELECT switches for input to the relay select logic circuit. The seven bits out of the multiplexer are also fed through shift registers into the UART for transmission back to the control site for the 7610-C CHANNEL VERIFICATION display.

The data at UART terminal RX3 is loaded into shift register U33. The UP shift register bits 1 and 8 should be the same level, and the DOWN bits 2 and 7 should be the same level. These are compared in the up/down control circuits; if they agree, the UP and DOWN control signals are fed through to the UP and DOWN relays. If the LOCAL MODE button on the 7610-R is pressed, the multiplexer will deliver UP and DOWN control signals from front-panel UP/ON and DOWN/OFF switches instead of the signals from shift register U33. U33 also receives four bits of site selection data, binary coded to identify the site to be controlled. These four bits are fed into the site compare circuit, which is programmed to identify one of sixteen possible codes, one assigned to the site at which this particular 7610-R is installed. If there is agreement, the latch signal out of the end-of-word detector and control circuit is enabled.

The data at UART terminals RX4 through RX7 is sent to Model 7615-R modules (when installed) for control purposes.

The logic level at RX8 is a zero for the first seven bits, and a one for the eighth bit to identify the end of the command word. This produces a latch, which clocks the channel select word into register U38/U39, and also the UP and DOWN control signals from the UP/DOWN control circuit. The end-of-word bit is also applied, together with control timing pulses, to the control failsafe circuit. If either or both of these inputs fail to appear for a period of 20 to 55 seconds (adjustable), the control failsafe circuit detects this condition and deenergizes the control failsafe relay. The relay contacts are brought out to the rear-panel CONTL FAILSAFE terminals for control of the transmitter.

The relay logic circuit decodes the 7-bit channel select word to energize the relay (1 of 10) on the relay board that corresponds to the channel selected. Each relay has three pairs of contacts. One pair is connected to a pair of terminals corresponding to the rear-panel TELE +/-strip; thus the telemetry analog voltage applied to that pair of terminals will be sent to the A/D converter for transmission back to the control site in digital form when that particular channel is selected.

A second pair of contacts within the same relay connects the rear-panel UP A and B terminals for that channel to the UP relay; thus if the UP bit in the command word is a logic one for that channel, the energizing of the UP relay will place a short across that channel's UP A and B terminals. The DOWN circuit operates similarly.

The analog voltage for the selected channel is fed from the relay card to the A/D converter, and the resulting digital data is stored in a register. When the External BCD option is installed, the output from the BCD input card is substituted for the register output on Channels 8 and 9, and the register is disabled on those channels.

www.SteamPoweredRadio.Com

The 15-bit BCD register output (two bits for the MSD, four bits for the three other digits and one polarity bit) is applied to shift registers U24 and U25. The register output also drives the 7610-R TELEMETRY DATA display when the LOCAL MODE button is pressed.

Six of the seven channel-select bits from the 2-to-1 multiplexer are applied to shift register U26; the seventh bit goes to shift register U25. The UP verification bit and the DOWN verification bit from the UP/DOWN control circuit are also applied to the input of shift register U26. The shift registers are loaded and then their bits are shifted into UART terminals TX1 through TX3 as described in Section 4.1.1 The data from the optional 7615s and the output of the end-of-word shift register are also shifted into the UART. The resulting serial output is fed from the UART's TRO terminal to the FSK modem for transmission to the 7610-C at the control site.

4.1.3 <u>7610 Communication Link.</u> (Options) (Figure 6-3).

The communication link between the control site and the transmitter site can be a telephone line (TELCO) or a radio link (STL microwave for control commands up, and the broadcast transmitter for telemetry down). Uplink commands are sent at a 150-baud data rate, and downlink telemetry at a 300-baud rate. The various switches shown in Figure 6-3 are set for the type of link to be used.

The logic-level serial data from the UART in the 7610-C is converted to serial-data tones in the FSK generator on the 7610-C modem card. Logic one becomes a 250-Hz tone, and logic zero a 400-Hz tone. For TELCO transmission, these tones are transformer-coupled into a standard 600-ohm telephone line. For transmission over an STL, the tones are fed to the studio's SCA generator to modulate the subcarrier before it is applied to the STL transmitter. If the studio has no SCA generator, an optional SCA generator card must be used. The switches shown, all of which are on a 16-pin DIP assembly in the 7610-C or a 14 pin DIP assembly in the 7610-R, are set to establish the appropriate path for the FSK signal.

At the remote site, the FSK signal is transformer-coupled into the FSK detector on the 7610-R modem card if transmission was over a telephone line; or demodulated in the optional SCA detector card and fed to the FSK detector if transmission was via an STL. The logic-level serial data from the FSK detector is applied to the 7610-R UART for serial-to-parallel conversion.

On the telemetry downlink, the logic-level serial data from the 7610-R UART is converted to FSK tones (800 Hz for logic one, 1100 Hz for logic zero). For TELCO transmission, the FSK signal is transformer-coupled into the same telephone line that was used for the uplink. For downlink transmission over the broadcast transmitter's subcarrier, the FSK signal is applied to the transmitter's SCA modulation input. If such an input is not available, the FSK signal must be routed through an optional SCA generator card. External FSK data can be introduced through a rear panel BNC connector on the 7610-R, and mixed with the other FSK signal on the downlink.

www.SteamPoweredRadio.Com

If a TELCO downlink is used, the FSK on the telephone line is transformer-coupled (same transformer for up-link) at the control site into the FSK detector on the 7610-C modem card. If the broadcast transmitter is used for downlink communication, the SCA is demodulated by the station's SCA monitor; or, if a monitor is not available, by an optional SCA detector card. The FSK signal is then fed to the FSK detector. The FSK detector output is the logic-level telemetry signal; it is applied to the RI input of the UART in the 7610-C. If external FSK was introduced onto the downlink at the 7610-R, it will appear at the EXT DATA OUT BNC connector on the 7610-C rear panel.

4.1.4 7615 Block Diagram.

The optional Model 7615 Status Monitoring/Direct Control System is used to expand the on/off control and status indication capability of the Model 7610. One or two 7615 pairs can be used to provide 15 or 30 additional channels, respectively. Each 7615 consists of a 7615-C unit for use at the control site and a 7615-R unit for use at the remote site.

In the 7615-C (Figure 6-4-1), control inputs come from either the 15 front panel toggle switches or switches connected to the rear panel CONTROL terminal strip. After inversion and buffering, the inputs are applied to the parallel inputs of two shift registers, one for the first eight bits (switch outputs) and the other for the last seven bits. A load pulse from the 7610-C shift the contents of the shift registers out serially. If the 7615-C is the first or only one installed at the control site, an internal switch is set to route the serial data to the 7610-C over the DI1 and DI2 lines; if the 7615-C is the second one installed, its switch is set to route the serial data to the 7610-C over the DI3 and DI4 lines. At the 7610-C, the DI1 through DI4 data is applied to terminals TX4 through TX7, respectively, of the UART (see Table 4-1).

The data is sent from the 7610-C to the 7610-R over the communication link as described in Section 4.1.3. The UART in the 7610-R delivers the data to the 7615-R (Figure 6-4-1) over the DØ1 and DØ2 lines (for the first 7615-R) or the DØ3 and DØ4 lines (for the second 7615-R). An internal switch in the 7615-R is set to feed the data from the proper lines into the shift registers. With the switches set as shown in Figure 6-4-1, the DØ1 serial data is shifted into an 8-bit shift register by a clock from the 7610-R. Then the next time the eight bits are received on DØ1, they are shifted into the same shift register and the contents of that shift register are shifted into a second 8-bit shift register. The contents of these two shift registers are then compared. At the same time, the serial data from DØ2 is undergoing similar processing. If there is agreement in both compare circuits, a latch pulse is gated into the clock input of a holding register to load the register with the DØ1 and DØ2 data. The outputs of the holding register are fed to relay drivers which drive 15 relays to produce contact closures at the rear panel CONTROL terminals that are in the up position.

If You Didn't Get This From My Site,
Then It Was Stolen From...
www.SteamPoweredRadio.Com

If the LOCAL CONTROL/REMOTE CONTROL switch on the 7615-R front panel is in the LOCAL CONTROL position, the relay drivers are disabled and the relays are controlled directly by the 7615-R CONTROL switches. In the LOCAL CONTROL position, the LOCAL CONTROL/REMOTE CONTROL switch also provides a contact closure to the rear panel LOCAL WARN terminals, so that an external warning device connected to these terminals will alert the operator that he is in local mode.

At the 7615-R, status inputs, which can be contact closures or TTL inputs, are introduced through the rear panel STATUS terminals. After inversion and buffering, they are applied through display drivers to the front panel STATUS display LEDs. The status inputs and the corresponding STATUS indicators are independent of the relay closure outputs. The status inputs are also applied to the parallel inputs of two shift registers and processed in the same way that the control inputs were processed in the 7615-C. Each shift register handles eight bits, but one bit from the second shift register is a spare. The serial outputs of the shift registers are switched to the DI1 and DI2 inputs to the 7610-R UART if this is the first-position 7615-R, or to DI3 and DI4 if it is the second-position 7615-R.

From the 7610-R UART, the data is sent over the communication link to the 7610-C, where the 7610-C UART delivers it in serial form to the 7615-C over DØ1 and DØ2, or DØ3 and DØ4 (Figure 6-4-1). THe data goes through another double-compare process like the one in the 7615-R. If the data bits compare, the data will be clocked into the holding register and fed through drivers to the front panel STATUS LEDs. The outputs of the drivers are also fed to the rear panel STATUS terminals for operating external indicators.

4.1.5 7630 Block Diagram. (Figure 6-6-1)

Each optional Model 7630 Channel Expander contains 20 relays on two relay boards as in the 7610-R to provide 20 additional channels of UP/DOWN control and telemetry functions. The 7630s are used at the remote site only, and derive their power from the 7610-R. Up to three and a half 7630s can be used with a 7610-R.

The channel relay board on the left-hand side of Figure 6-6-1 contains 10 relays. For the first 7630, these relays would be for channels 10 through 19; for the second 7630, channels 30 through 39; etc. As in the 7610-R, each relay has three pairs of contacts -- one pair for the telemetry analog input voltage, one pair for the UP control, and one pair for the DOWN control. These contacts are connected to rear panel terminals as in the 7610-R. The second relay board in the 7630, shown on the right-hand side of the block diagram, is identical to the board just described, except it is for channels 20 through 29 (in the first 7630), 40 through 49 (in the second 7630), etc. The relay boards also contain a calibration or scaling potentiometer for each channel, as in the 7610-R.

Relay control comes from the 7610-R through J1 on the 7630 rear panel. For the first 7630, J1 is connected directly to J23 on the 7610-R. For the second and other 7630s, connection is daisy

www.SteamPoweredRadio.Com

chained via the lower-channel-group 7630 (s). Eight address lines are brought in through J1. Four of these, representing the least significant digit on the thumbwheel switches of the 7610-C (or, in the local mode, on the thumbwheel switches of the 7610-R) are connected directly to the relay select boards to select one of ten channels. Another three address lines, representing the most significant digit of the thumbwheel switches, are connected to the relay group decode and group identifier switches on the Relay Select Logic Board to select one of eight groups of ten channels (only two groups are handled by anyone 7630). The first group of ten channels is reserved for the 7610-R relays. The appropriate 7630 identifier switches must be turned on at the time the 7630 is installed to identify which group of ten channels is assigned to each relay board. Along with the three address lines is an enable line which disables the relay select circuitry during power-up; it also deenergizes the relays for a period of time during channel change, so that the previous channel's relay contacts are fully open before the next channel's relay is selected.

When optional analog scanners are used, they plug into the relay boards and connect to both the relay boards and rear panel connectors J3 and J4 as shown on the block diagram.

Unregulated DC power is brought in from the 7610-R and regulated to +5 volts for supplying all the 7630 TTL circuitry.

4.2 7610-C Mother Board. (Figure 6-1-3)

4.2.1 Transmit Circuits.

Inputs from the front panel UP/ON, DOWN/OFF, and CHANNEL SELECT switches enter through J10, and similar inputs from external devices via rear panel EXTERNAL CONTROL connector enter through J11. When the front panel EXTERNAL CONTROL switch is off, it places a logic 1 on pin 1 of multiplexers U7 through U9 to cause them to select their B inputs, and thus switch through the inputs from the 7610-C front panel switches. In the ON position of the EXTERNAL CONTROL switch, pin 1 of the multiplexers is connected to ground through R21 to select the A inputs and thus switch through the external inputs.

The data from the multiplexers is parallel loaded into shift registers U11, U12, and U13. U11 takes the DOWN bit at pins 5 and 12, and the UP bit at pins 11 and 6. The channel bits are loaded into both U12 and U13 for redundancy to improve reliability. A TELE FAIL bit from the telemetry fail circuitry (described later) is also applied to U12 and U13. Site select bits are also loaded into U11. When multiple site operation is desired, a special box with selector switches is connected to J9 to provide the desired site information. If there are no site select inputs at J9, bits C, D, E, and F of U11 will be at logic 1; in this case jumper wires are used on the 7610-R to provide logic ones so that there is always a valid compare.

The transmit inputs (TX1 through TX8) of UART U17 comes from the serial outputs of shift registers U10 through U13 and from similar shift registers on the optional 7615-C (s), when used. The THRL input to the UART, which is generated by U16, loads the outputs of the

www.SteamPoweredRadio.Com

shift registers in the UART at a 1.3-Hz rate. Shift register bit H is the first to be loaded into the UART (see top row of Table 4-1). When the transmitter register is empty, the TRE output of the UART will deliver a pulse to the THRL input to load the next outputs of the shift registers (second line of Table 4-1). However, at the end of the eighth loading, shift register U10 will produce a logic 1 output from its A input, and this will set flip-flop U15 and turn off gate U27, preventing another loading. When U16 clears U15, UART loading can again start. After each parallel loading of the UART, the data is clocked out by the transmit clock at pin 40 of U17 and the data is delivered serially from pin 25 to the FSK modem through J4-10. Timing of the transmit cycle is shown in Figure 4-1.

Since the transmit rate for the data from the 7610-C to the 7610-R is 150 baud and the receive rate from the 7610-R to the 7610-C is 300 baud, two independent clocks are required by the UART. U5 is the clock generator, and it operates at 4800Hz. Diviser U6 provises a 2400-Hz output at pin 14, and a 300-Hz output at pin 11. The UART receive clock at pin 17 of U17 is normally connected through a jumper from pad B to pad A (near U6 in Figure 6-1-3) to the 4800-Hz output of U21-10. The UART transmit clock (pin 40 of U17) is normally jumpered from pad D to pad F to the 2400-Hz output of U6. In some installations it may be possible to operate the uplink at 300 baud, in which case pad D is jumpered to pad E to provide a 4800-Hz clock to the UART transmitter (consult factory for further information).

4.2.2 Receive Circuits.

Serial data from the 7610-R enters the 7610-C Mother Board through pin 8 of J4 and is shifted into the UART through its RI terminal. After loading, the UART sets its DR line high. This feeds through U24-3, U27-8, and U31-12 to the shift clock inputs of shift registers U23, U25, and U26; it also provides a shift pulse to the 7615-C (when installed) through pin 9 of J8. The data from RX1 through RX8 of the UART is shifted into the shift registers as described in Section 4.1.1.

After all the shift pulses are received, a sync pulse is received from pin 5 of U17. The sync pulse is ANDed with a pulse derived from the DR pulse. U17 is programmed for odd parity by a ground on pin 39; if parity of the received data word is even (parity error), pin 13 will go high. Likewise, if there is no valid stop bit, the framing error output (pin 14) will go high. If there is no parity error or framing error, U19 will not be set, and the $\overline{Q}$ output of U19 will be high. ANDing this with the pulse from U24-8 produces a latch pulse, which is delivered through inverter U28-2 and inverter-drivers U28-8 and U30-6 to the Display Board for latching the received data into the display registers and optional external BCD OUT. The latch pulse is also used for the following purposes:

a. It clocks the polarity data bit into U19-5 for the display.

b. It is sent through inverter-driver U28-10 to the optional 7615(s) to latch the received data into registers there.

www.SteamPoweredRadio.Com

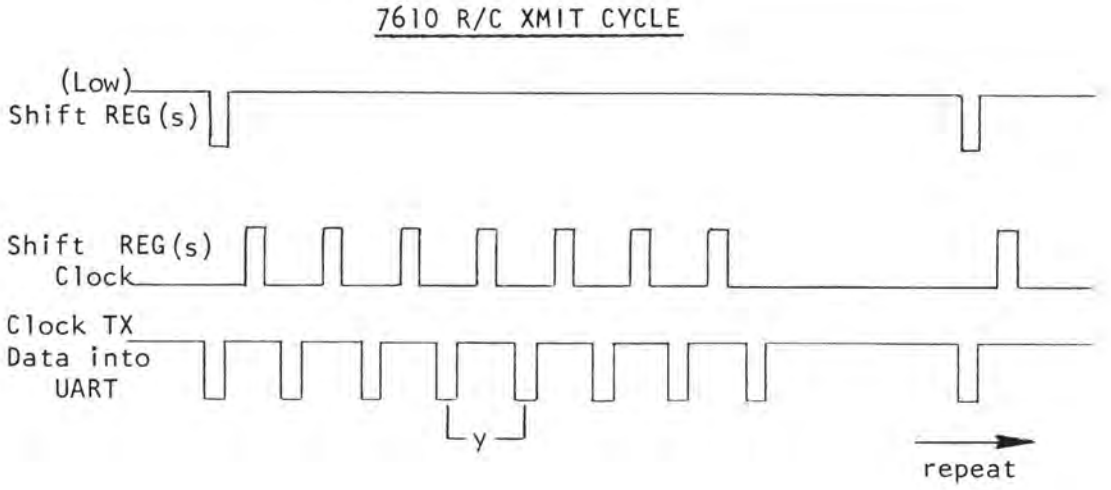

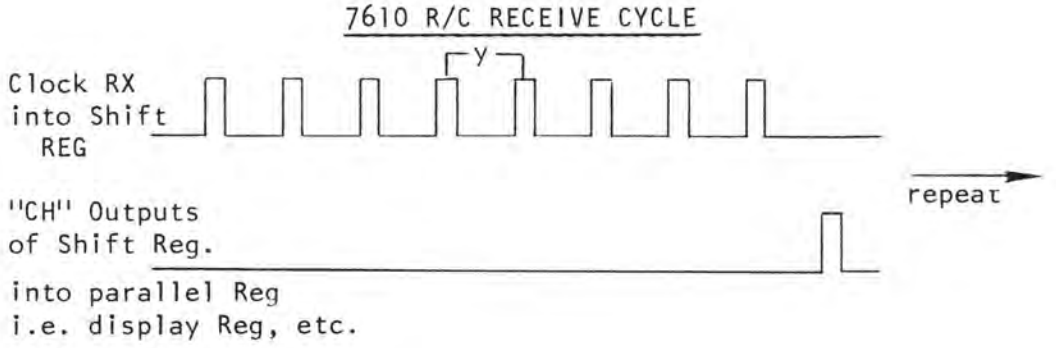

NOTE: There are eight y times during a complete XMIT or REC Cycle. During each y time the UART is sending or Receiving serial data as follows:

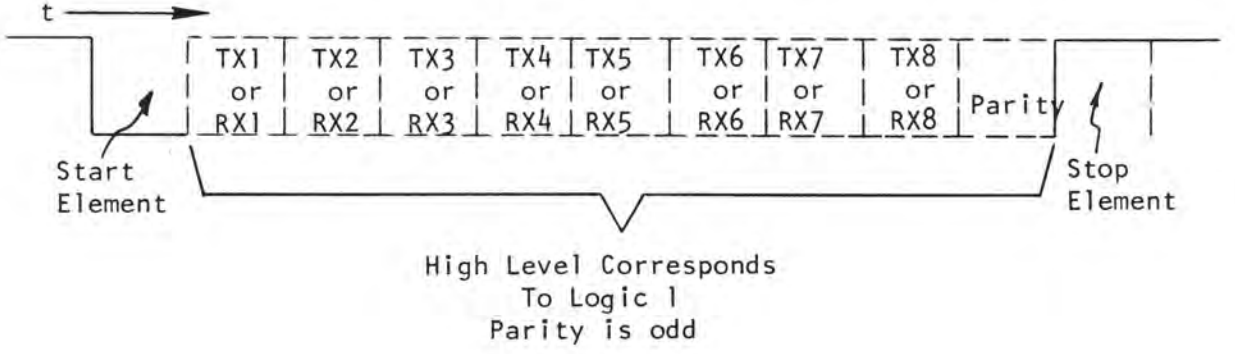

Figure 4-1. Timing Diagram

www.SteamPoweredRadio.Com

c. It is applied through emitter follower Q2 to the base of switch Q1. C27 charges through R38, but as long as latch pulses are received regularly, Q1 will prevent C27 from fully charging. If, however, latch pulses are not received for a period of approximately 10 seconds, C27 will charge to +5 volts and thus apply a logic 1 through U29-3 as a TELE FAIL signal. This signal is fed to the display for driving the TELE FAIL LED. The TELE FAIL output of U29-3 is also sent to shift registers U12 and U13 for incorporating into the data transmitted to the 7610-R, and to TELE FAIL terminal J12 on the rear panel of the 7610-C.

d. It clocks the received UP and DOWN data from pins 13 and 12 of shift register U23 into flip-flops U22-9 and U22-5 for driving the front panel UP and DOWN verification lamps through the open-collector drivers in U20.

4.2.3 Communication Link Switching.

The switches in DIP switch assembly S1 are used for selecting the proper signal paths for the communication link used (see Figure 6-3 and Table 2-1). U14 is an amplifier for the transmitted FSK from the modem. Its gain is adjusted by R29 for an output of 0 dBm into 600-ohm transformer load. T1 is the TELCO transformer, used for both uplink transmission and downlink reception.

4.2.4 Power Supply.

The primary of power transformer T2 is normally wired for 115-volt operation as shown in Figure 6-1-3, but can be wired for 230 volts on special order. Full-wave rectifier CR2/CR4 with regulator U1 and filter capacitors C11 and C12 supplies regulated +12 volts DC to the 7610-C Mother Board and connected boards. Full-wave rectifier CR1/CR3 with regulator U2 and filter capacitors C13 and C14 supplies - 12 volts DC to the 7610-C Mother Board and connected boards. Full-wave rectifier CR5/CR6 supplies DC voltage to regulators U3 and U4. The +5V output of U3 is used for 7610-C Mother Board circuits, and the +5V output of U4 goes to the Display Board.

4.3 7610-C Display Board. (Figure 6-1-4)

U1 through U6 are combined latches and BCD decoders. The latches serve as holding registers for the received data from the 7610-C Mother Board, and the decoders drive the seven-segment displays DS1, DS2, and DS4 through DS7. The latch pulse for the latches comes from the 7610-C Mother Board through pin 4 of J2.

DS1 and DS2 are the CHANNEL VERIFICATION displays; DS1 is the most significant digit, and has a maximum count of 7. DS4 through DS7 are the TELEMETRY DATA displays; DS4 is the most significant digit and has a maximum count of 3. The segment lettering for DS1 is typical of all the seven-segment displays, and is explained in the lower portion of the diagram.

www.SteamPoweredRadio.Com

DS3 is the polarity display for the telemetry data. The horizontal segment (minus) is kept on continuously through pin 8. When a logic 1 is received from the 7610-C Mother Board at pin 16 of J1, corresponding to a plus sign, Q2 is turned on and so lights the vertical segment.

Q1 is the driver for TELE FAIL LED CR1. A logic 1 from the 7610-C Mother Board turns on the LED.

The 26-pin connector, J3, is connected to the optional rear panel 25 pin BCD OUTPUT Connector J19 when that option is selected. This allows the use of an external monitoring device. The latch pulse at pin 13 of J3 is identical with the latch pulse at pin 4 of J2, but comes from a separate inverter-driver on the 7610-C Mother Board.

4.4 7610-R Mother Board. (Figure 6-2-3)

4.4.1 Receive Circuits.

When the TELCO communication option is selected, the FSK control signal from the 7610-C enters the 7610-R Mother Board through pins 2 and 3 of J11 (Sheet 1 of Figure 6-2-3). It is fed through T1 and switch 6 of S1 (which will be closed -- see Table 2-1) to pin 11 of J8. From here, the signal goes to the FSK Modem Board, where it is converted to a TTL-level signal (see Section 4.8) and returned through pin 8 of J8 to the receiver in (RI) terminal of UART U28 (Sheet 2 of Figure 6-2-3). If an SCA communication option is selected, the received signal at rear panel CONTROL IN connector J18 will be detected on the SCA Board (see Section 4.9) and routed through switch 7 of S1 and pin 11 of J8 through the FSK Modem Board to the RI terminal of the UART.

The UART processes the data as described in Section 4.1.2. U31, U32, and U33 are shift registers for the data out of the UART. The UP/DOWN information in U33 is processed by U36, U64-4, and U64-2 to ensure that both UP command bits or both DOWN command bits have been received, but not UP and DOWN commands simultaneously. If both UP bits are received, a logic 1 is delivered to pin 6 of U39. If both DOWN bits are received, a logic 1 is delivered to pin 11 of U39.

If multisite operation is used, the site identification jumpers are set for the binary code number that represents the site at which the 7610-R is installed. If multisite operation is not used, the jumpers are connected to +5 volts to give a 1111 code number to agree with that set in the 7610-C. The received site code from output pins 5 through 11 on U33 are compared in U35 with the jumper settings; if they compare, a logic 1 is delivered to pin 13 of U61.

The contents of U32 and U31 (channel select information) are compared in U34 and U37. If they compare, a logic 1 is delivered by pin 3 of U37 (Sheet 3 of Figure 6-2-3) to AND gate U61-10 to gate through the sync pulse from RX8 of the UART at pin 6 of U61. When the site compare is high (see preceding paragraph), the sync pulse will be gated through U61-11, to be used as the clocklatch pulse for register U38/U39. The inputs to U38 will be the six most significant bits of the

www.SteamPoweredRadio.Com

channel select word. The output at U39-2 will be the least significant bit of the channel select word, the TELE FAIL bit at U39-5; the UP command bit at pin 7; and the DOWN command bit at pin 10. When the RX8 sync pulse is received, the channel select word is applied to 2-to-1 multiplexers U40 and U41.

When LOCAL MODE pushbutton S3 is depressed, +5V is applied to pin 1 of U40 and U41 to cause these multiplexers to select their B inputs, which come from the 7610-R front panel CHANNEL SELECT switches. When S3 is not depressed, the multiplexers select their A inputs, which are the channel select bits from register U38/U39. The selected multiplexer outputs are applied through CMOS-to-TTL buffers U46 and U47-11 to the 7-bit register consisting of U48 and U50-9. U49, U52-6, U45-11, and U45-6 constitute a 7-bit digital comparator for the purpose of detecting a change in channel selection. If there is no compare (U45-6=high level), flip-flop U50-5 will become set by a 1200Hz clock signal from U45-8. With U50-5 set, U50-6 will be low (Logic 0) and so the Enable signal from U45-3 will be high. This will cause the channel relay which had been selected to be deenergized. Also when U50-5 becomes set (high out), the 4 bit counter U51 will be enabled to count up to 1111 (15 count). At a count of 1111, U51-15 will provide a positive pulse which will clock the inputs of U48 and U50-9 into these registers. U45-6 should now provide a compare (low level). U50-5 will be reset with the next positive edge 1200Hz clock signal and thus clear and disable counter U51. The Enable signal at U45-3 will now be low to allow the new relay to be selected. The circuitry just described provides approximately 12 milliseconds of relay deenergizing time before a new relay can be selected, either in the 7610-R or 7630 (s).

The four bits of the least significant digit of the channel number out of register U48 are applied to decoder U55 to select (Logic 0) one of the 10 output lines corresponding to the selected channel number. The selected output energizes a relay for the selected channel on the Relay Board through one of the open-collector drivers U56 and U57. The four U53 gates comprise a decoder which produces a logic 0 at pin 4 of U53 if the most significant digit of the channel select number is 0. This enables decoder U55, so that one of ten relays on the 7610-R Relay Board can be selected. The outputs of register U48/U50 are also fed to 7630 (s), if used, via J3 for selection of higher channel numbers.

The UP and DOWN bits at pins 7 and 10 of register U39 are applied to two open-collector drivers on U44. When not in local mode, these drivers are enabled, and select (Low Level) UP relay coil K1 (if the UP bit is high) or DOWN relay coil K2 (if the DOWN bit is high). When LOCAL MODE switch S3 is depressed, pins 2 and 7 of U44 are grounded to disable the drivers. The relays are then operated by the 7610-R front panel UP/ON or DOWN/OFF switches S1 and S2. The relay contacts are connected to the Relay Board through J1 to furnish UP or DOWN contact closures for the selected channel.

The TELE FAIL bit at pin 5 of U39 is applied to a driver on U58 to provide a +12V output at rear panel terminals when there is a failure of the downlink telemetry. U58 also drives a relay to provide

If You Didn't Get This From My Site,
Then It Was Stolen From...
www.SteamPoweredRadio.Com

contact closure at rear panel terminals when the 7610-R is in local mode.

When there is channel comparison, the end-of-word sync pulse at pin 8 of U61 is applied through amplifiers Q10 and Q9. As long as pulses are received, C42 will remain discharged and thus K4 will remain energized. If there is a failure in channel comparison or a failure to receive sync pulses for longer than 20 to 55 seconds (R58 Ajustable) K4 will deenergize and open its contacts, which are connected to the rear panel CONTL FAILSAFE terminals.

Basic 4800 Hz timing for the 7610-R is generated by U42. Its output is divided by counter U43 to give 2400 Hz, which is connected by a jumper from pad F to pad D to supply the UART receive clock. For certain special applications, the receive clock can be jumpered to the 4800 Hz output of U42-5. The UART's transmit (SEL) clock is normally jumpered to the 4800 Hz line, but in special applications it can be jumpered to the 300Hz output of U43.

4.4.2 Transmit Circuits.

The selected telemetry analog voltage to be transmitted to the 7610-C enters the Mother Board at pins 1 and 14 of J1 or pins 2 and 14 of J3 (for 7630) (Figure 6-2-3, Sheet 3), and is fed to the input of U19 (Figure 6-2-3, Sheet 2). U19 is the analog portion of an analog-to-digital converter (ADC), the digital portion of which is U12. Although the voltage across the TELE inputs is not more than 4 volts DC, the lines may be at a high voltage with respect to ground; so the circuitry associated with U19 operates against floating ground that is not connected to chassis or normal signal ground, and the inputs and outputs are made through optical isolators (U9, U10, and U11).

NOTE

Floating Ground is indicated by ⏚ rather than ⏚.

There are two control signals feeding U19, which come from U12 -- measurement cycle/zero cycle (M/Z) and UP/DOWN (U/D). The Analog to Digital Converter goes through a cycle in which it zeros itself out. Then it goes into a measurement cycle. U12 performs all the control. A 20,480 Hz clock from U13 is fed into U12. The UP/DOWN output of U12 controls a FET switch in U19 which switches between ground and a reference voltage set by Q5 and Q6. The output from the FET within U19 is summed with the analog input voltage and is applied to an integrator within U19. The output of the integrator is compared to a stored voltage from the previous zero cycles by a comparator within U19. The output of the comparator (U19-5) is used by a time base counter within U12 to accumulate a count proportional to the input voltage.

U15 through U18 constitute the output register from the A-D converter. U15 stores the least significant digit, and U18 the most significant digit. U18 stores only two bits of data plus the sign (polarity) bit. After a measurement cycle, U12 will have accumulated a net count in internal latches. U12 then multiplexes the BCD information

www.SteamPoweredRadio.Com

out one digit at a time. The BCD data strobed into the four registers by outputs D1 through D4 of U12, in the following order: D1, D3, D2, and D4. Data at the output of the registers stays the same until input data changes. The register outputs are supplied to shift registers U24 and U25, and are also fed to the 7610-R Display Board and will be displayed when the 7610-R is in local mode.

The four registers, U15-U18 have tristate outputs. When an optional BCD Interface is plugged in, it will furnish a disable signal at pin 3 of J7 when channel 9 (or channels 8 and 9, depending on the option installed) is selected. The disable signal is applied to pins 1 and 2 of U15-U18 registers to turn off their outputs, so that the display will show what is coming from the BCD Interface rather than from the registers.

The M/Z output of U12, whose frequency is the clock frequency of 20,480 Hz divided by 6144 or 3.33 Hz, is also fed through Q1, U22-4, and a jumper from A to B to clear flip-flop U29 and to load UART U28. B is jumpered to C for a special option. The pulse is also used to load the parallel data from registers U15 through U18 into shift registers U24 and U25, and to load 7615-R shift registers, when used. Shift register U26, which is also loaded by the resulting M/Z pulse, is used to convert the channel verification data from multiplexers U40 and U41 and the UP/DOWN verification data from U65-2 and U65-4 to serial data for the UART (Figure 6-2-3, Sheet 2) (Channel 1 verification actually goes to U25). The three shift registers feed TX1, TX2, and TX3 of the UART. TX4 through TX7 are fed by the 7615-R (s), when used. U27 generates the sync pulse for TX8. Operation of the UART is described in Sections 4.1.1 and 4.1.2. Its serial output from pin 25 is routed through the closed second switch of switch assembly S1 (Figure 6-2-3, Sheet 1) to the FSK Modem Board.

4.4.3 Communication Link Switching.

The switches in DIP switch assembly S1 are set in accordance with Table 2-1. U8 is the output amplifier for the TELCO link or for the input to an optional SCA Generator. T1 is the TELCO line transformer, for both transmitting and receiving.

4.4.4 Power Supply.

The primary of power transformer T2 is normally wired for 115 volt operation as shown in Figure 6-2-3, Sheet 1, but can be wired for 230 volts on special order. Full-wave rectifiers with regulators provide all the outputs, except that one 12 volt output (+12VX, for the relays) and a +9V output (to J3 pin 4, for the optional 7630) are unregulated. The floating outputs (+5VF, +12VF, and -12VF) are for the floating A-D circuitry shown on Sheet 2 of Figure 6-2-3.

4.5 7610-R Display Board. (Figure 6-2-4)

DS2 through DS5 are the 7-segment displays. They are driven by BCD data from the 7610-R Mother Board via decoders U1 through U4. The decoders are enabled by a +5V level at pin 9 of J2 when the

www.SteamPoweredRadio.Com

7610-R front panel LOCAL MODE switch is depressed. DS1 is the polarity display. Its horizontal segment (minus sign) is always on. When a logic 1 is received at pin 10 of J2, Q1 turns on the vertical segment to produce a plus sign.

4.6 7610-R Relay and Barrier Strip Boards. (Figure 6-2-5)

The Relay Board contains the ten relays for the ten channels to be selected. All relay coils are supplied with +12 volts, and the selected coil is effectively grounded in the 7610-R Mother Board. Each relay has three pairs of contacts -- one for UP/ON control, one for DOWN/OFF control, and one for telemetry analog voltage input. R1 through R10 are the analog voltage calibration potentiometers.

The Barrier Strip Board plugs into the Relay Board and furnishes the rear panel terminals for output control contact closures and input telemetry analog voltages.

4.7 7610-C FSK Modem. (Figure 6-1-5)

In the generator portion of the modem, U1 is an oscillator whose frequency is determined by C1, C2, R2 and R3. When a logic 1 is received from the UART on the 7610-C Mother Board through pin 10 of J1, Q1 switches C1 in parallel with C2. With Q1 on, R3 is adjusted for an oscillation frequency of 250 Hz. When a logic 0 is received, C1 is removed from the circuit, and the frequency is then 400 Hz. U2-1, U2-7, and U9 are Low-pass active filters for the FSK output to the 7610-C Mother Board, where it is routed to the communication uplink (see Figure 6-3).

In the detector portion of the modem, U3 through U6 provide band-pass filtering with a combined pass band of 775 to 1125 Hz. The gain from pin 11 of J1 to pin 1 of amplifier U7 is approximately 31 dB. CR1 through CR4 are limiters. U8 converts the FSK signal to a TTL-signal, which is delivered to the UART on the 7610-C Mother Board through pin 8 of J1. CR5 is a received-level detector, whose output is available at the REC LEVEL test points on the 7610-C rear panel. A voltage in the range of 1.5 to 10 volts nominally indicates a satisfactory received signal. R54 is used to tune the FSK detector for proper frequency response.

4.8 7610-R FSK Modem. (Figure 6-2-7)

This modem is basically the same as the 7610-C modem (Section 4.7), but the frequencies are different. In the generator portion, the low FSK frequency is 800 Hz and the high FSK frequency is 1100 Hz. The two U2 operational amplifiers with associated circuitry comprise a low-pass active filter, and U9 with its circuitry is a high-pass filter.

In the detector portion, the combined pass band of band-pass active filter U3 through U6 is 225 to 425 Hz. The gain from pin 11 of J1 to pin 1 of U7 is approximately 31 dB.

www.SteamPoweredRadio.Com

4.9 SCA Generator and Detector Board. (Figure 6-1-6)

This board is used with both the 7610-C and 7610-R. All frequencies-determining components are factory selected for the customer's SCA frequencies in accordance with the table at the bottom of Figure 6-1-6. The upper portion of the schematic is the SCA detector. The SCA input at pin 12 of J1 is fed through a high-pass filter to the demodulator, U1. R3 adjusts the center frequency of the demodulator. The FSK output of U1 is fed through low-pass filter U2 to remove any high-frequency components of the SCA signal, and through amplifier U3 to the FSK Modem via pin 11 of J1.

The FSK input at pin 8 of J1 is applied to the SCA generator, U4, through R1, which sets the amount of frequency deviation (normally ±6kHz). The FSK-modulated FM triangular wave signal from U4 is fed through low-pass harmonic filter U5 and amplifier U6 to the Mother Board, where it is routed to the rear panel CONTROL OUT connector (7610-C) or TELEMETRY OUT connector (7610-R). Potentiometer R2 allows adjustment of the output between 0 and 800 mv rms.

4.10 BCD Interface Board. (Figure 6-2-6)

This option is installed at the remote site when it is desired to introduce external BCD data on Channel 9 or Channels 8 and 9 in place of the digital-converted analog voltages normally transmitted on those channels. The BCD inputs come from BCD CH8 (J15) and BCD CH9 (J16) connectors on the 7610-R rear panel, and are applied to tristate drivers U3 through U7 and U9. When Channel 9 is selected, a logic 1 from the relay select logic on the 7610-R Mother Board is applied through J1 pin 2 and inverter U8-10 to the enable inputs of drivers U3 through U5, and thus deliver their activated outputs to J2. When the Channel 8 jumper is installed on the BCD Interface Board, a Channel 8 select input from the 7610-R relay select logic will similarly enable U6, U7, and U9 to deliver their activated outputs to J2. The BCD outputs from J2 are routed to shift registers U24 and U25 on the 7610-R Mother Board for loading into the UART and transmission to the 7610-C. The BCD outputs will also be displayed on the 7610-R Telemetry Data display when in Local Mode.

When either Channel 8 or Channel 9 is selected, NOR gate U8-1 and inverter U8-4 on the BCD Interface Board deliver a disable signal to the analog-to-digital converter output register U15 through U18 on the 7610-R Mother Board, so that the inputs from the BCD Interface Board rather than the ADC outputs are sent to the 7610-C by the UART.

4.11 7615-C Direct Control. (Figures 6-4-3 and 6-4-4)

On/off inputs are received from the front panel CONTROL switches or from the rear panel CONTROL terminals. A switch that is on, grounds its line; otherwise the line is maintained at +5 volts through one of the pull-up resistors (R31 through R45). Capacitors C41 through C55 are noise filters. The inputs are inverted in U15, U16, and U17, and applied as parallel inputs to shift registers U18 and U19. The load

www.SteamPoweredRadio.Com

pulse and shift pulse are generated by the 7610-C. The data is shifted out serially from pin 9 of U18 and U19 through inverters U1-2 and U1-8 and switches S1D and S1C to the 7610-C UART for transmission to the remote site. In the first 7610-C installed, S1D and S1C will be set to POS 1, which will send the serial data out over the DI1 and DI2 lines to the 7610-C. In the second 7615-C, the switches will be in the POS 2.

When status data is received from the remote site by the 7610-C, eight bits of it is delivered to the 7615-C over the DO1 line and eight bits over the DO2 line, if it is the first 7615-C; or over the DO3 and DO4 lines if it is the second. The eight bits on DO1 or DO3 are shifted into U5; and then that 8-bit word is shifted into U3 while the next word is shifted into U5. Likewise, data from DO2 or DO4 is shifted into U6 and U9. U7 compares four of the bits stored in U5 with four corresponding bits in U3. At the same time, U8 compares the four other bits in U5 with corresponding bits in U3. If U7 and U8 gets a compare, it produces a carry output at U8-3 which is delivered to U10-6. U10 and U11 compare the bits in U6 and U9. If all four comparators (U7, U8, U10, U11) get valid compares, U11 delivers a logic 1 to pin 5 of U4. Then when a latch pulse is received from the 7610-C through pin 7 of J1, the data from U3 and U9 will be clocked into the holding register consisting of U12, U13, and U14.

Two latch pulses were required to shift the data into U5 and then into U3, so that there will be two latch pulses out of U4 pin 6. So if data does not change, there is a latch pulse every eight bits; but if data changes, there is a latch pulse from U4-6 every 16 bits. The outputs of the holding register are applied to drivers Q1 through Q15, which drive front panel STATUS LEDs CR1 through CR15 (see Figure 6-4-4). The driver outputs at J7 and J8 of the 7615-C Mother Board also connect to the STATUS terminals on the 7615-C rear panel.

U4-8 and associated circuitry apply a logic 0 to the CLR inputs of the registers to clear them when power is first applied.

The power supply for the 7615-C (Figure 6-4-5) consists of a full-wave rectifier and an IC regulator to supply +5 volts to the Mother Board and front panel board.

4.12 <u>7615-R Direct Control.</u> (Figure 6-5-2 and 6-5-3)

The control data received from the 7615-C via the 7610-R is fed through rear panel connector J1 and enters the Mother Board at J1. It is processed in the same way as the received status data in the 7615-C (see Section 4.11). Switch S1 must be set to POS 1 or POS 2, depending on whether the 7615-R is the first or second installed. When the 7615-R is not in local mode, each logic 1 bit at the output of holding registers U12, U13 and U14 will energize its relay (K1 through K15) through its driver (Q1 through Q15). The relay contacts are connected to the rear panel CONTROL terminals for operation of external devices. A switch closure on the front panel of the 7615-C results in a relay contact closure at the 7615-R rear CONTROL terminals.

If, however, the 7615-R front panel LOCAL CONTROL/REMOTE

www.SteamPoweredRadio.Com

CONTROL switch S16 (see Figure 6-5-4) is in the LOCAL CONTROL position, pins 5 and 6 of J12 on the Mother Board will be connected together placing the cathode of CR4 at -0.7 volts. This voltage disables Q1 through Q15, so that the outputs of U12, U13, and U14 are not effective. In the local mode, switch S16 places a ground on the common bus of front panel CONTROL switches S1 through S15, so that they can energize relays K1 through K15. S16 also delivers a contact closure to the rear panel LOCAL WARN terminals for operation of an external device.

The status inputs, which may be contact closures or TTL zeros for the active state, are brought in from the rear panel STATUS terminals through J3 and J4 of the 7615-R Mother Board. They are processed in the same way as were the CONTROL inputs to the 7615-C (see Section 4.11). Load and shift pulses for the shift registers U18 and U19 come from the 7610-R, and the shift register outputs are delivered to the 7610-R UART on the DI1 and DI2 or DI3 and DI4 lines, depending on the position of switch S1.

The status bits out of inverters U15, U16, and U17 are also sent to the 7615-R front panel STATUS LEDs CR1 through CR15 (see Figure 6-5-4).

The Power Supply Board (Figure 6-4-5) furnishes regulated -12 volts for the local disable signal, unregulated +9 volts for the relays, and regulated +5 volts for the other circuits.

4.13 <u>7630 Channel Expansion.</u> (Figures 6-2-5 and 6-6-3)

The 7630 contains a Relay Select Logic Board (Figure 6-6-3) and two Relay Boards identical to the one in the 7610-R (Figure 6-2-5). Relay control comes through J1 on the 7630 rear panel, which is connected to the 7610-R or the next lower 7630. The signals and power on J1 are brought into the Relay Select Logic Board through J4. The enable line at pin 16 of J4 disables the relay select circuitry during power-up and during channel change. E,F, and G represent the MSD in the channel number. They are applied to U8, which decodes them into 1 of 7 outputs (Channel 10-79). One switch on switch assembly S1 and one on S2 are closed when the 7630 is installed to identify each 10-channel relay board. When there is an output from U8 on a line that is switched through S1, U5 will be enabled. Likewise, U6 will be enabled by an output from U8 corresponding to one of the closed switches on S2.

A, B, C, and D represent the LSD in the channel number. They are applied to U5 and U6. When one of these decoders is enabled, it decodes the 4-bit input into 1 of 10 outputs to select 1 of 10 relays on the Relay Board associated with that decoder. U5 drives Relay Board 2, which is the right-hand board in the 7630; and U6 drives Relay Board 1, the left-hand board.

The TELE + and TELE - analog input from the Relay Boards at J1 and J2 and the Relay Select Logic Board, as well as the UP and DOWN output to the Relay Boards, are connected to the 7610-R via J4 where they are bussed with the inputs and outputs of the Relay Board in the 7610-R and possibly other 7630s.

www.SteamPoweredRadio.Com

Power from the 7610-R at 9 volts unregulated is regulated by U7 for the +5 volts needed on the Relay Select Logic Board. +12vdc unregulated, required by the relay coils is also supplied by the 7610-R.

The Relay Boards are described in Section 4.6.

www.SteamPoweredRadio.Com

SECTION 5

MAINTENANCE

WARNING

High voltages may be present when the 7610-R and/or 7630 (s) are connected to transmitter metering circuits. Disconnect the unit from the transmitter and use extreme caution when servicing.

5.1 General.

Since the Models 7610, 7615 and 7630 use solid-state circuitry and their power requirements are low, no maintenance problems due to high temperature should be encountered, provided the units are installed well away from vacuum-tube and other heat-generating equipment. Likewise, because the operating voltages are low, excessive dust accumulation associated with high-voltage devices should not occur.

All integrated circuits and most other components are accessible by removing the top cover of the 7610, 7615, or 7630. The 7610-C and 7610-R units have removable bottom covers so that there is access to the bottom of the Mother Board. If it becomes necessary to gain access to the bottom of the Mother Board of the 7630 or 7615 for soldering or other purposes, disconnect all cables to the board, remove the screws holding the board to the standoffs, and remove the board.

Table 5-1 lists pin assignments for the 25-pin, 26-pin, and 15-pin connectors. When a cable runs between a 26-pin connector and a 25-pin connector, pin-26 is unused. When a cable runs between a 16-pin connector and a 15-pin connector, pin-16 is unused. The pin layout is shown below. A strip on the flat cable identifies pin-1.

26-Pin Connector Head-On to Mother Board

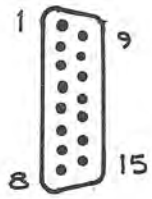

15-Pin D Connector Head-On to Rear Panel

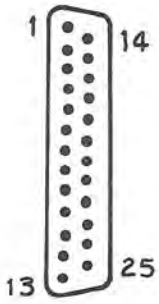

25-Pin D Connector Head-On to Rear Panel

If You Didn't Get This From My Site,
Then It Was Stolen From...
www.SteamPoweredRadio.Com

Pin	7610-C to 7615-C J8 on 7610-C MB J18 on 7610-C RP J1 and J2 on 7615-C RP J1 on 7615-C MB	External Control J11 on 7610-C MB J17 on 7610-C RP	BCD Out J3 on 7610-C DB J19 on 7610-C RP	Site Select J9 on 7610-C MB J16 on 7610-C RP	7610-R to 7615-R J2 on 7610-R MB J21 on 7610-R RP J1 and J2 on 7615-R RP J1 on 7615-R MB	7610-R to 7630 J3 on 7610-R MB J23 on 7610-R RP J1 and J2 on 7630 RP J3 and J4 on 7630 RSLB	BCD Input(CH8,CH9) Two connectors on BCD Interface Board J15 and J61 on 7610-R RP
1	DØ3	CH40	CH10	Bit 2	DØ3	GND	NC
2	DØ4	CH20	CH20	GND	DØ4	TELE -	POL
3	GND	CH10	CH40	Bit 3	GND	GND	1000
4	LOAD	CH8	POL	GND	LOAD	+9V	GND
5	GND	CH4	1	Bit 1	GND	+12V	400
6	SHIFT IN	CH2	2	Bit 0	SHIFT IN	C	100
7	LATCH	CH1	4	NC	LATCH	A	NC
8	GND	NC	8	NC	GND	F	40
9	SHIFT OUT	UP	10	NC	SHIFT OUT	NC	10
10	GND	NC	20	NC	GND	DOWN A	NC
11	DI1	DOWN	40	NC	DI1	DOWN B	4
12	DI2	NC	GND	NC	DI2	UP A	1
13	NC	EXT CONT	LATCH	NC	NC	UP B	NC
14	DØ2	GND	CH1	NC	DØ2	TELE +	NC
15	DØ1	NC	CH2	NC	DØ1	GND	GND
16	GND	NC	CH4	NC	GND	ENABLE	2000
17	NC	NC	CH8		NC	+0V	GND
18	GND	NC	1000		GND	D	800
19	GND	NC	2000		GND	B	200
20	GND	NC	100		GND	G	GND
21	GND	NC	200		GND	E	80
22	NC	NC	400		NC	DOWN A	20
23	GND	NC	800		GND	DOWN B	GND
24	DI4	NC	80		DI4	UP A	8
25	DI3	GND	GND		DI3	UP B	2
26	NC	NC	GND		NC	NC	GND

NOTE:
MB = Mother Board
RP = Rear Panel
RSLB = Relay Logic Board
DB = Display Board
NC = No Connection
DI = Data Input
DØ = Data Output

TABLE 5-1. PIN ASSIGNMENTS FOR 25/26-PIN AND 15/16-PIN CONNECTORS

www.SteamPoweredRadio.Com

5.2 Periodic Maintenance.

The only periodic maintenance required is cleaning. Once a year, or more often in dusty locations, blow off the dust from printed-circuit boards with compressed air.

5.3 7610-C Calibration Procedures. (If Required)

5.3.1 UART Clock Frequency.

The UART clock frequency can be checked by connecting a frequency counter to pin 17 of U17 on the 7610-C Mother Board. The frequency should be 4800 Hz ±100Hz. If it is not, adjust R2.

5.3.2 TELCO Output Level.

The FSK generator output level from the 7610-C TELCO terminals on the rear panel should be 0 dBm (2.2 volts p-p) when terminated with either a 600-ohm load or the phone line. If there is minimal attenuation over the phone line between the 7610-C and 7610-R, measurement of output level should be made with the 7610-R end output disabled. Disabling may be accomplished by removing the phone line at one end and connecting a 600-ohm resistor across the output to be adjusted.

If it is not desirable to disconnect the phone line in order to disable the output from the 7610-R Mother Board, an alternate method of disabling is to remove the 7610-R FSK Modem Board.

The TELCO output level can be adjusted by means of R29 on the 7610-C Mother Board.

5.4 7610-R Calibration Procedures. (If Required)

5.4.1 UART Clock Frequency.

The UART clock frequency can be checked by connecting a frequency counter to pin 2 of U43 on the 7610-R Mother Board. The frequency should be 4800 Hz ±100Hz. If it is not, adjust R47.

5.4.2 ADC Clock Frequency.

The ADC clock frequency can be checked by connecting a frequency counter to pin 3 of U13 on the 7610-R Mother Board. The frequency should be 20,480 Hz ± 150 Hz. If it is not, adjust R32.

5.4.3 ADC (Analog to Digital Converter) Full-Scale Reading.

a. Connect a voltage of not more than 3 volts dc to an unused pair of terminals on the TELE barrier strip at the 7610-R or 7630 rear panel.

b. Connect an accurate voltmeter across the same pair of terminals.

www.SteamPoweredRadio.Com

c. On the 7610-R or 7630 front panel, turn fully clockwise the calibration potentiometer for the channel being used for the measured input.

d. With the 7610-R in local mode, observe the TELEMETRY DATA display. It should agree with the voltmeter reading, ±3 count (3mv). If it does not, adjust R21 on the 7610-R Mother Board.

5.4.4 Control Failsafe Delay.

To check the operation of the control failsafe circuit, remove any connection to the FAILSAFE CONTL terminals on the rear panel and connect an ohm meter across the two terminals. A short should be indicated. Then disconnect the telephone line at the rear panel TELCO terminals. The ohmmeter should indicate an open circuit after a delay of 10 to 55 seconds. The time delay can be adjusted within the range of approximately 10 to 55 seconds as desired by means of R58 on the 7610-R Mother Board.

5.4.5 TELCO Output Level.

The FSK generator output level from the 7610-R TELCO terminals on the rear panel should be 0 dBm (2.2 volts p-p) when terminated with either a 600-ohm load or the phone line. If there is minimal attenuation over the phone line , between the 7610-R and 7610-C,, measurement of output level should be made with the 7610-C end output disabled. Disabling may be accomplished by removing the phone line at one end and connecting a 600-ohm resistor across the output to be adjusted.

If it is not desirable to disconnect the phone line in order to disable the output from the 7610-C Mother Board, an alternate method of disabling is to remove the 7610-C FSK Modem Board.

The TELCO output level can be adjusted by means of R4 on the 7610-R.

5.5 FSK Modems.

5.5.1 7610-C FSK Modems.

5.5.1.1 FSK Generator Frequency.

If FSK generator U1 on the FSK Modem is replaced or does not appear to be operating correctly, connect a frequency counter to pin 5 of U1 on the FSK Modem Board. On the 7610-C Mother Board turn S1-6 to the OFF position. The frequency at U1 pin 5 should be 400 Hz ±6Hz. If it is not, adjust R3 on the FSK Modem.

With S1-6 still open, connect a clip lead from Modem Board pin 10 to +5vdc on the 7610-C Mother Board. The frequency at U1 pin 5 on the FSK Modem should now be 250 Hz ±20 Hz. Remote the clip lead and return S1-6 to the ON position.

If You Didn't Get This From My Site,
Then It Was Stolen From...
www.SteamPoweredRadio.Com

5.5.1.2 FSK Detector.

If FSK detector U8 on the FSK Modem is replaced or does not appear to be operating correctly proceed as follows. With the 7610-C and 7610-R operating together, connect an oscilloscope to pin 10 of U8 and adjust the oscilloscope vertical sensitivity to 1 or 2 volts per centimeter. Note the DC level at pin 10; it should be approximately +5VDC. Move the oscilloscope probe to pin 8 of U8 and observe the switching signal. Adjust R54 on the FSK Modem so that the excursions of the switching signal are the same above and below the DC level observed at pin 10.

5.5.1.3 FSK Band-Pass Filters.

These filters (U3 through U6 and associated components on the FSK Modem) have adjustments for center frequency and Q. However they should not be adjusted in the field. If adjustment appears to be necessary, consult the factory.

5.5.2 7610-R FSK Modem.

5.5.2.1 FSK Generator Frequency.

If FSK generator U1 on the FSK Modem is replaced or does not appear to be operating correctly, connect a frequency counter to pin 5 of U1 on the FSK Modem Board. On the 7610-R Mother Board turn S1-2 to the OFF position. The frequency at U1 pin 5 should be 1100 Hz ±15 Hz. If it is not, adjust R3 on the FSK Modem.

With S1-2 still open, connect a clip lead from Modem Board pin 10 to +5VDC on the 7610-R Mother Board. The frequency at U1 pin 5 on the FSK Modem should now be 800 Hz ±30 Hz. Remote the clip lead return S1-2 to the ON position.

5.5.2.2 FSK Detector.

The procedure is the same as described in Section 5.5.1.2 for the 7610-C FSK detector.

5.5.2.3 FSK Band-Pass Filters.

As in the 7610-C, these filters are factory-adjusted and should not be adjusted in the field. If adjustment appears to be necessary, consult the factory.

5.6 SCA Generator and Detector.

5.6.1 SCA Deviation (7610-C/7610-R).

The FM deviation is set by R1 on the SCA Generator and Detector Board. This is a factory adjustment, and should not be readjusted in the field unless appropriate FM deviation-measuring equipment is available. Specified deviation is normally ±6 kHz.

www.SteamPoweredRadio.Com

5.6.2 7610-C SCA Detector Frequency.

This frequency is adjusted with the SCA Generator/Detector Board operating in the system. Proceed as follows:

a. Open DIP switch S1-2 on the 7610-C Mother Board.

b. Ground pin 12 of the SCA Generator and Detector Board to a nearby ground.

c. Connect a frequency counter to pin 4 of U1 on the SCA Generator and Detector Board, and adjust R3 for the specified center frequency.

d. Remove the ground and close DIP switch S1-2.

5.6.3 7610-C SCA Generator Frequency and Output Level.

To adjust the frequency and output level with the SCA Generator/Detector Board operating in the system, proceed as follows:

a. Remove U14 on the 7610-C Mother Board.

b. Ground pin 8 of the SCA Generator and Detector Board to a nearby ground.

c. Connect a frequency counter to pin 4 of U4, and adjust R4 for the specified center frequency.

d. Adjust output level potentiometer R2 to meet the requirements of the external equipment, as measured at pin 9 of the SCA Generator and Detector Board or at rear panel SUBCARRIER CONTROL OUT BNC connector.

e. Remove ground and reinstall U14.

5.6.4 7610-R SCA Detector Frequency.

This frequency is adjusted with the SCA Generator/Detector Board operating in the system. Proceed as follows:

a. Remove the BNC cable connected to 7610-R rear panel J18.

b. Ground pin 12 of the SCA Generator and Detector Board to a nearby ground.

c. Connect a frequency counter to pin 4 of U1 on the SCA Generator and Detector Board, and adjust R3 for the specified center frequency.

d. Remove the ground and reconnect the BNC cable to 7610-R rear panel J18.

www.SteamPoweredRadio.Com

5.6.5 7610-R SCA Generator Frequency and Output Level.

To adjust the frequency and output level with the SCA Generator/Detector Board operating in the system, proceed as follows:

a. Open DIP switch S1-5 on the 7610-R Mother Board.

b. Ground pin 8 of the SCA Generator and Detector Board to a nearby ground.

c. Connect a frequency counter to pin 4 of U4, and adjust R4 for the specified center frequency.

d. Adjust output level potentiometer R2 to meet the requirements of the external equipment, as measured at pin 9 of the SCA Generator and Detector Board or at rear panel SUBCARRIER TELEMETRY OUT BNC connector.

e. Remove ground and close DIP switch S1-5.

5.7 7610 C/R, 7615 C/R and 7630 Troubleshooting Guide.

WARNING:

There may be high voltage differences between voltages applied to the 7610-R rear barrier strip assembly and signals within the 7610-R itself. Care also must be taken in troubleshooting the system in its normal configuration because certain external control or monitoring functions may be activated or interrupted.

Before starting troubleshooting procedures, visually inspect the suspected unit, making sure all connectors and integrated circuits are securely in their sockets.

The following guide assumes that the 7610-C and 7610-R are connected together as a pair on the bench along with any optional 7615 C/R and 7630 units that are suspected of failure. This guide assumes that there are no external control or status connections made to the rear panels. Discretion should be used as to whether connections should be removed from all pieces of equipment or to troubleshoot the equipment in place as installed. It certainly is desirable to isolate the problem to a general area before removal from the installation for further checkout on the bench. (For instance it would not be necessary to remove the 7630 if the problem is in the 7610-R. The problem in the 7610-R, for example, may be simple enough to repair in place).

7610-C - 7610-R Interconnect Procedure.

The equipment to be analyzed for trouble should be interconnected as shown on Page 5-8.

www.SteamPoweredRadio.Com

For Telephone Wireline (TELCO) Operation:

a) Connect a twisted wire pair between the TELCO terminals on the Model 7610-C rear panel terminal strip J12 and the Telco terminals Model 7610-R rear panel terminal strip J17. If the telephone interface is questionable connect a 30 db/600 ohm attenuator between the 7610-C and 7610-R as follows:

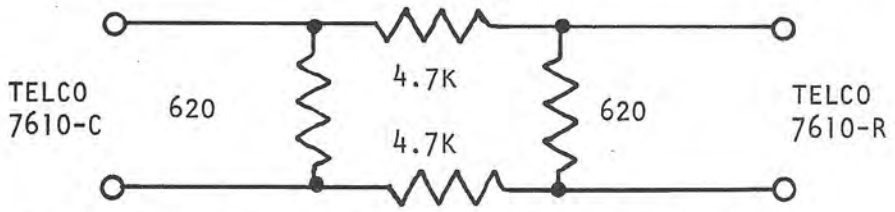

For microwave Uplink (STL) operation and FM Radio Downlink (SCA) operation:

a) Interconnect the Control Out connector J13 on the Model 7610-C to the Model 7610-R Control In connector J18.

b) Interconnect the Telemetry In connector J14 on the Model 7610-C to the Telemetry Out connector J19 on the Model 7610-R.

NOTE:

Communication link requires a SCA generator (modulator) and a corresponding SCA detector (demodulator) either included in the 7610 C/R or external to the 7610 C/R.

www.SteamPoweredRadio.Com

5.7.1 7610 C/R, 7615 C/R or 7630 Does Not Work

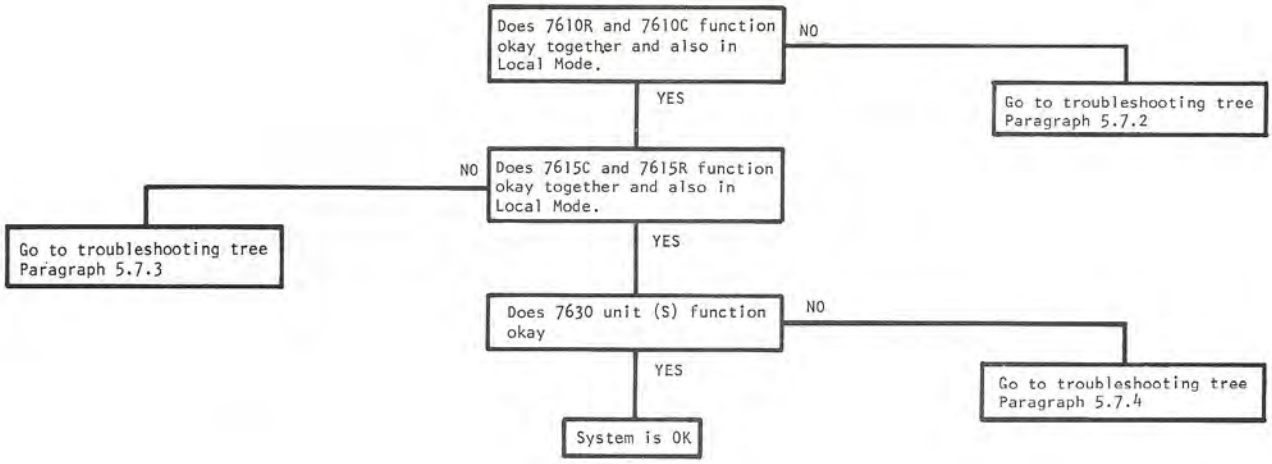

5.7.2 7610R and/or 7610C Fail to Function Properly

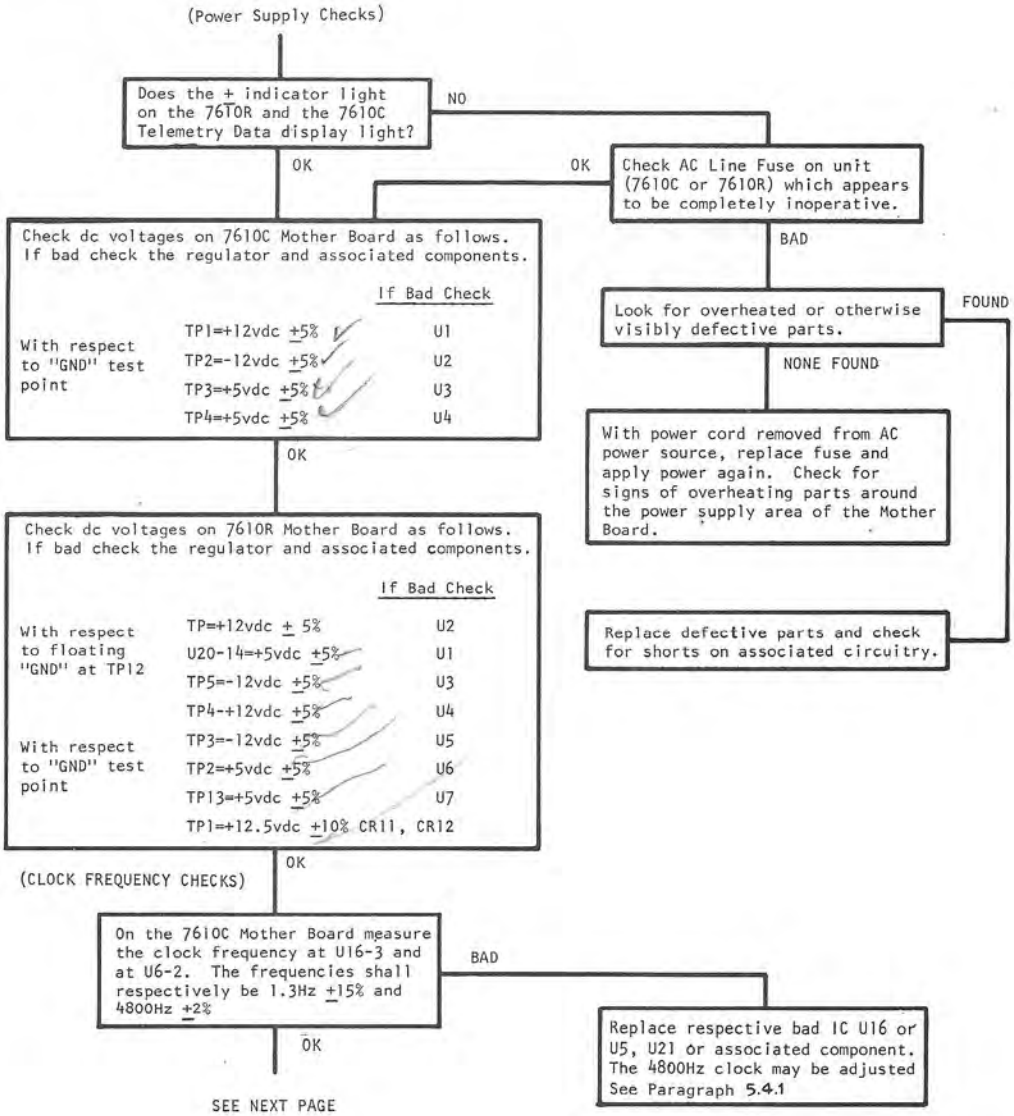

SEE NEXT PAGE

www.SteamPoweredRadio.Com

5.7.2 CON'T

On the 7610R Mother Board measure the clock frequency at U42-5 and U13-3. The frequencies shall respectively be 4800Hz ±2% and 20,480Hz ±1%.

BAD → Replace respective bad IC U42 or U13 or associated component. These clock frequencies may be adjusted. See Paragraphs 5.4.1 and 5.4.2 respectively

OK

(OTHER TESTS)

With the 7610R in Local Mode, select channels 00-09 from the 7610R frontpanel. Relays K1-K10 on the relay board shall correspondingly be selected.

BAD → Check 7610R relay select circuitry on Mother Board, thumbwheel switch, and the 7610R relay board.

OK

The 7610C channel verification shall indicate the same channel as selected at the 7610R.

BAD → Does 7610C Tele Fail LED Light?

NO → Check channel data loaded in 7610R shift registers and serially loaded into 7610R UART U28. Reference Data Format Table 4-2. If OK, check data serially received at 7610C shift registers from 7610C UART U17. Data from 7610C shift registers is latched into latch-decoder IC's on 7610C display board.

YES → Check the following associated circuitry:

1. 7610R Mother Board UART U28.
2. 7610R Modem FSK Generator.
3. The output into the phone line if used shall be 0dbm.
4. If SCA generator is used, check output.
5. Down link: (Telco or SCA). Telco line loss shall not exceed 30db.
6. 7610C; if SCA demodulator is used, check FSK output.
7. Receive level at output of 7610C rear panel should be +1.5V, system may operate marginally.
8. Check serial logic data from 7610C FSK Modem detector board.
9. 7610C Mother Board UART U17.

No Problem Here → Check channel data loaded in 7610R shift registers and serially loaded into 7610R UART U28. Reference Data Format Table 4-2. If OK, check data serially received at 7610C shift registers from 7610C UART U17. Data from 7610C shift registers is latched into latch-decoder IC's on 7610C display board.

OK

With the 7610R in Local Mode, alternately depress the Up and Down pushbutton switches at 7610R. The corresponding 7610R indicator shall light and the Up and Down relay on 7610R Mother Board shall energize. The Up and Down relay contact closure should be verified with an ohmmeter across the corresponding A-B terminals of the Quick Disconnect terminal strip at the rear of 7610R at the terminals corresponding to the channel selected (check Failing channel).

BAD → Check 7610R circuitry associated with the Up-Down pushbutton switches and the Up-Down relays K1 and K2 on the 7610R Mother Board. If OK, Check the appropriate relay on the 7610R Relay Board.

OK

Select desired channel, 00-09 at the 7610R, with no wires or voltage connected, for that channel, to Tele +, - 7610R rear barrier terminal strip, the 7610R telemetry Data shall display "±0000" (±0002).

BAD → Check circuitry associated with the 7610R A-D converter (LD110/LD111)

OK

Connected a verifiable accurate dc voltage to the same 7610R rear Tele +- terminals as above. Applied voltage shall be less than 3vdc. With the corresponding 7610R front panel scaling pot set Full CW, the 7610R telemetry Data shall display a value equal to that applied to within ±3 counts. (ie. 3mv)

BAD → Check the circuitry associated with the 7610R A-D converter (LD 110/LD 111). Verify that the applied dc voltage is getting thru the 7610R relay board. Further check that digital data is getting multiplexed from the LD110 to the 7610R tri-state holding register consisting of U15, U17, U18. Is this data getting to the 7610R display board.

OK

SEE NEXT PAGE

www.SteamPoweredRadio.Com

5.7.2 CON'T

The 7610C Telemetry Data shall indicate the same reading as displayed at the 7610R.

BAD → Check the serially loaded data into the 7610R UART U28. If OK check data serially received at 7610C shift registers from 7610 UART U17. Data from 7610C shift registers is latched into latch-decorder IC's on 7610C display board.

OK → De-select Local Mode at the 7610R. The 7610R Telemetry display shall be blank except for the "±".

OK → BAD → Check associated Local Control Switch and Local Control Signal to the 7610R display board.

The 7610C EXTERNAL CONTROL should be turned OFF. From the 7610C frontpanel select channel 00-09. Relays K1-K10 on the 7610R relay board shall correspondingly be selected. It is sufficient to verify this selection by monitoring the indication of the 7610C channel verification display.

BAD → Is the 7610R Control Failsafe relay de-energized indicating an Up-Link control failure? (With an ohmmeter check for lack of continuity across the rear 7610R Failsafe barrier strip terminals.)

(YES) BAD → Check channel select data and site select data loaded into 7610C shift registers and serially loaded into 7610C UART U17. Reference Data Format Table 4-1. If OK, check data serially received at 7610R shift registers from 7610R UART U28. Received channel data RX1 and RX2 is compared at the output of the shift registers by a digital comparator. If all corresponding data bit functions compare and the site select also compare then the channel data will be gated into registers U38, U39.

NO (OK) → Check the following associated circuitry:

1. 7610C Mother Board UART U17.
2. 7610C Modem FSK generator.
3. The output into the phone line if used shall be 0 dbm.
4. If SCA generator is used, check output.
5. Up control link: (Telco or SCA). Telco line loss shall not exceed 30 db.
6. 7610R; if SCA demodulator is used check FSK output.
7. Receive level at output of 7610R rear panel should be +1.5V, system may operate marginally.
8. Check serial logic from 7610R FSK Modem detector board.
9. 7610R Mother Board UART U28.

No Problem Here → Check channel select data and site select data loaded into 7610C shift registers and serially loaded into 7610C UART U17. Reference Data Format Table 4-1. If OK, check data serially received at 7610R shift registers from 7610R UART U28. Received channel data RX1 and RX2 is compared at the output of the shift registers by a digital comparator. If all corresponding data bit functions compare and the site select also compare then the channel data will be gated into registers U38, U39.

OK → Alternately depress the UP and DOWN pushbutton switches at 7610C. The corresponding UP and DOWN indicators shall light at the 7610R.

YES (OK) → Depress both the UP and DOWN pushbuttons simulataneously at the 7610C. Neither UP or DOWN indicator shall light at the 7610R.

NO (BAD) → Check to see that appropriate UP or DOWN control signals appear at input of U11 shift register on 7610C Mother Board. If OK, check output of shift register U33 on 7610R Mother Board. at the time of the latch pulse. If both UP and DOWN controls are not simultaneously present the correct control will be latched into U39 and thereby select the proper UP or DOWN relay.

OK → Depress both the UP and DOWN pushbuttons simulataneously at the 7610C. Neither UP or DOWN indicator shall light at the 7610R.

BAD → Replace U36 or U64 on 7610R Mother Board.

With no connection to the 7610C rear External Control Connector or to J11 on the 7610 Mother Board, set the 7610C EXTERNAL CONTROL switch to ON. The 7610C channel verification shall read channel 00. The 7610C UP and DOWN indicators shall remain extinguished.

BAD → On 7610C Mother Board check U7, U8, U9 and associated input circuitry.

OK

SEE NEXT PAGE

www.SteamPoweredRadio.Com

5.7.2 CONT

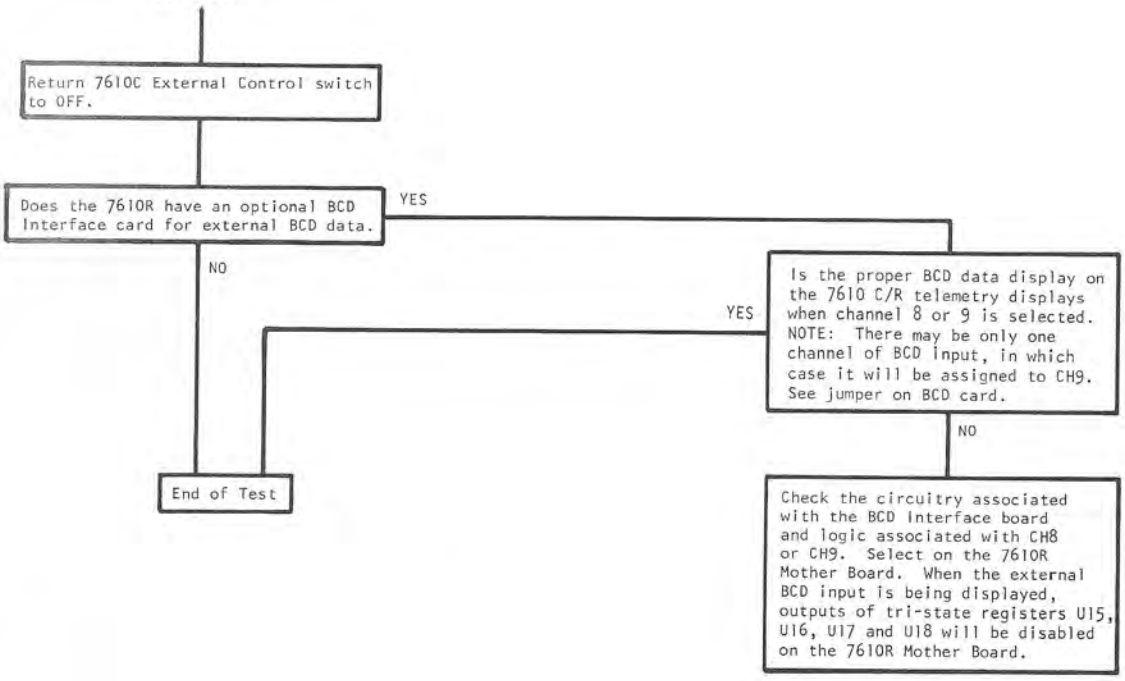

5.7.3 7615 R (s) and/or 7615C (s) Fail to Function Properly with the 7610 C/R.

Assuming that the 7615R (S) has no external wires connected to the rear terminals; connect with jumper wires the 15 rear Control outputs to the corresponding 15 Status input as follows:

a) Connect the top Control output terminals 1 thru 15 respectively to the top Status input terminals 1 thru 15.

b) Connect the bottom Control output terminals 1 thru 15 respectively to the bottom Status input terminals 1 thru 15.

Before starting tests verify that switch S1 internal to the 7615C and 7615R are in corresponding positions for each 7615 pair (for 15 channels).

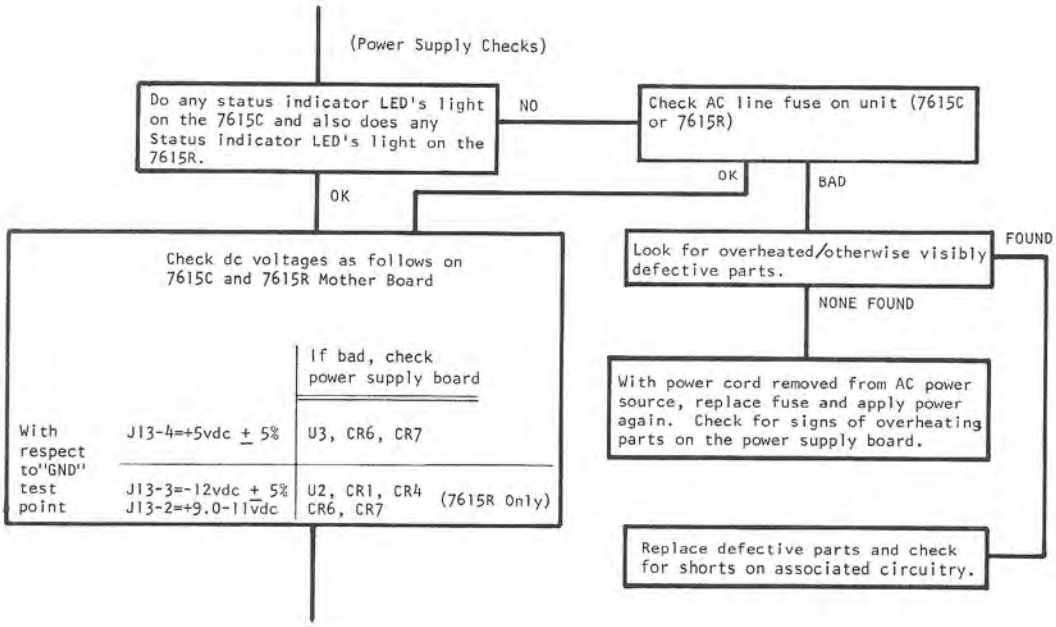

www.SteamPoweredRadio.Com

With the 7615R in Local Control Mode turn-on (UP) Direct Control switches at the 7615R one at a time. As each switch is selected a corresponding relay (K1-K15) shall be energized. As each switch is de-selected a corresponding relay shall be de-energized.

BAD → Verify that Q1-Q15 are being disabled by -0.7V ± 0.2V at J12-5 on 7615R Mother Board. If OK check circuitry associated with failing frontpanel Direct Control switch and control relay (K1-K15).

OK ↓

Verify continuity with an ohmmeter across 7615R rearpanel Local WARN terminals.

BAD → Check 7615R frontpanel Local Control switch.

OK ↓

As each 7615R Direct Control switch is selected or deselected, a corresponding 7615R status indicator shall be illuminated or extinquished respectively.

BAD → Verify control relay contact closure (or opening) at the rear 7615R panel. Check U15, U16, U17 and associated components on 7615R Mother Board. If OK, Check frontpanel display board and wiring there-to.

OK ↓

As each 7615R Direct Control switch is selected or deselected, a corresponding 7615C status indicator shall be illuminated or extinquished respectively.

BAD → Check the data serially shifted from shift registers U18, U19 on the 7615R Mother Board to U28 UART on the 7610R Mother Board. Clocking signals for 7615R are derived from 7610R. If OK, check serial data into shift registers U5, U3, U6 and U9 on 7615C Mother Board. This data is received from 7610C UART U17. Clocking signals for 7615C are derived from 7610C. Status data received by 7615C shift registers is loaded into parallel holding registers if two complete transfers compare. Check Q-output of 7615C U12, U13, and U14. If OK, check failing transistor (Q1-Q15), frontpanel LED or associated component.

OK ↓

With the 7615R in REMOTE CONTROL mode, turn-on (UP) Direct Control switches at the 7615C one at a time. As each switch is selected a corresponding STATUS LED shall light at the 7615R and 7615C. As each 7615C switch is de-selected a corresponding STATUS LED shall be extinquished at the 7615R and 7615C.

BAD → Check the data serially shifted from shift registers U18 and U19 on the 7615C Mother Board to U17 UART on the 7610C Mother Board. Clocking signals for the 7615C are derived from 7610C. If OK, check serial data into shift registers U5, U3, U6 and U9 on the 7615R Mother Board. This data is received from 7610R UART U28. Clocking signals for 7615R are derived from 7610R. Control data received by 7615R shift registers is loaded into parallel holding registers if two complete transfers compare. Check Q outputs of 7615R U12, U13, and U14. If OK, check failing transistor Q1-Q15, frontpanel LED or associated component.

OK ↓

Test complete. Optional tests can be performed on the 7615C to verify that the rearpanel status outputs are proper and that control can be accomplished via the 7615C rearpanel Control inputs. Remove jumper wires on the rearpanel of 7615R.

www.SteamPoweredRadio.Com

5.7.4 7630 unit (s) Fails to Function Properly with 7610R.

On the 7630 Relay Select Logic board, verify that DIP switches S2 and S1 are set properly for the 7630 assigned channels. Only one position on each switch shall be ON. The position that is ON assigns 10 channels corresponding to the most significant digit of the channel select thumbwheel on the 7610 C/R.

OK

Measure the dc voltages on the 7630 Relay Select Logic Board.

		If bad check
With respect to "GND" testpoint	U8-16=+5vdc ± 5%	U7
	C2=+12vdc ± 10%	--

NOTE: The +12.5vdc and +9vdc from which +5vdc is derived comes over a cable from the 7610R.

OK

With the 7610R in Local Mode, Select channel X0-X9 from the 7610R (X=channels assigned to left side of 7630). Relays K1-K10 of the 7630 left relay board shall be correspondingly by energized.

BAD → Check relay select Logic in 7630 associated with realy board #1 (Left). If OK, check realy Select Logic on the 7610R Mother Board. Check the cable between the 7630 and 7610R (or another 7630).

OK

Select channel X0-X9 from the 7610R (X=channels assigned to right side of 7630). Relays K1-K10 of the 7630 right relay board shall be correspondingly be energized.

BAD → Check realy select logic in 7630 associated with realy board#2 (right). If OK, check relay select logic on the 7610R Mother Board. Check the cable between the 7630 and 7610R (or another 7630).

OK

Alternately depress the UP and DOWN pushbutton switches at the 7610R. The UP and DOWN relay contact closure should be verified with an ohmmeter across the corresponding A-B terminals of the Quick Disconnect terminal strip at the rear of the 7630 at the terminals corresponding to the channel selected (check Failing channel).

BAD → Check the 7630 relay corresponding to the channel selected. If OK, check cabling back to 7610R UP/DOWN relays.

OK

From the 7610R select desired channel corresponding to 7630 benig checked. With no wires or voltage connected, for that channel, to Tele +, - 7630 rear barrier terminal strip, the Telemetry Data shall display "± 0000" (± 0002).

BAD → Check for possible shorts of Tele + and - lines going back to 7610R.

OK

Connect a verifiable accurate dc voltage to the same 7630 rear Tele + - terminals as above. Applied voltage shall be less than 3 vdc. With the corresponding 7630 front panel scaling pot set Full CW, the 7610R Telemetry Data shall display a value equal to that applied to within ±3 count (i.e. 3mr).

BAD → Check the 7630 relay corresponding to the channel selected. If OK, verify that the Tele +,- dc voltage is getting back to the 7610R.

OK

End of Test

www.SteamPoweredRadio.Com

NEXT ASSY	USED ON
5004-7610	7610

REVISIONS

SYM	DESCRIPTION	DR	CHK	AUTH	DATE
A	REL TO PROD			SSG	3-4-77
B	REVISED PER ECO		MC	SGG	4-26-77

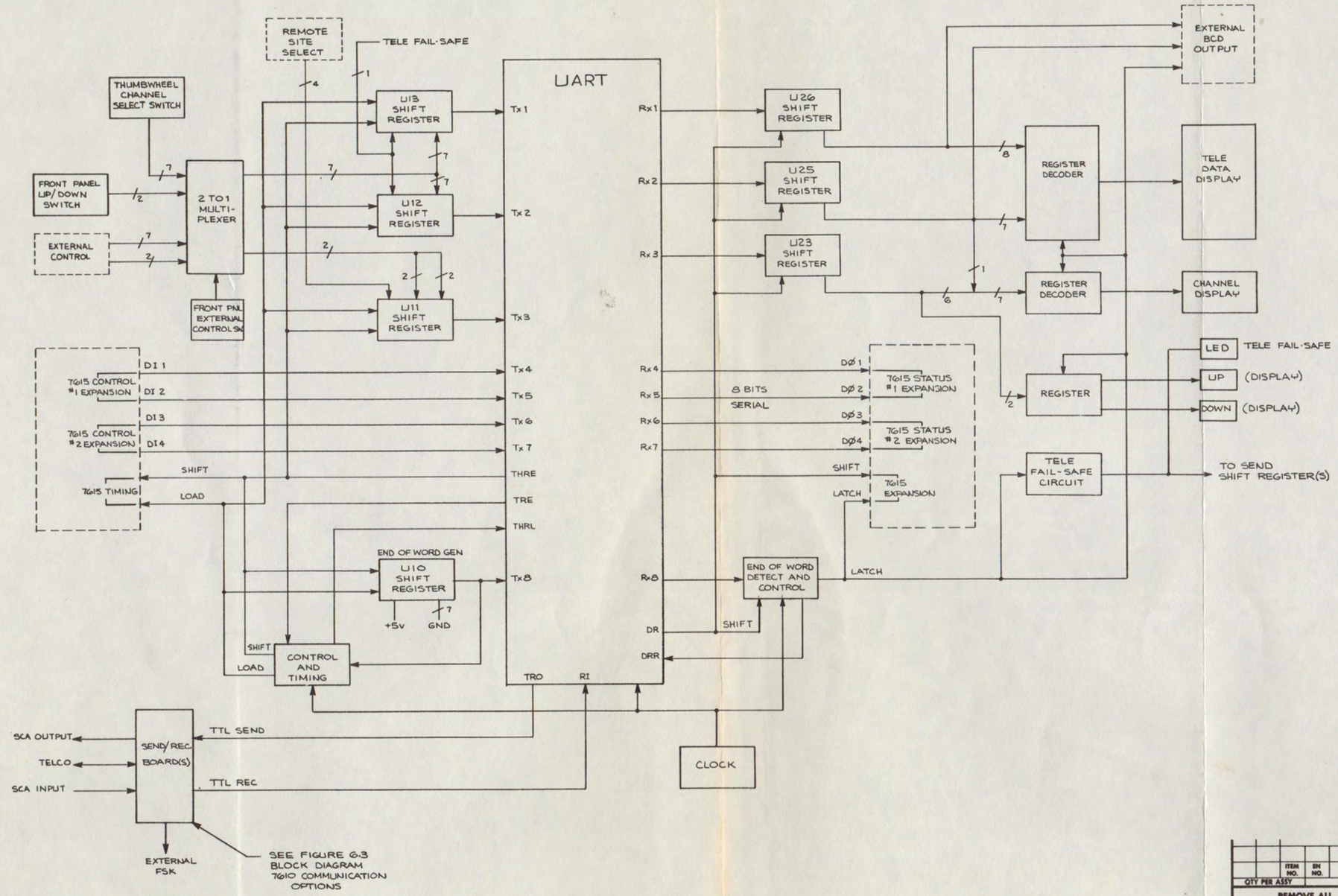

FIGURE 6.1.1

ITEM NO.	EN NO.	PART NO.	DESCRIPTION	REF. DES.
QTY PER ASSY			LIST OF MATERIALS	

REMOVE ALL BURRS AND SHARP EDGES

TOLERANCES UNLESS OTHERWISE SPECIFIED .XX ± .XXX ± ANGULAR ±

DO NOT SCALE THIS PRINT

DRAWN BY	Du Bay	DATE 3-8-77
CHK. BY		4/7/77
PROJ. ENG.		4-22-77
MFG. ENG.		
APPD.		4/19/77
APPD.		
ECO NO.		

TIME & FREQUENCY TECHNOLOGY INC.
3000 Olcott St., Santa Clara, California 95050
(408) 248-5005

TITLE BLOCK DIAGRAM MODEL 7610C

SIZE D DRAWING NO. 6600-1220 REV. B

SCALE ~ SHT 1 OF 1

If You Didn't Get This From My Site,
Then It Was Stolen From...
www.SteamPoweredRadio.Com

NEXT ASSY	USED ON	REVISIONS					
	7610C	SYM	DESCRIPTION	DR	CHK	AUTH	DATE
		B	REVISED PER ECO	TD	ARC	366	4-26-77

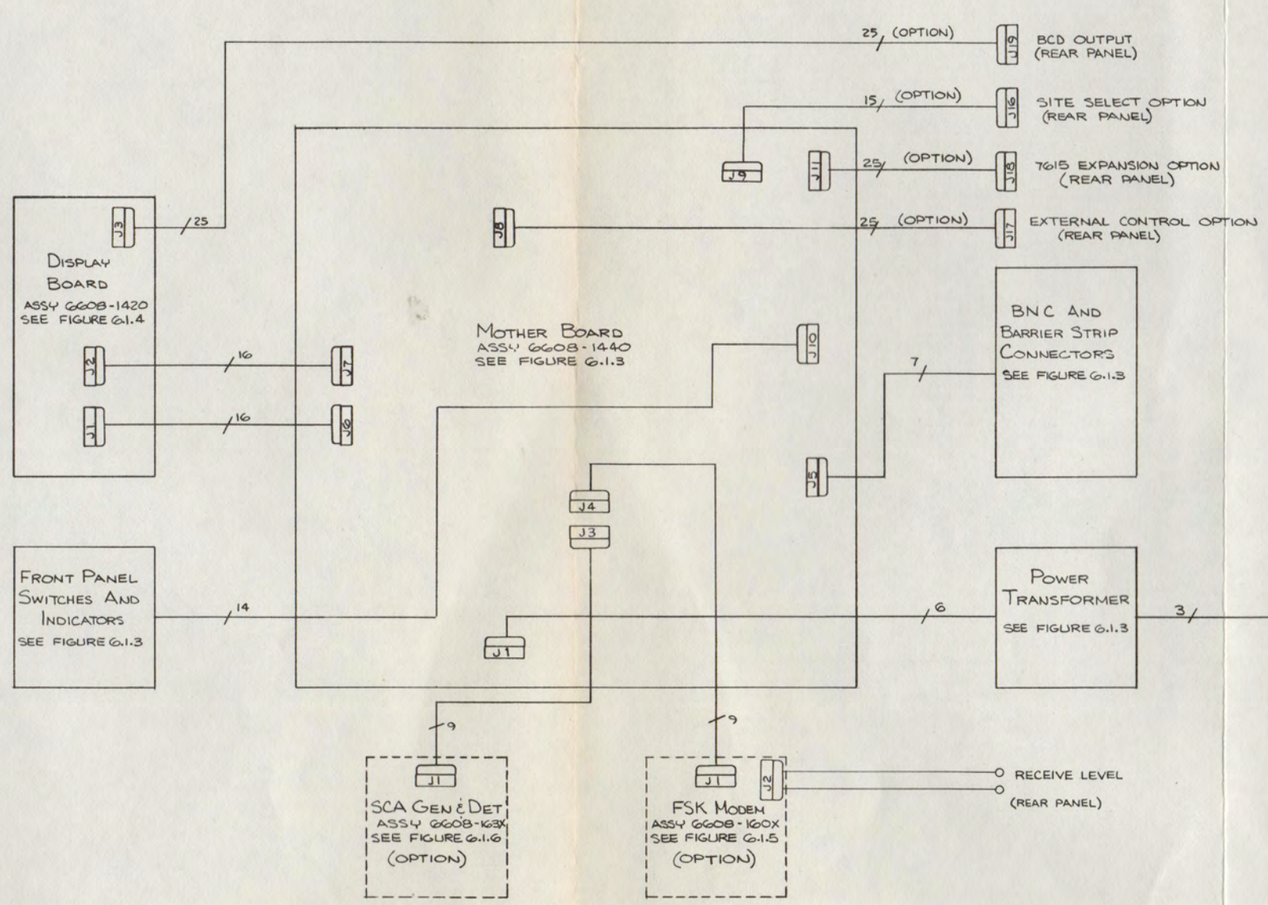

FIGURE 6.1.2

QTY PER ASSY	ITEM NO.	EN NO.	PART NO.	DESCRIPTION	REF. DES.

LIST OF MATERIALS

REMOVE ALL BURRS AND SHARP EDGES

TOLERANCES UNLESS OTHERWISE SPECIFIED
.XX ± ~ ANGULAR
.XXX ± ±

DO NOT SCALE THIS PRINT

		DATE
DRAWN BY	Sue Bay	3-9-77
CHK. BY	Hau	4/7/77
PROJ. ENG.	K. Engle	4-27-77
MFG. ENG.		
APPD.	CWE	4/8/77
APPD.		
ECO NO.		

TFT TIME & FREQUENCY TECHNOLOGY INC.
3000 Olcott St., Santa Clara, California 95050
(408) 246-6365

TITLE: WIRE DIAGRAM MODEL 7610C

SIZE D | DRAWING NO. 6600-1250 | REV. B

SCALE ~ | SHT. 1 OF 1

DWG. NO.

If You Didn't Get This From My Site,
Then It Was Stolen From...
www.SteamPoweredRadio.Com

Model 7610-C Mother BD Assembly # 6608-1440

Ckt. Ref.	Description	TFT Stock No.
C1	Cap Cer Disc 500pF 5%	1005-0501
C2	Cap Cer Disc 500pF 5%	1005-0501
C3	Cap Cer Disc 500pF 5%	1005-0501
C4	Cap Cer Disc 500pF 5%	1005-0501
C5	Cap Cer Disc 500pF 5%	1005-0501
C6	Cap Cer Disc 500pF 5%	1005-0501
C7	Cap Cer Disc 500pF 5%	1005-0501
C8	Cap Cer Disc 500pF 5%	1005-0501
C9	Cap Cer Disc 500pF 5%	1005-0501
C10	Cap Poly Carb .047MFD 50V	1006-0470
C11	Cap ELect 500MFD 25V	1010-0511
C12	Cap Tan 10MFD 20V 10%	1008-0101
C13	Cap Elect 500MFD 25V	1010-0511
C14	Cap Tan 10MFD 20V 10%	1008-0101
C15	Cap Elect 8000UF 25V	1010-8000
C16	Cap Tan 10MFD 20V 10%	1008-0101
C17	Cap Tan 10MFD 20V 10%	1008-0101
C18	Cap Cer Disc .01MFD	1005-1039
C19	Cap Cer Disc .01MFD	1005-1039
C20	Cap Cer Disc .01MFD	1005-1039
C21	Cap Cer Disc .01MFD	1005-1039
C22	Cap Mylar 1MFD 200V 5%	1004-0002
C23	Cap Cer Disc .01MFD	1005-1039
C24	Cap Cer Disc .01MFD	1005-1039
C25	Cap Cer Disc .01MFD	1005-1039
C26	Cap Cer Disc .01MFD	1005-1039
C27	Cap Tan 10MFD 20V 10%	1008-0101
C29	Cap Cer Disc 500pF 5%	1005-0501
C30	Cap Cer Disc 500pF 5%	1005-0501
C31	Cap Cer Disc 500pF 5%	1005-0501
C32	Cap Cer Disc .1UF 12V	1005-0100
C33	Cap Cer Disc .1UF 12V	1005-0100
C34	Cap Cer Disc .1UF 12V	1005-0100
C35	Cap Cer Disc .1UF 12V	1005-0100
C36	Cap Cer Disc .1UF 12V	1005-0100
C37	Cap Cer Disc .1UF 12V	1005-0100
C38	Cap Cer Disc .1UF 12V	1005-0100
C39	Cap Cer Disc .05MFD	1005-5039
CR1	Dio Rect 1N4001	1284-4002
CR2	Dio Rect 1N4001	1284-4002
CR3	Dio Rect 1N4001	1284-4002
CR4	Dio Rect 1N4001	1284-4002

Model 7610-C Mother BD Assembly # 6608-1440

Ckt. Ref.	Description	TFT Stock No.
CR5	Dio MR501	1281-0501
CR6	Dio MR501	1281-0501
J1	Plug 6 Pin	2250-6006
J2	Conn 12 Pin Molex	2250-6012
J3	Conn 12 Pin Molex	2250-6012
J4	Conn 12 Pin Molex	2250-6012
J5	Plug 7 Pin Molex	2250-6007
J6	Socket, I/C 16 Pin	2250-1016
J7	Socket, I/C 16 Pin	2250-1016
J8	Conn 26 Pin M Header	2250-6512
J9	Socket, I/C 16 Pin	2250-1016
J10A	Plug 7 Pin Molex	2250-6007
J10B	Plug 7 Pin Molex	2250-6007
J11	Conn 26 Pin M Header	2250-6512
Q1	Xistor 2N5089	1271-5089
Q2	Xistor 2N5089	1271-5089
R1	Res MT FLM 1/8W 1% 3.32K	1061-3301
R2	Pot PC MT 5000HM 1T	1072-0500
R3	Res Car Comp 1/4W 5% 1.2K	1065-1201
R4	Res Car Comp 1/4W 5% 1.2K	1065-1201
R5	Res Car Comp 1/4W 5% 1.2K	1065-1201
R6	Res Car Comp 1/4W 5% 1.2K	1065-1201
R7	Res Car Comp 1/4W 5% 1.2K	1065-1201
R8	Res Car Comp 1/4W 5% 1.2K	1065-1201
R9	Res Car Comp 1/4W 5% 1.2K	1065-1201
R10	Res Car Comp 1/4W 5% 1.2K	1065-1201
R11	Res Car Comp 1/4W 5% 1.2K	1065-1201
R12	Res Car Comp 1/4W 5% 4.7K	1065-4701
R13	Res Car Comp 1/4W 5% 4.7K	1065-4701
R14	Res Car Comp 1/4W 5% 4.7K	1065-4701
R15	Res Car Comp 1/4W 5% 4.7K	1065-4701
R16	Res Car Comp 1/4W 5% 4.7K	1065-4701
R17	Res Car Comp 1/4W 5% 4.7K	1065-4701
R18	Res Car Comp 1/4W 5% 4.7K	1065-4701
R19	Res Car Comp 1/4W 5% 4.7K	1065-4701
R20	Res Car Comp 1/4W 5% 4.7K	1065-4701
R21	Res Car Comp 1/4W 5% 4.7K	1065-4701
R22	Res Car Comp 1/4W 5% 150	1065-0150
R23	Res Car Comp 1/4W 5% 1.2K	1065-1201
R24	Res Car Comp 1/4W 5% 1.2K	1065-1201
R25	Res Car Comp 1/4W 5% 1.2K	1065-1201
R26	Res Car Comp 1/4W 5% 1.2K	1065-1201

Model 7610-C Mother BD Assembly # 6608-1440

Ckt. Ref.	Description	TFT Stock No.
R27	Res Car Comp 1/4W 5% 4.7K	1065-4701
R28	Res Car Comp 1/4W 5% 1K	1065-1001
R29	Pot 10K 1T	1072-1002
R30	Res MT FLM 1/8W 1% 1.1 MEG	1061-1104
R31	Res MT FLM 1/8W 1% 4.99K	1061-4991
R32	Res Car Comp 1/4W 5% 1.2K	1065-1201
R33	Res Car Comp 1/4W 5% 1.2K	1065-1201
R34	Res Car Comp 1/4W 5% 1.2K	1065-1201
R35	Res Car Comp 1/4W 5% 1.2K	1065-1201
R36	Res Car Comp 1/4W 5% 2.2K	1065-2201
R37	Res Car Comp 1/4W 5% 22K	1065-2202
R39	Res Car Comp 1/4W 5% 470	1065-0470
R40	Res Car Comp 1/4W 5% 33K	1065-3302
R41	Res Car Comp 1/4W 5% 4.7K	1065-4701
R42	Res Car Comp 1/4W 5% 560	1065-0560
R44	Res Car Comp 1/4W 5% 4.7K	1065-4701
S1	Switch, 16 Pin Dip	1800-2068
U1	I/C Reg 1/2 Amp +12V	1100-4212
U2	I/C Reg 1/2 Amp 12V	1100-2012
U3	I/C LM340T-05	1100-7805
U4	I/C LM340T-05	1100-7805
U5	I/C LM567CN	1100-0567
U6	I/C MM74C161N	1102-0161
U7	I/C MM74C157N	1102-0157
U8	I/C MM74C157N	1102-0157
U9	I/C MM74C157N	1102-0157
U10	I/C MM74C165	1102-0165
U11	I/C MM74C165	1102-0165
U12	I/C MM74C165	1102-0165
U13	I/C MM74C165	1102-0165
U14	I/C LM741CN	1100-0741
U15	I/C MM74C74N	1102-7474
U16	I/C LM555CN	1100-0555
U17	I/C MM5303	1100-5303
U18	I/C MM74C08N	1102-7408
U19	I/C MM74C08N	1102-7408
U20	I/C MM75452N	1100-5452
U21	I/C MM74C04	1102-7404
U22	I/C MM74LS74N	1101-7474
U23	I/C MM74LS164N	1101-0164
U24	I/C MM74C08N	1102-7408
U25	I/C MM74LS164N	1101-0164

Model 7610-C Mother Board Assembly # 6608-1440

Ckt. Ref.	Description	TFT Stock No.
U26	I/C MM74LS164N	1101-0164
U27	I/C MM7400N	1102-7400
U28	I/C SN74LS04N	1101-7404
U29	I/C MM74C08N	1102-7408
U30	I/C SN74LS04N	1101-7404
U31	I/C SN74LS04N	1101-7404
U32	I/C MM74C04	1102-7404
U33	I/C MM74C04	1102-7404
	PC BD 7610-C Mother	1600-1440
	Heatsink 6071B	2010-6071
	Heatsink 6072B	2010-6072
	Tyton, QWK Tie	2140-0004
	Tyton, QWK Tie	2140-0004
	Tie Mounts TC141	2140-0141
	Tie Mounts TC141	2140-0141
	Socket, I/C 8 Pin	2250-1008
	Socket, I/C 14 Pin	2250-1014
	Socket, I/C 16 Pin	2250-1016
	Socket, I/C 40 Pin	2250-1040
	Socket, I/C 40 Pin	2250-1040

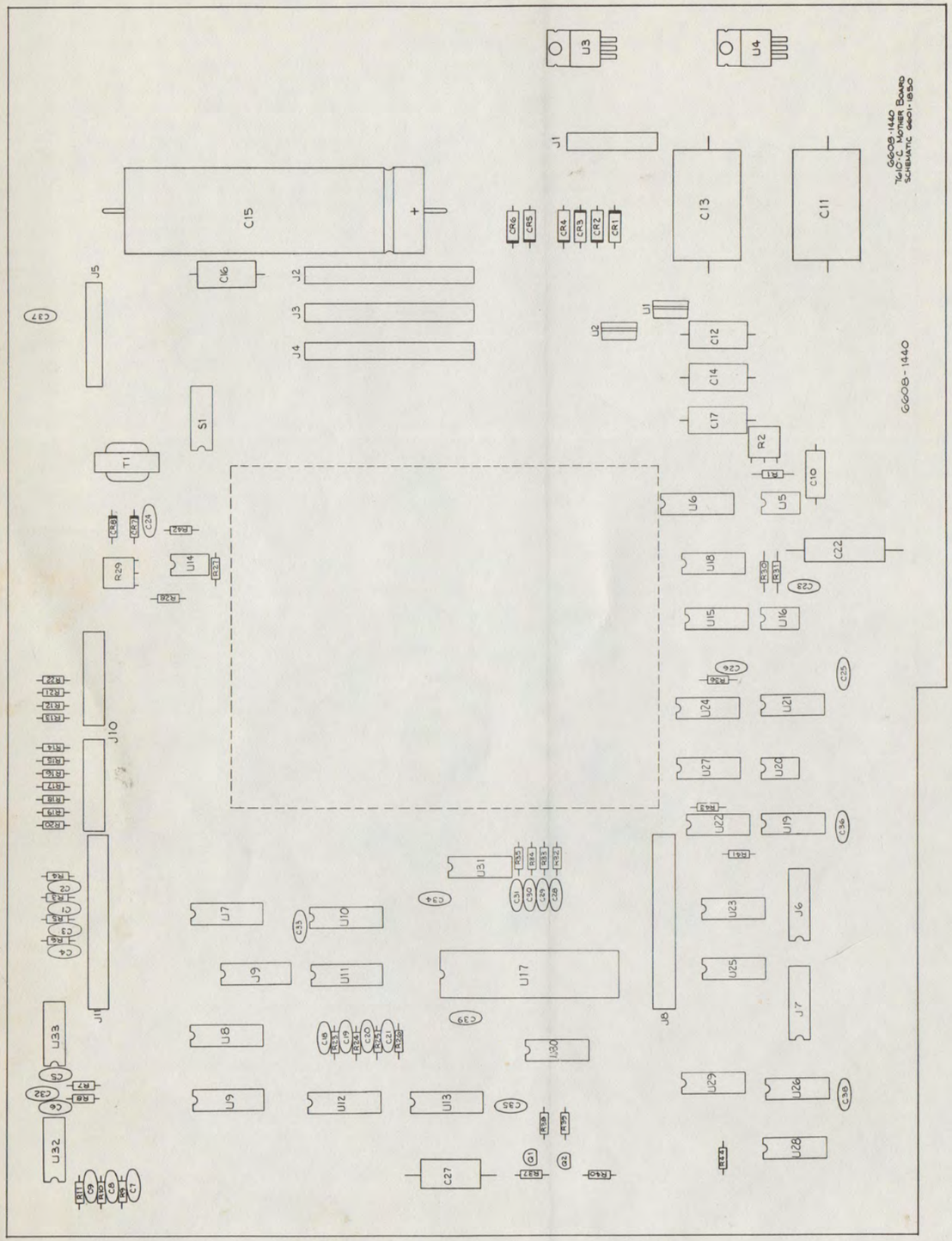

www.SteamPoweredRadio.Com

NEXT ASSY	USED ON
5004-7610	7610-C

REVISIONS

SYM	DESCRIPTION	DR	CHK	AUTH	DATE
B	REVISED PER ECO	TD	RC	JGC	4-27-77

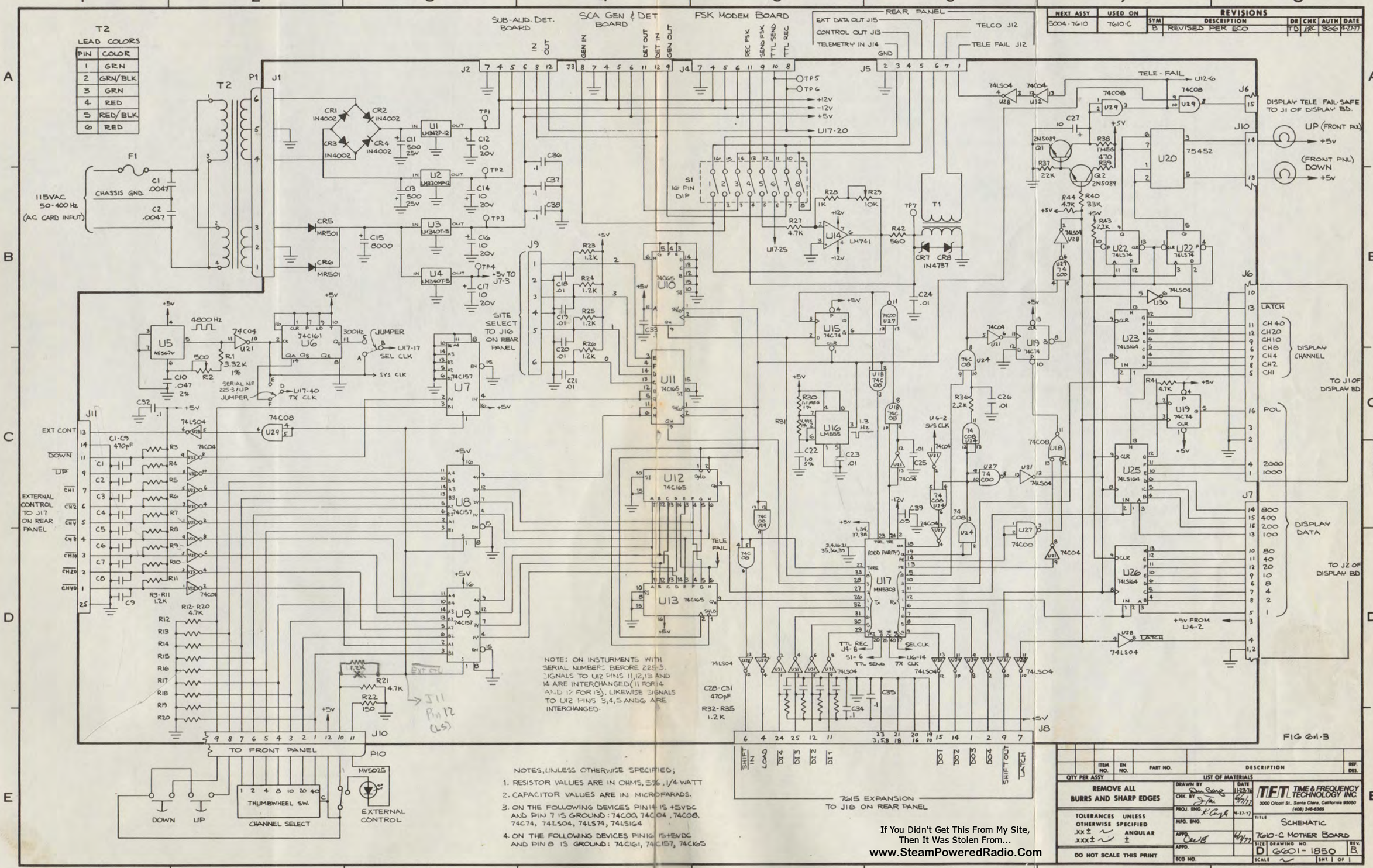

NOTE: ON INSTURMENTS WITH SERIAL NUMBERS BEFORE 225-3, SIGNALS TO U12 PINS 11,12,13 AND 14 ARE INTERCHANGED (11 FOR 14 AND 12 FOR 13). LIKEWISE SIGNALS TO U12 PINS 3,4,5 AND 6 ARE INTERCHANGED.

NOTES, UNLESS OTHERWISE SPECIFIED;

1. RESISTOR VALUES ARE IN OHMS, 5%, 1/4 WATT
2. CAPACITOR VALUES ARE IN MICROFARADS.
3. ON THE FOLLOWING DEVICES PIN 14 IS +5VDC AND PIN 7 IS GROUND: 74C00, 74C04, 74C08, 74C74, 74LS04, 74LS74, 74LS164
4. ON THE FOLLOWING DEVICES PIN 16 IS +5VDC AND PIN 8 IS GROUND: 74C161, 74C157, 74C165

FIG 6-1-3

QTY PER ASSY	ITEM NO.	EN NO.	PART NO.	DESCRIPTION	REF. DES.

LIST OF MATERIALS

REMOVE ALL BURRS AND SHARP EDGES

TOLERANCES UNLESS OTHERWISE SPECIFIED .XX ± .XXX ± ANGULAR ±

DO NOT SCALE THIS PRINT

		DATE
DRAWN BY	Don Bang	12-23-76
CHK. BY	J. Tate	4/7/77
PROJ. ENG.	K. Cogle	4-27-77
MFG. ENG.		
APPD.	Don B	4/8/77
APPD.		
ECO NO.		

TFT TIME & FREQUENCY TECHNOLOGY INC.
3000 Olcott St., Santa Clara, California 95050
(408) 246-6365

TITLE: SCHEMATIC 7610-C MOTHER BOARD

SIZE D | DRAWING NO. 6601-1850 | REV. B

SCALE ~ | SHT 1 OF 1

DWG. NO.

If You Didn't Get This From My Site,
Then It Was Stolen From...
www.SteamPoweredRadio.Com

Display BD 7610-C Assembly # 6608-1420

Ckt. Ref.	Description	TFT Stock No.
CR1	Led MV5025	1285-5025
DS1	Led DL704 8	1285-0704
DS2	Led DL704 8	1285-0704
DS3	Led DL 701+1	1285-0701
DS4	Led DL704 8	1285-0704
DS5	Led DL704 8	1285-0704
DS6	Led DL704 8	1285-0704
DS7	Led DL704 8	1285-0704
J3	Conn 26 Pin M Header	2250-6512
Q1	Xistor 2N4275	1271-4275
Q2	Xistor 2N4275	1271-4275
R1	Res Car Comp 1/4W 5% 4.7K	1065-4701
R2	Res Car Comp 1/4W 5% 150	1065-0150
R3	Res Car Comp 1/4W 5% 4.7K	1065-4701
R4	Res Car Comp 1/4W 5% 120	1065-0120
R5	Res Car Comp 1/4W 5% 150	1065-0150
U1	I/C 9368PC	1100-9368
U2	I/C 9368PC	1100-9368
U3	I/C 9368PC	1100-0368
U4	I/C 9368PC	1100-9368
U5	I/C 9368PC	1100-9368
U6	I/C 9368PC	1100-9368
	Cap Cer Disc .1UF 12V	1005-0100
	Cap Tan 10MFD 20V 10%	1008-0100
	PC BD 7610-C Display	1600-1420
	Socket, I/C 14 Pin	2250-1014
	Socket, I/C 16 Pin	2250-1016

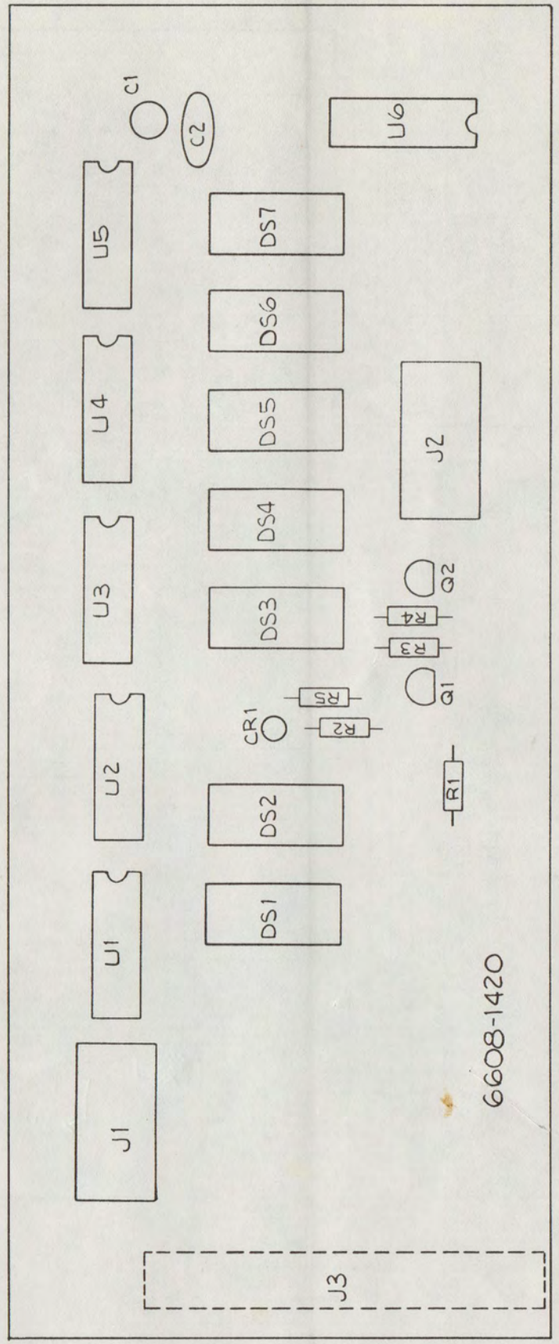

www.SteamPoweredRadio.Com

NEXT ASSY	USED ON	REVISIONS					
		SYM	DESCRIPTION	DR	CHK	AUTH	DATE
	7610-C	B	REVISED AND REDRAWN	TD	KC	366	4-25-77

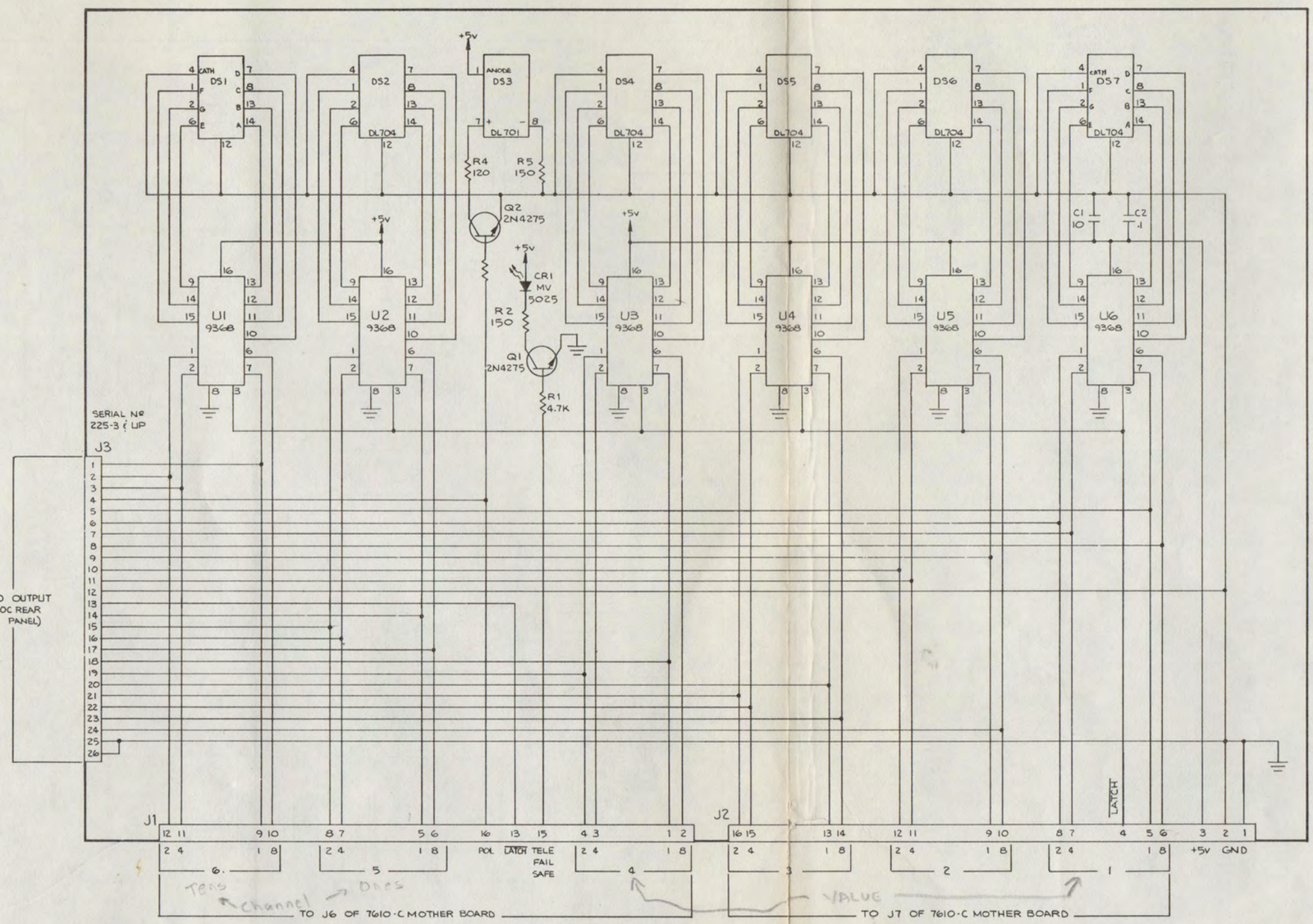

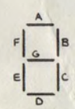

DL704 SEGMENTS

5 J3 (BCD OUTPUT) CONNECTOR APPLICABLE TO SERIAL NUMBER 225-3 AND UP
4 INDICATES FACTORY SELECT VALUES
3 INDUCTORS - VALUES ARE IN MICROHENRY ± 10%
2. CAPACITORS - VALUES ARE IN MICROFARADS
1. RESISTORS - VALUES ARE IN OHMS ± 5%, ¼ WATT
NOTES, UNLESS OTHERWISE SPECIFIED;

QTY PER ASSY	ITEM NO.	EN NO.	PART NO.	DESCRIPTION	REF. DES.

LIST OF MATERIALS

REMOVE ALL BURRS AND SHARP EDGES

TOLERANCES UNLESS OTHERWISE SPECIFIED
.XX ± ANGULAR
.XXX ± ±

DO NOT SCALE THIS PRINT

		DATE
DRAWN BY	Dan Bay	4-25-77
CHK. BY	[illegible]	6/17/77
PROJ. ENG.	K. Cugle	7-27-77
MFG. ENG.		
APPD.	DWE	6/17/77
APPD.		
ECO NO.		

TET TIME & FREQUENCY TECHNOLOGY INC.
3000 Olcott St., Santa Clara, California 95050
(408) 246-6365

TITLE FIGURE 6-1-4
SCHEMATIC : 7610-C
DISPLAY BOARD

SIZE D DRAWING NO. 6601-1860 REV. B
SCALE SHT 1 OF 1

DWG. NO.

If You Didn't Get This From My Site,
Then It Was Stolen From...
www.SteamPoweredRadio.Com

Model 7610-C FSK Modem BD Assembly # 6608-1602

Ckt. Ref.	Description	TFT Stock No.
C1	Cap Poly Carb 068MFD 50V	1006-0680
C2	Cap Poly Carb .11MFD 100V	1006-0110
C3	Cap Tan 10MFD 20V 10%	1008-0100
C4	Cap Poly Carb .1MFD 50V	1006-0101
C5	Cap Poly Carb .047MFD 50V	1006-0470
C6	Cap Poly Carb .03MFD 50V	1006-0300
C7	Cap Poly Carb .03MFD 50V	1006-0300
C8	Cap Poly Carb .03MFD 50V	1006-0300
C9	Cap Poly Carb .03MFD 50V	1006-0300
C10	Cap Tan 10MFD 20V 10%	1008-0100
C11	Cap Cer Disc .1UF 12V	1005-0100
C12	Cap Cer Disc .05MFD	1005-5039
C13	Cap Poly Carb .047MFD 50V	1008-0100
C14	Cap Cer Disc .1UF 12V	1005-0100
C15	Cap Poly .01MFD 100V	1002-0011
C16	Cap Cer Disc .01MFD	1005-1039
C39	Cap Poly Carb .03MFD 50V	1006-0300
C40	Cap Poly Carb .03MFD 50V	1006-0300
C41	Cap Poly Carb .03MFD 50V	1006-0300
C42	Cap Poly Carb .03MFD 50V	1006-0300
C47	Cap Cer Disc .1UF 12V	1005-0100
C48	Cap Cer Disc .05MFD	1005-5039
C49	Cap Cer Disc .05MFD	1005-5039
C50	Cap Cer Disc .05MFD	1005-5039
C51	Cap Cer Disc .05MFD	1005-5039
C52	Cap Tan 10MFD 20V 10%	1008-0100
C53	Cap Poly Carb 0047UF 2%	1006-0047
C54	Cap Poly Carb 0012 27	1006-0012
C55	Cap Poly Carb .1MFD 50V	1006-0101
C56	Cap Poly .022MFD 100V	1002-0221
C57	Cap Mica 750pF	1001-0751
C58	Cap Poly .1MFD 100V	1002-0010
C59	Cap Tan 10MFD 20V 10%	1008-0100
C60	Cap Tan 10MFD 20V 10%	1008-0100
CR1	Dio 1N3064	1281-3064
CR2	Dio 1N3064	1281-3064
CR3	Dio 1N3064	1281-3064
CR4	Dio 1N3064	1281-3064
CR5	Dio 1N281	1280-0281
Q1	Xistor 2N4275	1271-4275
R1	Res Car comp 1/4W 5% 4.7K	1065-4701
R2	Res MT FLM 1/8W 1% 18.2	1061-1822

Model 7610-C FSK Modem BD Assembly # 6608-1602

Ckt. Ref.	Description	TFT Stock No.
R3	Pot PC MT 1K 1T	1072-1001
R4	Res Car Comp 1/4W 5% 100K	1065-1003
R5	Res MT FLM 1/8W 1% 25.5K	1061-2552
R6	Res MT FLM 1/8W 1% 25.5K	1061-2552
R7	Res MT FLM 1/8W 1% 25.5	1061-2552
R13	Res Car Comp 1/4W 5% 22K	1065-2202
R14	Res MT FLM 1/8W 1% 499.	1061-0499
R15	Pot PC MT 500 OHM 1T	1072-0500
R16	Res Car Comp 1/4W 5% 910	1065-0910
R17	Res MT FLM 1/8W 1% 28.0K	1061-2802
R19	Res Car Comp 1/4W 5% 24K	1065-2402
R20	Res Car Comp 1/4W 5% 15K	1065-1502
R22	Pot PC MT 500 OHM 1T	1072-0500
R23	Res Car Comp 1/4W 5% 910	1065-0910
R24	Pot PC MT 500 OHM 1T	1072-0500
R25	Res Car Comp 1/4W 5% 24K	1065-2402
R26	Res Car Comp 1/4W 5% 15K	1065-1502
R27	Res MT FLM 1/8W 1% 825.	1061-0825
R28	Pot PC MT 500 OHM 1T	1072-0500
R29	Res Car Comp 1/4W 5% 910	1065-0910
R30	Pot PC MT 500 OHM 1T	1072-0500
R31	Res Car Comp 1/4W 5% 24K	1065-2402
R32	Res Car Comp 1/4W 5% 22K	1065-2202
R33	Res MT FLM 1/8W 1% 1K	1061-1001
R34	Pot PC MT 500 OHM 1T	1072-0500
R35	Res Car Comp 1/4W 5% 910	1065-0910
R37	Res MT FLM 1/8W 1% 43.2K	1061-4322
R38	Res MT FLM 1/8W 1% 27.4K	1061-2742
R39	Res MT FLM 1/8W 1% 32.4K	1061-3242
R40	Res Car Comp 1/4W 5% 24K	1065-2402
R41	Res Car Comp 1/4W 5% 1K	1065-1001
R42	Res Car Comp 1/4W 5% 22K	1065-2202
R43	Res MT FLM 1/8W 1% 34.8K	1061-3482
R46	Res Car Comp 1/4W 5% 3.3K	1065-3301
R47	Res Car Comp 1/4W 5% 5.1K	1065-5101
R48	Res Car Comp 1/4W 5% 470K	1065-4703
R49	Res Car Comp 1/4W 5% 100K	1065-1003
R50	Res MT FLM 1/8W 1% 71.5K	1061-7152
R51	Res MT FLM 1/8W 1% 19.6K	1061-1962
R53	Res Car Comp 1/4W 5% 560K	1065-5603
R54	Pot PC MT 5K 1T	1072-5001
R55	Res 1/8W 190MF 34.8K	1061-3482

Model 7610-C FSK Modem BD Assembly # 6608-1602

Ckt. Ref.	Description	TFT Stock No.
R56	Res MT FLM 1/8W 1% 34.8K	1061-3482
R57	Res MT FLM 1/8W 1% 34.8K	1061-3482
R58	Res MT FLM 1/8W 1% 34.8K	1061-3482
R59	Res Car Comp 1/4W 5% 1K	1065-1001
R60	Res Car Comp 1/4W 5% 100K	1065-1003
U1	I/C LM567CN	1100-0567
U2	I/C LM1458N	1101-1458
U3	I/C LM741CN	1100-0741
U4	I/C LM741CN	1100-0741
U5	I/C LM741CN	1100-0741
U6	I/C LM741CN	1100-0741
U7	I/C LM1458N	1101-1458
U8	I/C XR-2211CP	1100-2211
U9	I/C LM741CN	1100-0741
	Socket, I/C 8 Pin	2250-1008
	Socket, I/C 14 Pin	2250-1014
	Plug, 2 Pin RT/A Molex	2250-8802
	Plug, 12 Pin RT/A Molex	2250-8812
	PC BD 7610 Modem	1600-1600REVB

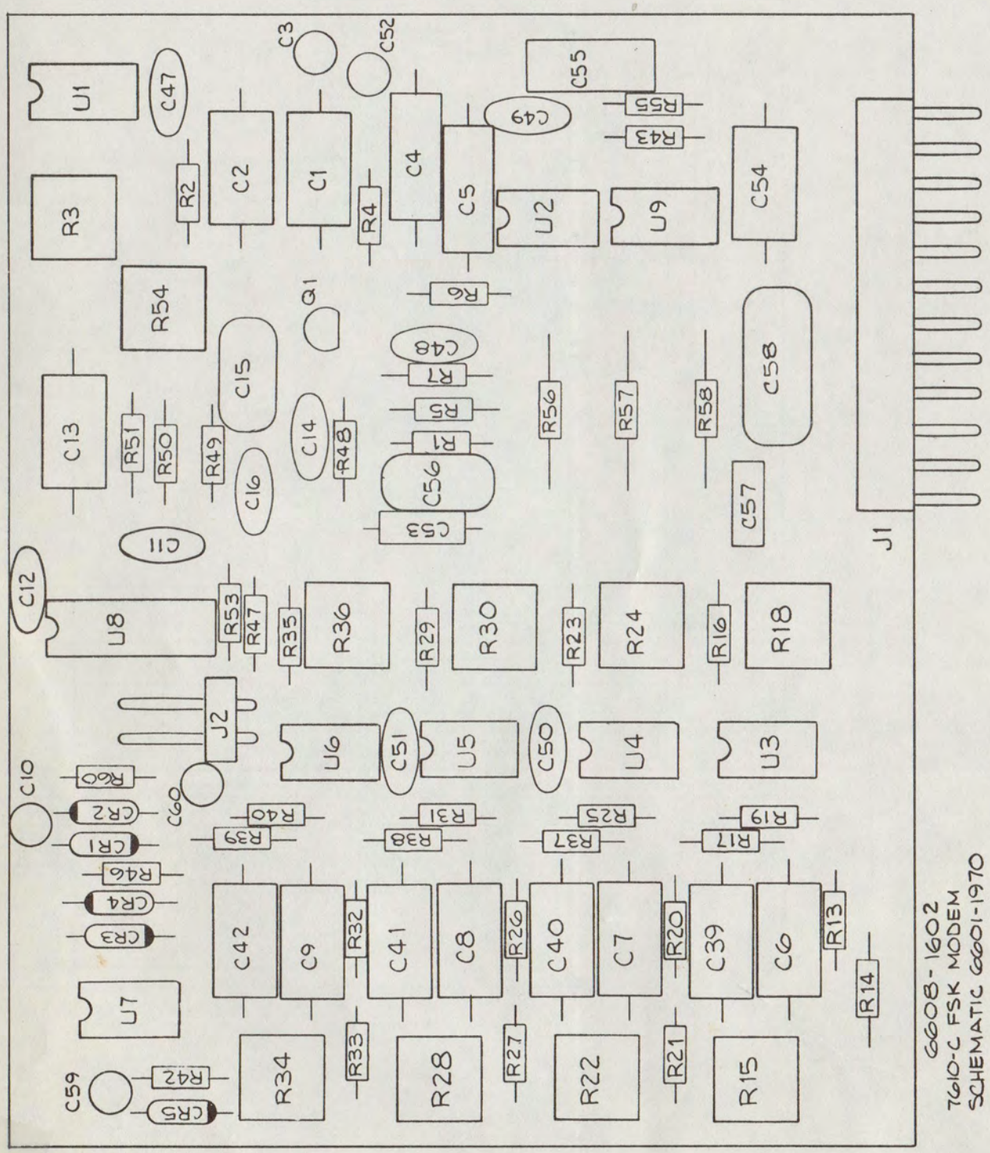

www.SteamPoweredRadio.Com

NEXT ASSY	USED ON
	7610C

REVISIONS

SYM	DESCRIPTION	DR	CHK	AUTH	DATE
A	REL TO PROD	TD			
B	REVISED PER ECO	TD	KRC	366	4-26-77

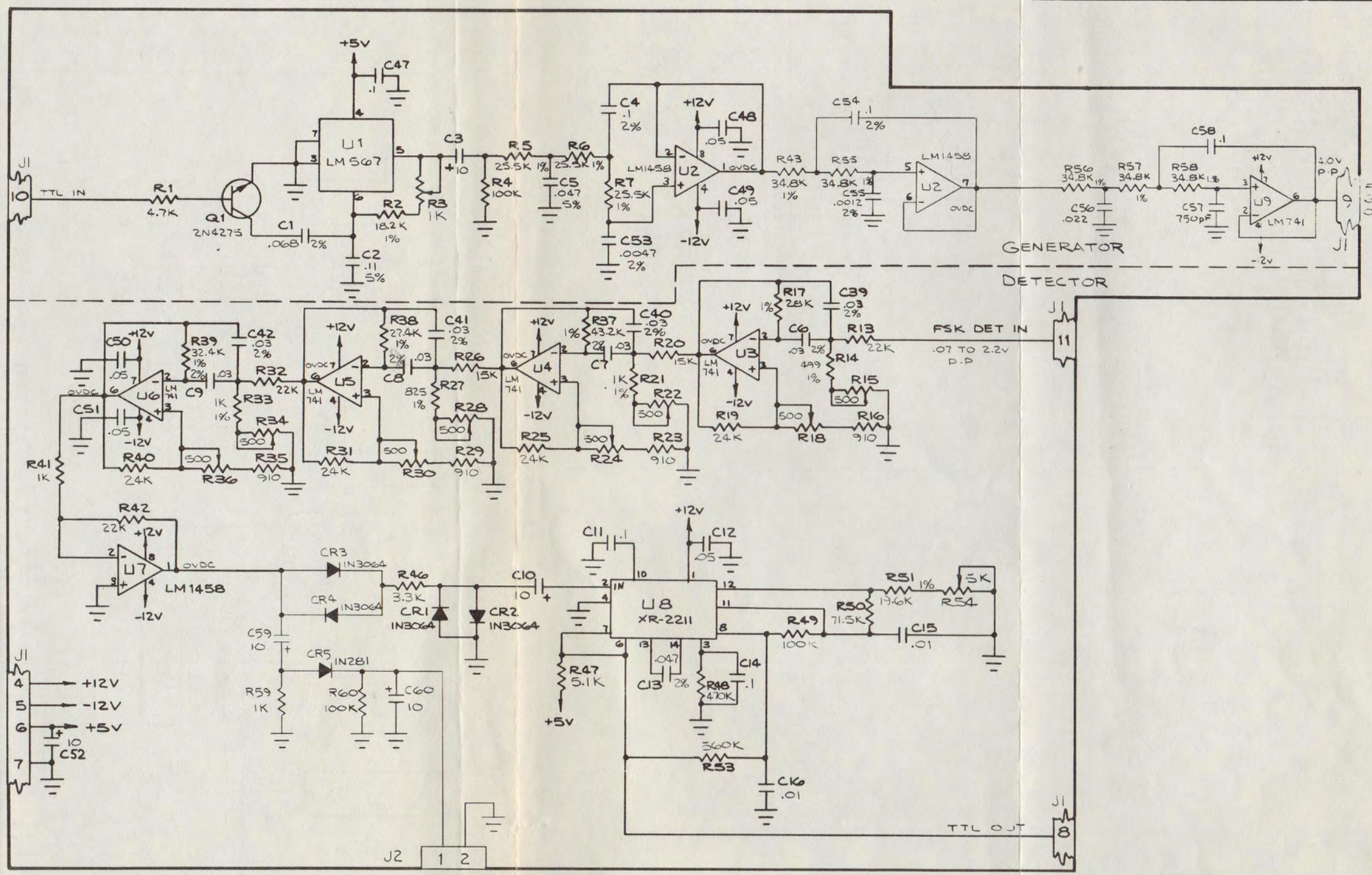

3. J1 CONNECTS TO J4 OF 7610-C MOTHER BD.
2. CAPACITOR VALUES ARE IN MICRO FARADS
1. RESISTOR VALUES ARE IN OHMS, 1/4W, 5%

NOTES, UNLESS OTHERWISE SPECIFIED;

QTY PER ASSY	ITEM NO.	EN NO.	PART NO.	DESCRIPTION	REF. DES.

LIST OF MATERIALS

REMOVE ALL BURRS AND SHARP EDGES

TOLERANCES UNLESS OTHERWISE SPECIFIED
.XX ± ~ ANGULAR
.XXX ± ~ ±

DO NOT SCALE THIS PRINT

		DATE
DRAWN BY	Sam Bay	1-12-77
CHK. BY	J. Tan	6/14/77
PROJ. ENG.	K. Cingle	4-22-77
MFG. ENG.		
APPD.	CWE	6/17/77
APPD.		
ECO NO.		

TFT TIME & FREQUENCY TECHNOLOGY INC.
3000 Olcott St., Santa Clara, California 95050
(408) 246-6385

TITLE FIG 6-1-5 SCHEMATIC 7610-C FSK MODEM

SIZE C DRAWING NO. 6601-1970 REV. B

SCALE ~ SHT. 1 OF 1

DWG. NO.

If You Didn't Get This From My Site,
Then It Was Stolen From...
www.SteamPoweredRadio.Com

Model 7610 SCA Gen & Det BD Opt 4 Assembly # 6608-1630

Ckt. Ref.	Description	TFT Stock No.
C1	Factory Select	
C2	Factory Select	
C3	Factory Select	
C4	Factory Select	
C5	Factory Select	
C6	Factory Select	
C7	Cap Tan 10MFD 20V 10%	1008-0100
C8	Cap Cer Disc .1UF 12V	1005-0100
C9	Cap Tan 1UF 3KV	1008-0011
C10	Cap Cer Disc .05MFD	1005-5039
C11	Cap Cer Disc 001UF	1005-1049
C12	Factory Select	
C13	Cap Poly .018MFD 100V	1002-0181
C14	Cap Poly .1MFD 100V	1002-0010
C15	Cap Mica 430pF	1001-0431
C16	Cap Tan 10MFD 20V 10%	1008-0100
C17	Cap Tan 10MFD 20V 10%	1008-0100
C18	Cap Tan 10MFD 20V 10%	1008-0100
C19	Cap Mica 100pF	1001-0102
C20	Factory Select	
C21	Cap Cer Disc .05MFD	1005-5039
C22	Cap Mica 910pF	1001-0911
C23	Cap Poly .0056MFD 100V	1002-0562
C24	Cap Mica 22pF	1001-0220
C25	Cap Tan 1UF 3KV	1008-0011
C26	Cap Mica 150pF	1001-0151
C27	Cap Mica 39pF	1001-0390
C28	Cap Cer Disc .1UF 12V	1005-0100
C29	Cap Poly .0022MFD 100V	1002-0221
L1	Factory Select	
L2	Factory Select	
L3	Factory Select	
L4	Choke 150UH	1530-0151
L5	Choke 150UH	1530-0151
R1	Pot PC MT 1K 1T	1072-1001
R2	Pot PC MT 2K 1T	1070-2001
R3	Res Var PC MT 2K 10T	1069-2001
R4	Res Var PC MT 1K 10T	1069-2001
R5	Res Car Comp 1/4W 5% 4.7K	1065-2001
R6	Res MT FLM 1/8W 1% 3.16K	1061-3161
R7	Res Car Comp 1/4W 5% 18K	1065-1802
R8	Res Car Comp 1/4W 5% 8.2K	1065-8201

Model 7610 SCA Gen & Det BD Opt 4 Assembly # 6608-1630

Ckt. Ref.	Description	TFT Stock No.
R9	Res Car Comp 1/4W 5% 18K	1065-1802
R10	Res Car Comp 1/4W 5% 8.2K	1065-8201
R11	Res Car Comp 1/4W 5% 1K	1065-1001
R12	Res Car Comp 1/4W 5% 1K	1065-1001
R13	Res Car Comp 1/4W 5% 4.7K	1065-4701
R14	Res Car Comp 1/4W 5% 4.7K	1065-4701
R15	Res Car Comp 1/4W 5% 10K	1065-1002
R16	Res MT FLM 1/8W 1% 1.47K	1061-1471
R17	Res MT FLM 1/8W 1% 10K	1061-1002
R18	Res MT FLM 1/8W 1% 3.16K	1061-3161
R19	Res Car Comp 1/4W 5% 4.7K	1065-4701
R20	Factory Select	
R21	Factory Select	
R22	Factory Select	
R23	Res Car Comp 1/4W 5% 1K	1065-1001
R24	Res Car Comp 1/4W 5% 1K	1065-1001
R25	Res Car Comp 1/4W 5% 2.2K	1065-2201
R26	Res Car Comp 1/4W 5% 4.7K	1065-4701
U1	I/C NE565A	1100-0565
U2	I/C LM 741CN	1100-0741
U3	I/C LM 741CN	1100-0741
U4	I/C LM 741CN	1100-0566
U5	I/C LM 302	1100-0302
U6	I/C LM 301	1100-0301
	PC BD 7610 SCA Modem	1600-1630
	Socket, I/C 8 Pin	2250-1008
	Socket, I/C 14 Pin	2250-1014

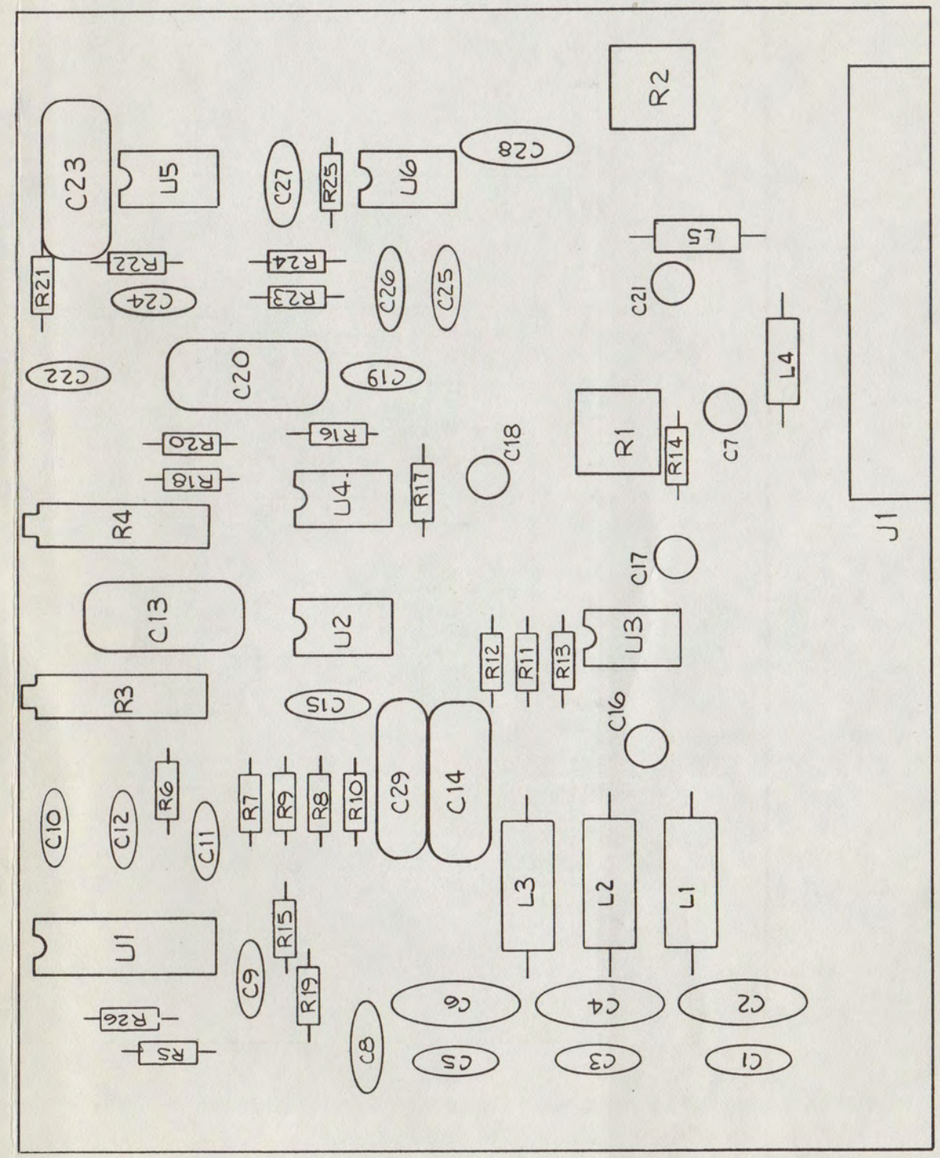

6608-1630
7610 SCA DET & GEN BOARD
SCHEMATIC: 6601-1890

www.SteamPoweredRadio.Com

NEXT ASSY	USED ON
	7610

REVISIONS					
SYM	DESCRIPTION	DR	CHK	AUTH	DATE
A					

If You Didn't Get This From My Site,
Then It Was Stolen From...
www.SteamPoweredRadio.Com

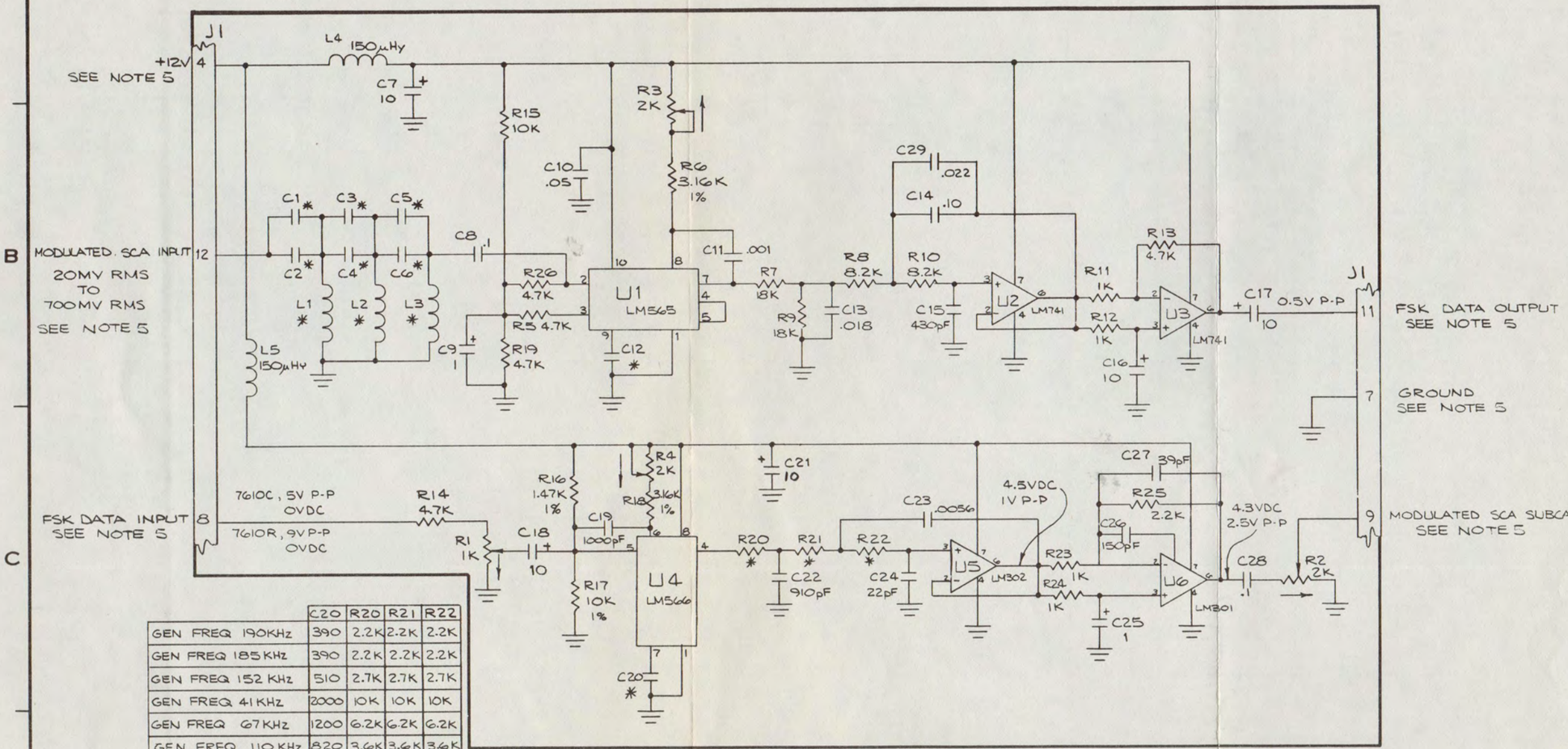

	C20	R20	R21	R22
GEN FREQ 190KHz	390	2.2K	2.2K	2.2K
GEN FREQ 185KHz	390	2.2K	2.2K	2.2K
GEN FREQ 152 KHz	510	2.7K	2.7K	2.7K
GEN FREQ 41KHz	2000	10K	10K	10K
GEN FREQ 67KHz	1200	6.2K	6.2K	6.2K
GEN FREQ 110KHz	820	3.6K	3.6K	3.6K
GEN FREQ 26KHz	3000	15K	15K	15K
GEN FREQ 39KHz	2000	10K	10K	10K

DET FREQ 190 KHz	560	1000	39	750	33	750	560	390μH	330μH	390μH
DET FREQ 185 KHz	560	1000	39	750	33	750	560	390μH	330μH	390μH
DET FREQ 152 KHz	910	1000	56	910	47	910	750	470μH	390μH	470μH
DET FREQ 110KHz	—	2700	360	1000	360	1000	1000	680μH	560μH	680μH
DET FREQ 26KHz	2000	10000	—	56000	—	56000	4700	2.7MH	2.2MH	3.3MH
DET FREQ 39KHz	—	10000	—	5100	—	5100	3000	2.2MH	2.2MH	2.7MH
DET FREQ 41KHz	—	10000	—	5100	—	5100	3000	2.2MH	2.2MH	2.2MH
DET FREQ 67KHz	1000	3300	—	2200	—	2200	1700	1MH	1MH	1MH
	C1	C2	C3	C4	C5	C6	C12	L1	L2	L3

5. 7610C: J1 CONNECTS THRU A CABLE TO J3 OF MOTHER BD.
   7610R: J1 CONNECTS TO J9 MOTHER BD.
4. CAPACITOR VALUES IN TABLE AT LEFT ARE IN PICOFARADS
3. ARROW INDICATES CLOCKWISE ROTATION ON POT.
2. RESISTOR VALUES ARE IN OHMS, 1/4W, 5%
1. CAPACITOR VALUES ARE MICROFARADS

NOTES, UNLESS OTHERWISE SPECIFIED;

QTY PER ASSY	ITEM NO.	EN NO.	PART NO.	DESCRIPTION	REF. DES.

LIST OF MATERIALS

REMOVE ALL BURRS AND SHARP EDGES

TOLERANCES UNLESS OTHERWISE SPECIFIED
.XX ± ~ ANGULAR
.XXX ± ~ ±

DO NOT SCALE THIS PRINT

		DATE
DRAWN BY	Dan Bay	1-11-77
CHK. BY	Jan	6/14/77
PROJ. ENG.	CWE	6/17/77
MFG. ENG.		
APPD.	CWE	6/17/77
APPD.		
ECO NO.		

TFT TIME & FREQUENCY TECHNOLOGY INC.
3000 Olcott St., Santa Clara, California 95050
(408) 246-6365

TITLE FIG. 6-1-6
SCA GEN & DET
MODEL 7610C/R

SIZE C | DRAWING NO. 6601-1890 | REV. A
SCALE ~ | SHT. 1 OF 1

DWG. NO.

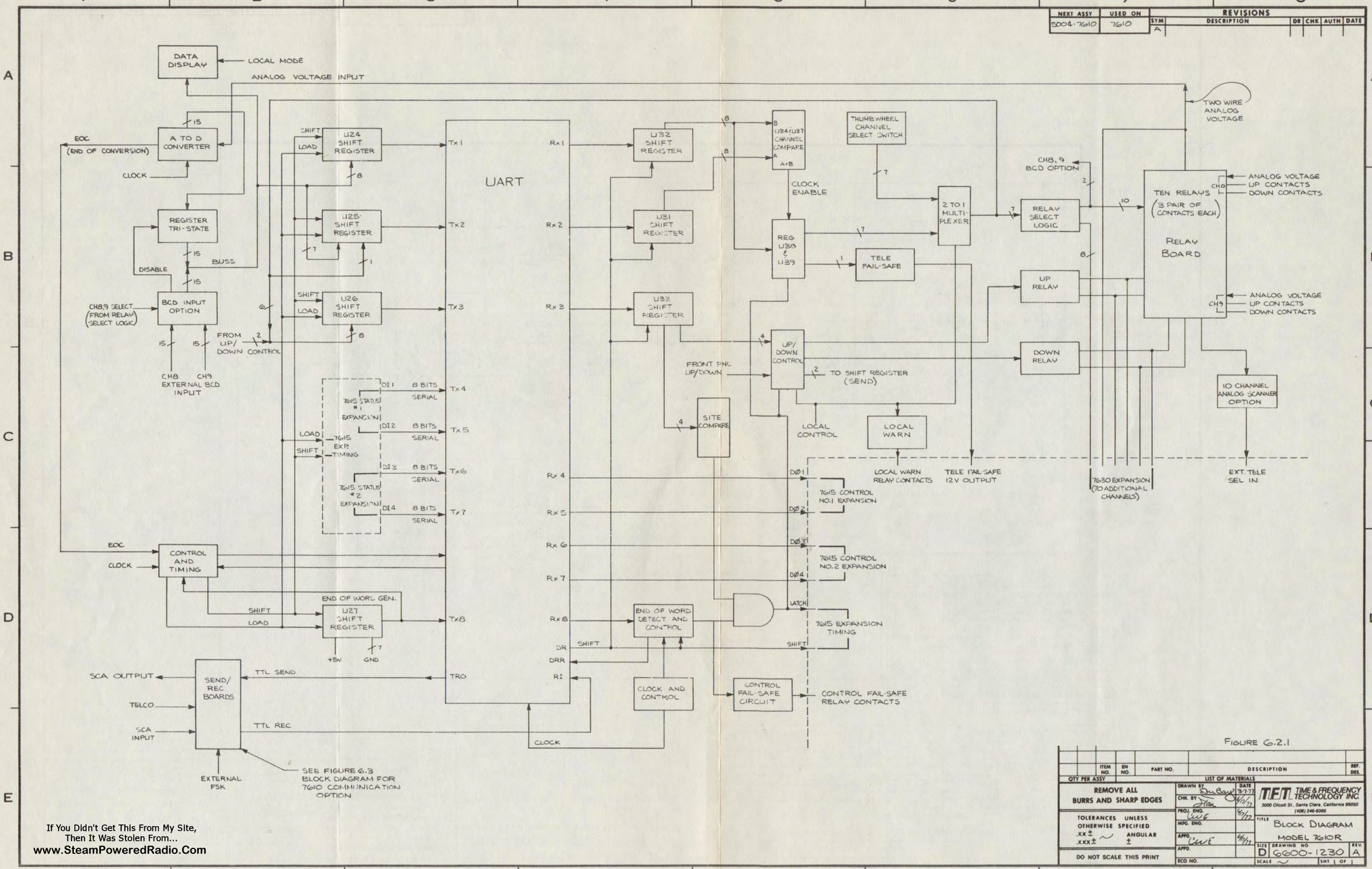

FIGURE 6.2.1

NEXT ASSY	USED ON
5004-7610	7610

REVISIONS

SYM	DESCRIPTION	DR	CHK	AUTH	DATE
A					

QTY PER ASSY	ITEM NO.	EN NO.	PART NO.	DESCRIPTION	REF. DES.

LIST OF MATERIALS

REMOVE ALL BURRS AND SHARP EDGES

TOLERANCES UNLESS OTHERWISE SPECIFIED .XX ± .XXX ± ANGULAR ±

DO NOT SCALE THIS PRINT

		DATE
DRAWN BY		3-7-77
CHK. BY		6/1/77
PROJ. ENG.		6/7/77
MFG. ENG.		
APPD.		6/8/77
APPD.		
ECO NO.		

TFT TIME & FREQUENCY TECHNOLOGY INC.
3000 Olcott St., Santa Clara, California 95050
(408) 246-6365

TITLE: BLOCK DIAGRAM MODEL 7610R

SIZE D | DRAWING NO. 6600-1230 | REV. A

SCALE ~ | SHT 1 OF 1

DWG. NO.

If You Didn't Get This From My Site,
Then It Was Stolen From...
www.SteamPoweredRadio.Com

NEXT ASSY	USED ON
5004-7610	7610

REVISIONS

SYM	DESCRIPTION	DR	CHK	AUTH	DATE
B	REVISED PER ECO	TD		366	4-26-77

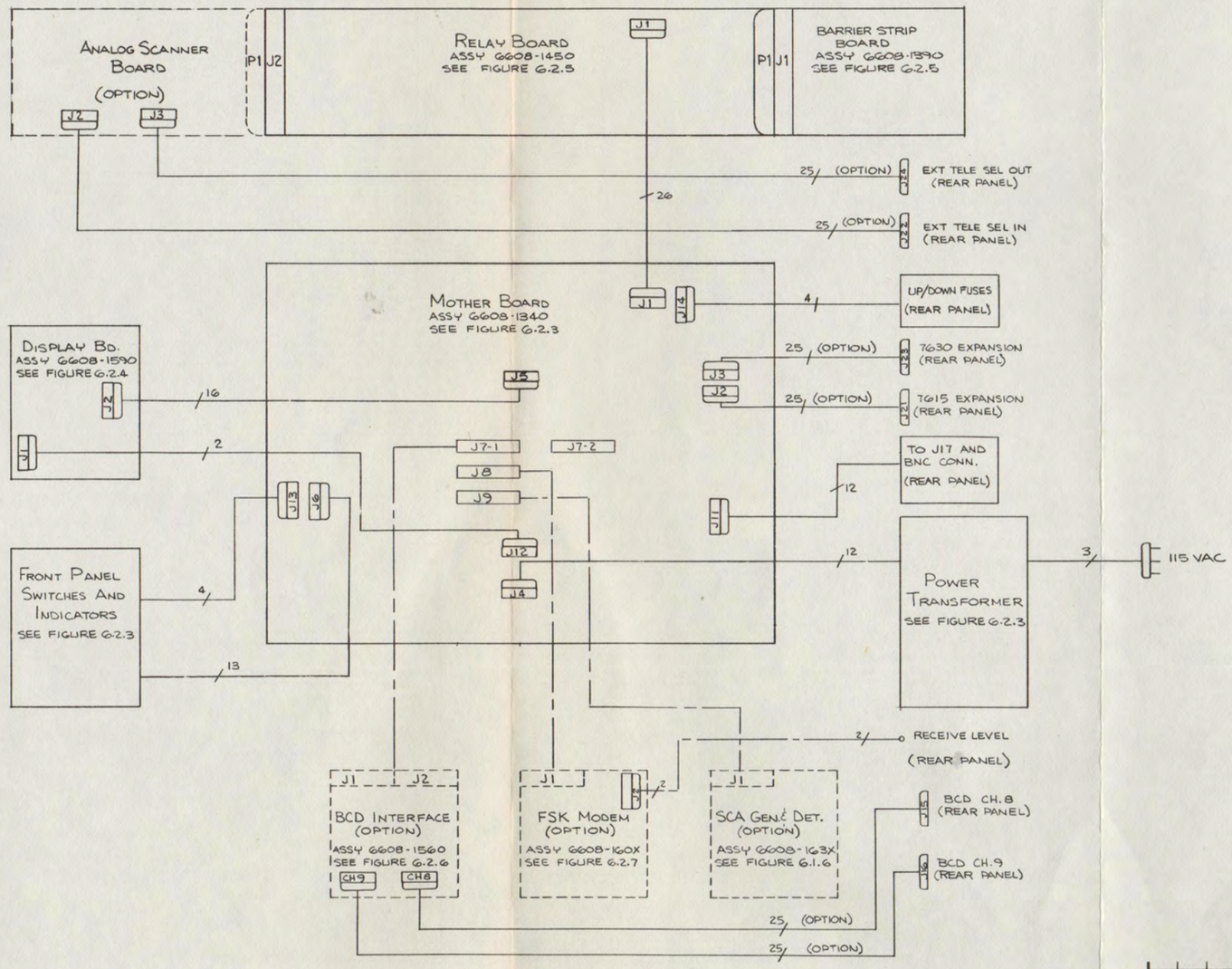

FIGURE 6.2.2

QTY PER ASSY	ITEM NO.	EN NO.	PART NO.	DESCRIPTION	REF. DES.

LIST OF MATERIALS

REMOVE ALL BURRS AND SHARP EDGES

TOLERANCES UNLESS OTHERWISE SPECIFIED .XX ± .XXX ± ~ ANGULAR ±

DO NOT SCALE THIS PRINT

DRAWN BY [signature] DATE 3-9-77
CHK. BY [signature] 6/7/77
PROJ. ENG. K. Angle 4-27-77
MFG. ENG.
APPD. [signature] 6/7/77
APPD.
ECO NO.

TET TIME & FREQUENCY TECHNOLOGY INC.
3000 Olcott St., Santa Clara, California 95050
(408) 246-6365

TITLE WIRE DIAGRAM MODEL 7610R

SIZE D DRAWING NO. 6600-1260 REV. B
SCALE — SHT. OF

DWG. NO.

If You Didn't Get This From My Site,
Then It Was Stolen From...
www.SteamPoweredRadio.Com

Model 7610-R Mother Board Assembly # 6608-1340

Ckt. Ref.	Description	TFT Stock No.
C1	Cap Cer Disc .1UF 12V	1005-0100
C2	Cap Elect 500MFD 25V	1010-0511
C3	Cap Tan 10MFD 20V 10%	1008-0100
C4	Cap Elect 500MFD 25V	1010-0511
C5	Cap Tan 10MFD 20V 10%	1008-0100
C6	Cap Elect 500MFD 25V	1010-0511
C7	Cap Tan 10MFD 20V 10%	1008-0100
C8	Cap Elect 500MFD 25V	1010-0511
C9	Cap Tan 10MFD 20V 10%	1008-0100
C10	Cap Elect 8000UF 25V	1010-8000
C11	Cap Tan 10MFD 20V 10%	1008-0100
C12	Cap Elect 500MFD 25V	1010-0511
C13	Cap Cer Disc .01MFD	1005-1039
C14	Cap Tan 10MFD 20V 10%	1008-0100
C15	Cap Mica 10pF	1001-0100
C16	Cap Cer Disc .05MFD	1005-5039
C17	Cap Cer Disc .05MFD	1005-5039
C18	Cap Poly Carb .022MFD 50V	1006-0220
C19	Cap Tan 10MFD 20V 10%	1008-0101
C20	Cap Poly .1MFD 100V	1002-0010
C21	Cap Cer Disc 001UF	1005-1049
C22	Cap Cer Disc .05MFD	1005-5039
C23	Cap Cer Disc .1UF 12V	1005-0100
C24	Cap Cer Disc .01MFD	1005-1039
C25	Cap Poly Carb .0013MFD 50V	1006-0013
C26	Cap Cer Disc 500pF 5%	1005-0501
C27	Cap Cer Disc 500pF 5%	1005-0501
C28	Cap Cer Disc 500pF 5%	1005-0501
C29	Cap Cer Disc 500pF 5%	1005-0501
C30	Cap Cer Disc .01MFD	1005-1039
C31	Cap Cer Disc .01MFD	1005-1039
C32	Cap Cer Disc .01MFD	1005-1039
C33	Cap Cer Disc .01MFD	1005-1039
C34	Cap Cer Disc .01MFD	1005-1039
C35	Cap Cer Disc .01MFD	1005-1039
C36	Cap Cer Disc .1UF 12V	1005-0100
C37	Cap Poly Carb .047MFD 50V	1006-0470
C38	Cap Cer Disc .01MFD	1005-1039
C39	Cap Cer Disc .1 UF 12V	1005-0100
C40	Cap Cer Disc .05MFD	1005-5039
C41	Cap Tan 10MFD 20V 10%	1008-0100
C42	Cap Tan 100MFD 20V 20%	1008-0102

Model 7610-R Mother Board Assembly # 6608-1340

Ckt. Ref.	Description	TFT Stock No.
C43	Cap Cer Disc .05MFD	1005-5039
C44	Cap Cer Disc .05MFD	1005-5039
C45	Cap Cer Disc .05MFD	1005-5039
C46	Cap Cer Disc .1UF 12V	1005-0100
C47	Cap Cer Disc .1UF 12V	1005-0100
C48	Cap Cer Disc .1UF 12V	1005-0100
C49	Cap Cer Disc .1UF 12V	1005-0100
C50	Cap Cer Disc .1UF 12V	1005-0100
C51	Cap Cer Disc .1UF 12V	1005-0100
C52	Cap Cer Disc .1UF 12V	1005-0100
C53	Cap Cer Disc 500pF 5%	1005-0501
C54	Cap Cer Disc .05MFD	1005-5039
C55	Cap Cer Disc 500pF 5%	1005-0501
C56	Cap Cer Disc .05MFD	1005-5039
C57	Cap Tan 10MFD 20V 10%	1008-0101
C58	Cap Cer Disc .01MFD	1005-1039
C59	Cap Cer Disc .01MFD	1005-1039
C60	Cap Cer Disc .01MFD	1005-1039
CR1	Dio Rect 1N4001	1284-4002
CR2	Dio Rect 1N4001	1284-4002
CR3	Dio Rect 1N4001	1284-4002
CR4	Dio Rect 1N4001	1284-4002
CR5	Dio Rect 1N4001	1284-4002
CR6	Dio Rect 1N4001	1284-4002
CR7	Dio Rect 1N4001	1284-4002
CR8	Dio Rect 1N4001	1284-4002
CR9	Dio Rect 1N4001	1284-4002
CR10	Dio Rect 1N4001	1284-4002
CR11	Dio Rect 1N4001	1284-4002
CR12	Dio Rect 1N4001	1284-4002
CR13	Dio ZNR 1N4737	1283-4737
CR14	Dio ZNR 1N4737	1283-4737
CR15	Dio ZNR 1N4739	1283-4739
CR16	Dio 1N3064	1281-3064
CR17	Dio 1N281	1280-0281
CR18	Dio 1N281	1280-0281
CR19	Dio Rect 1N4001	1284-4002
CR20	Dio Rect 1N4001	1284-4002
CR21	Dio Rect 1N4001	1284-4002
CR22	Dio Rect 1N4001	1284-4002
CR23	Dio Rect 1N4001	1284-4002
CR24	Dio 1N3064	1281-3064

Model 7610-R Mother Board Assembly # 6608-1340

Ckt. Ref.	Description	TFT Stock No.
CR25	Dio Rect 1N4001	1284-4002
CR26	Dio Rect 1N4001	1284-4002
CR27	Dio Rect 1N4001	1284-4002
CR28	Dio 1N281	1280-0281
CR29	Dio 1N281	1280-0281
J1	Conn 26 Pin M Header	2250-6512
J2	Conn 26 Pin M Header	2250-6512
J3	Conn 26 Pin M Header	2250-6512
J6A	Plug 6 Pin	2250-6006
J6B	Plug 7 Pin Molex	2250-6007
J11	Conn 12 Pin Molex	2250-6012
J12	Plug 2 Pin	2250-6002
J13	Plug 4 Pin	2250-6004
K1A	Socket Relay	2250-0005
K1B	Relay 12V 4 Pole	1880-0006
K2A	Socket Relay	2250-0005
K2B	Relay 12V 4 Pole	1880-0006
K3	Relay A2 A2530-08-1	1880-0003
K4	Relay A2 A2530-08-1	1880-0003
Q1	Xistor 2N4275	1271-4275
Q2	Xistor 2N4275	1271-4275
Q3	Xistor 2N4121	1271-4121
Q4	Xistor 2N4275	1271-4275
Q5	Fet E507	1271-0507
Q6	Xistor 2N4274	1271-4274
Q7	Xistor 2N5089	1271-5089
Q8	Xistor 2N4121	1271-4121
Q9	Xistor 2N5089	1271-5089
Q10	Xistor 2N5089	1271-5089
R1	Res Car Comp 1/4W 5% 4.7K	1065-4701
R2	Res Car Comp 1/4W 5% 4.7K	1065-4701
R3	Res Car Comp 1/4W 5% 1K	1065-1001
R4	Pot 10K 1T	1072-1002
R5	Res Car Comp 1/4W 5% 390	1065-0390
R6	Cap Elect 500MFD 25V	1010-0511
R7	Res Car Comp 1/4W 5% 150	1065-0150
R8	Res Car Comp 1/4W 5% 4.7K	1065-4701
R9	Res Car Comp 1/4W 5% 6.8K	1065-6801
R10	Res Car Comp 1/4W 5% 10K	1065-1002
R11	Res Car Comp 1/4W 5% 150	1065-0150
R12	Res Car Comp 1/4W 5% 4.7K	1065-4701
R13	Res Car Comp 1/4W 5% 5.6K	1065-5601

Model 7610-R Mother Board Assembly # 6608-1340

Ckt. Ref.	Description	TFT Stock No.
R14	Res Car Comp 1/4W 5% 4.7K	1065-4701
R15	Res Car Comp 1/4W 5% 4.7K	1065-4701
R16	Res Car Comp 1/4W 5% 10K	1065-1002
R17	Res Car Comp 1/4W 5% 27K	1065-2702
R18	Res Car Comp 1/4W 5% 68K	1065-6802
R19	Res MT FLM 1/8W 1% 100K	1061-1003
R20	Res MT FLM 1/8W 1% 75.0K	1061-7502
R21	Pot PC MT 20K 1T	1072-2002
R22	Res Car Comp 1/4W 5% 120K	1065-1203
R23	Res Car Comp 1/4W 5% 33K	1065-3302
R24	Res MT FLM 1/8W 1% 100K	1061-1003
R25	Res Car Comp 1/4W 5% 1M	1065-1004
R26	Res Car Comp 1/4W 5% 1M	1065-1004
R27	Res Car Comp 1/4W 5% 1.2K	1065-1201
R28	Res Car Comp 1/4W 5% 1.2K	1065-1201
R29	Res Car Comp 1/4W 5% 1.2K	1065-1201
R30	Res Car Comp 1/4W 5% 1.2K	1065-1201
R31	Res Car Comp 1/4W 5% 470K	1065-4703
R32	Pot PC MT 5K 1T	1072-5001
R33	Res MT FLM 1/8W 1% 17.8K	1061-1782
R34	Res MT FLM 1/8W 1% 12.1	1061-1212
R35	Res Car Comp 1/4W 5% 4.7K	1065-4701
R36	Res Car Comp 1/4W 5% 4.7K	1065-4701
R37	Res Car Comp 1/4W 5% 4.7K	1065-4701
R38	Res Car Comp 1/4W 5% 4.7K	1065-4701
R39	Res Car Comp 1/4W 5% 4.7K	1065-4701
R40	Res Car Comp 1/4W 5% 4.7K	1065-4701
R41	Res Car Comp 1/4W 5% 4.7K	1065-4701
R42	Res Car Comp 1/4W 5% 4.7K	1065-4701
R43	Res Car Comp 1/4W 5% 4.7K	1065-4701
R44	Res Car Comp 1/4W 5% 15K	1065-1502
R45	Res Car Comp 1/4W 5% 15K	1065-1502
R46	Res MT FLM 1/8W 1% 3.32K	1061-3301
R47	Pot PC MT 500 OHM 1T	1072-0500
R48	Res Car Comp 1/4W 5% 4.7K	1065-4701
R49	Res Car Comp 1/4W 5% 2.2K	1065-2201
R50	Res Car Comp 1/4W 5% 4.7K	1065-4701
R51	Res Car Comp 1/4W 5% 2.2K	1065-2201
R52	Res Car Comp 1/4W 5% 4.7K	1065-4701
R53	Res Car Comp 1/4W 5% 10K	1065-1002
R54	Res Car Comp 1/4W 5% 4.7K	1065-4701
R55	Res Car Comp 1/4W 5% 7.5K	1065-7501

Model 7610-R Mother Board Assembly # 6608-1340

Ckt. Ref.	Description	TFT Stock No.
R56	Res Car Comp 1/4W 5% 5.6K	1065-5601
R57	Res Car Comp 1/4W 5% 330K	1065-3303
R58	Pot PC MT 500K	1072-5003
R59	Res Car Comp 1/4W 5% 470	1065-0470
R60	Res Car Comp 1/4W 5% 22K	1065-2202
R61	Res Car Comp 1/4W 5% 33K	1065-3302
R62	Res Car Comp 1W 5% 100	1067-1525
R63	Res Car Comp 1/4W 5% 15K	1065-1502
R64	Res Car Comp 1/4W 5% 15K	1065-1502
R65	Res Car Comp 1/4W 5% 6.8K	1065-6801
R66	Res Car Comp 1/4W 5% 470	1065-0470
R67	Res Car Comp 1/4W 5% 4.7K	1065-4701
SW1	Switch 14 Pin Dip	1800-2067
T1	XFMR 600 OHM 1.1	1500-0600
U1	I/C LM 342P-5-0	1100-4205
U2	I/C Reg 1/2 Amp +12V	1100-4212
U4	I/C Reg 1/2 Amp +12V	1100-4212
U3	I/C Reg 1/2 Amp 12V	1100-2012
U5	I/C Reg 1/2 Amp 12V	1100-2012
U6	I/C LM340T-05	1100-7805
U7	I/C LM340T-05	1100-7805
U8	I/C LM741CN	1100-0741
U9	Optic Isolator 5082-4350	1099-0002
U10	Optic Isolator 5082-4350	1099-0002
U11	Optic Isolator 5082-4350	1099-0002
U12	I/C LD110CJ	1100-0110
U13	I/C LM555CN	1100-0555
U14	I/C SN74LS04N	1101-7404
U15	I/C MM74C173N	1102-4173
U16	I/C MM74C173N	1102-4173
U17	I/C MM74C173N	1102-4173
U18	I/C MM74C173N	1102-4173
U19	I/C LD111CJ	1100-0111
U20	I/C SN7404N	1100-7404
U21	I/C MM74C161N	1102-0161
U22	I/C MM74C04	1102-7404
U23	I/C MM74C00N	1102-7400
U24	I/C MM74C165	1102-0165
U25	I/C MM74C165	1102-0165
U26	I/C MM74C165	1102-0165
U27	I/C MM74C165	1102-0165
U28	I/C MM5303	1100-5303

Model 7610-R Mother Board Assembly # 6608-1340

Ckt. Ref.	Description	TFT Stock No.
U29	I/C MM74C74N	1102-7474
U30	I/C SN74LS04N	1101-7404
U31	I/C MM74C164	1102-0164
U32	I/C MM74C164	1102-0164
U33	I/C MM74C164	1102-0164
U34	I/C MM74C74N	1102-7485
U35	I/C MM74C74N	1102-7485
U36	I/C MM74C08N	1102-7408
U37	I/C MM74C85N	1102-7485
U38	I/C MM74C174N	1102-0174
U39	I/C MM74C174N	1102-0174
U40	I/C MM74C157N	1101-0157
U41	I/C MM74C157N	1102-0157
U42	I/C LM567CN	1100-0567
U43	I/C MM74C161N	1102-0161
U44	I/C DS3632N	1102-3632
U45	I/C SN74LS00N	1101-7400
U46	I/C MM74C902	1102-4902
U47	I/C MM74C902	1102-4902
U48	I/C DM74LS174N	1101-7174
U49	I/C DM8160N	1100-8160
U50	I/C MM74L574N	1101-7474
U51	I/C DM74LS161N	1101-7161
U52	I/C DM74L586N	1101-7486
U53	I/C DM74LS502N	1101-7402
U54	I/C DM74L586N	1101-7486
U55	I/C DM74LS154N	1101-7154
U56	I/C DM7407N	1100-7407
U57	I/C DM7407N	1100-7407
U58	I/C DS3632N	1102-3632
U59	I/C DS3631N	1102-3631
U60	I/C MM74C902	1102-4902
U61	I/C MM74C08N	1102-7408
U63	I/C MM74C08N	1102-7408
U64	I/C MM74C04	1102-7404
U65	I/C MM74C04	1102-7404
	PC BD 7610-R Mother	1600-1340
	Heatsink 6071B	2010-6071
	Heatsink 6072B	2010-6072
	Nut Kep 4-40	2111-0001
	Tyton, QWK Tie	2140-0004
	Retainer Relay	2140-0026

Model 7610-R Mother Board Assembly # 6608-1340

Ckt. Ref.	Description	TFT Stock No.
	Tie Mounts TC141	2140-0141
	Socket, I/C 8 Pin	2250-1008
	Socket, I/C 14 Pin	2250-1014
	Socket, I/C 16 Pin	2250-1016
	Socket, I/C 24 Pin	2250-1024
	Socket, I/C 40 Pin	2250-1040
	Conn 12 Pin Molex	2250-6412

www.SteamPoweredRadio.Com

www.SteamPoweredRadio.Com

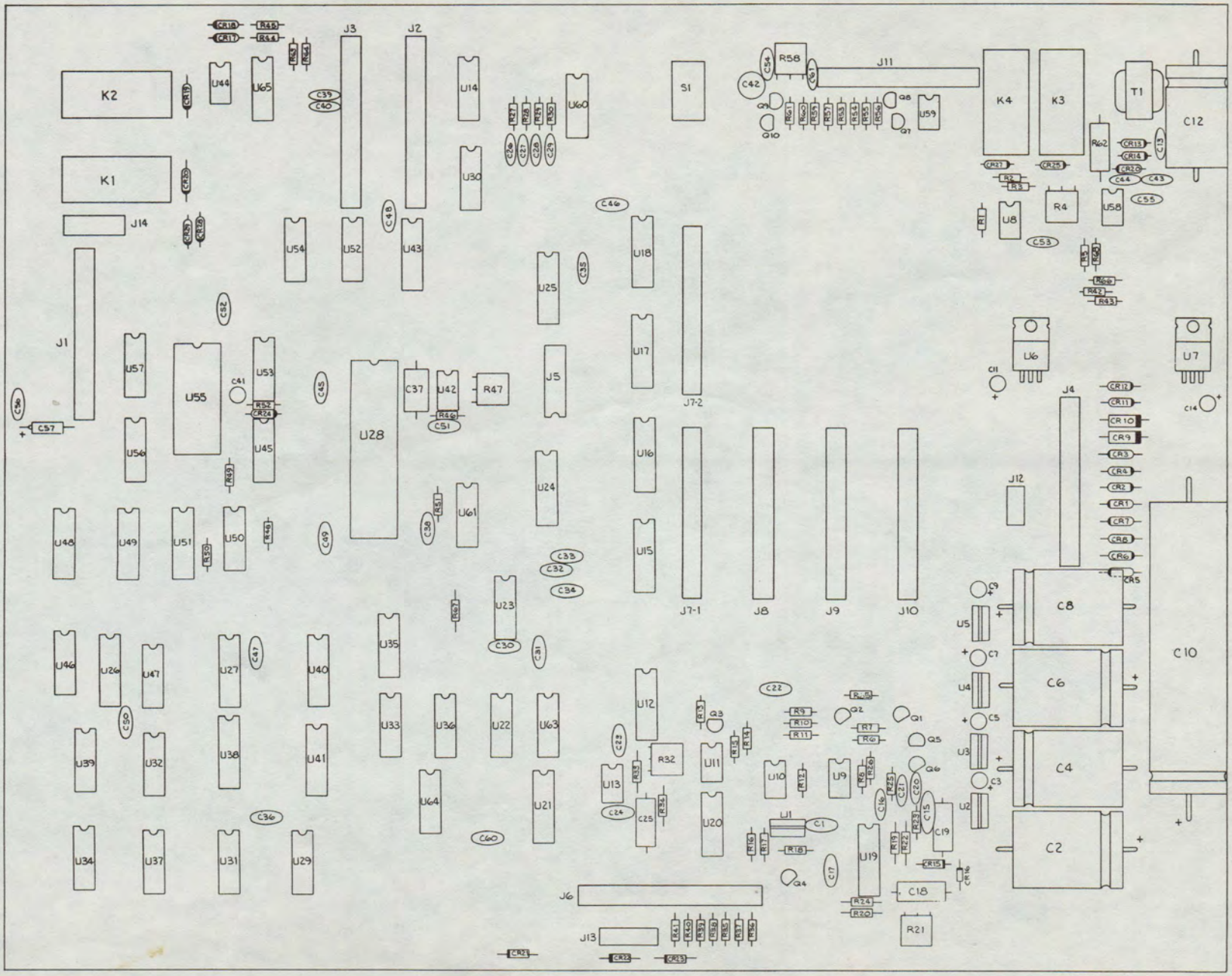

6608-1340
7610-R MOTHER BOARD
SCHEMATIC 6601-1720

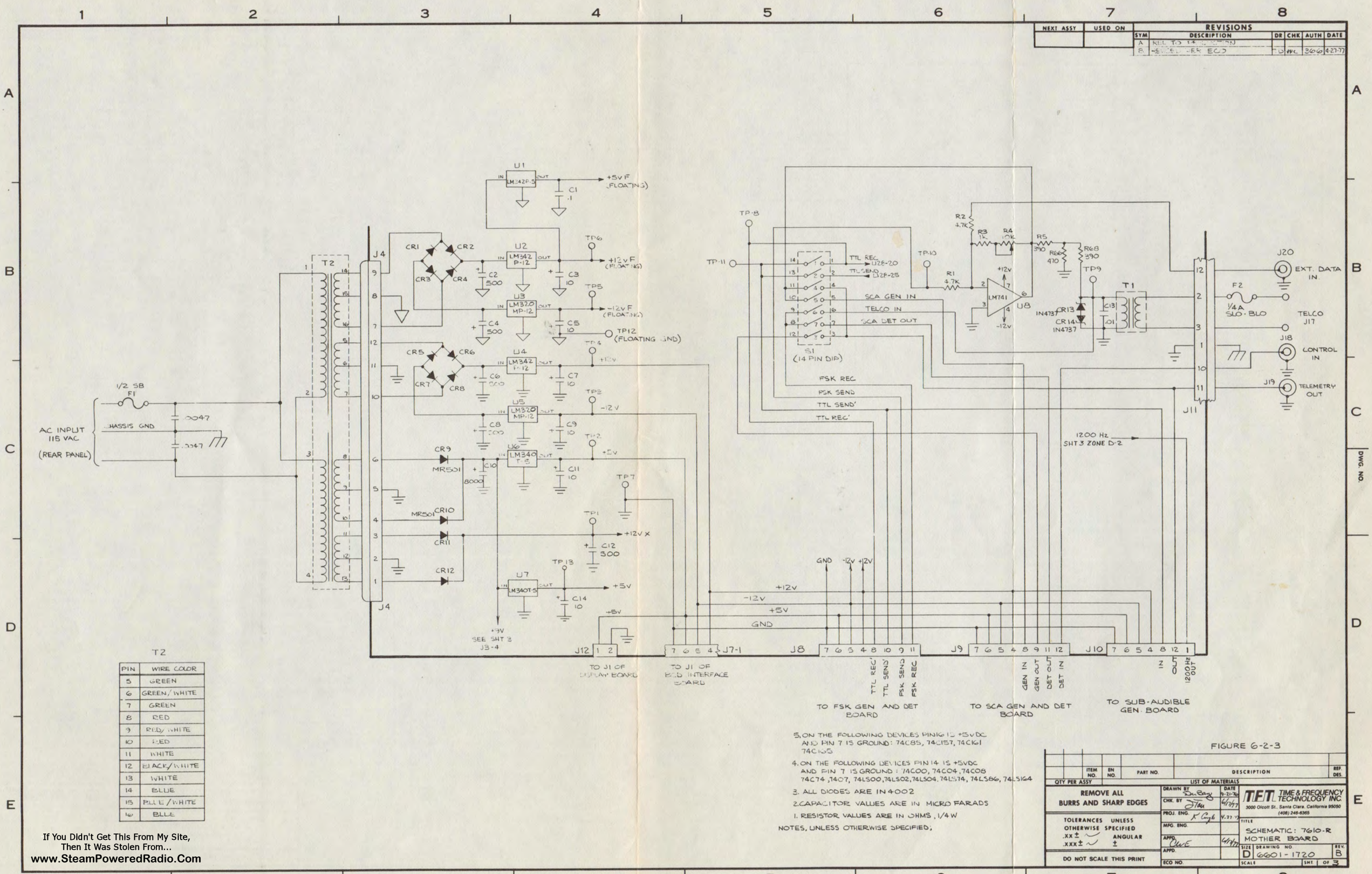

T2

PIN	WIRE COLOR
5	GREEN
6	GREEN/WHITE
7	GREEN
8	RED
9	RED/WHITE
10	RED
11	WHITE
12	BLACK/WHITE
13	WHITE
14	BLUE
15	BLUE/WHITE
16	BLUE

5. ON THE FOLLOWING DEVICES PIN 16 IS +5VDC AND PIN 7 IS GROUND: 74C85, 74C157, 74C161 74C165
4. ON THE FOLLOWING DEVICES PIN 14 IS +5VDC AND PIN 7 IS GROUND: 74C00, 74C04, 74C08 74C74, 74C07, 74LS00, 74LS02, 74LS04, 74LS74, 74LS86, 74LS164
3. ALL DIODES ARE IN4002
2. CAPACITOR VALUES ARE IN MICRO FARADS
1. RESISTOR VALUES ARE IN OHMS, 1/4W

NOTES, UNLESS OTHERWISE SPECIFIED;

FIGURE 6-2-3

QTY PER ASSY	ITEM NO.	EN NO.	PART NO.	DESCRIPTION	REF. DES.

LIST OF MATERIALS

REMOVE ALL BURRS AND SHARP EDGES

TOLERANCES UNLESS OTHERWISE SPECIFIED .XX ± ~ .XXX ± ~ ANGULAR ±

DO NOT SCALE THIS PRINT

DRAWN BY DuBay DATE 9-21-76
CHK. BY JTau 6/17/77
PROJ. ENG. K Cagle 4-27-77
MFG. ENG.
APPD. CWE 6/17/77
APPD.
ECO NO.

TFT TIME & FREQUENCY TECHNOLOGY INC.
3000 Olcott St., Santa Clara, California 95050
(408) 246-6365

TITLE SCHEMATIC: 7610-R MOTHER BOARD

SIZE D DRAWING NO. 6601-1720 REV. B

SCALE SHT 1 OF 3

DWG. NO.

If You Didn't Get This From My Site,
Then It Was Stolen From...
www.SteamPoweredRadio.Com

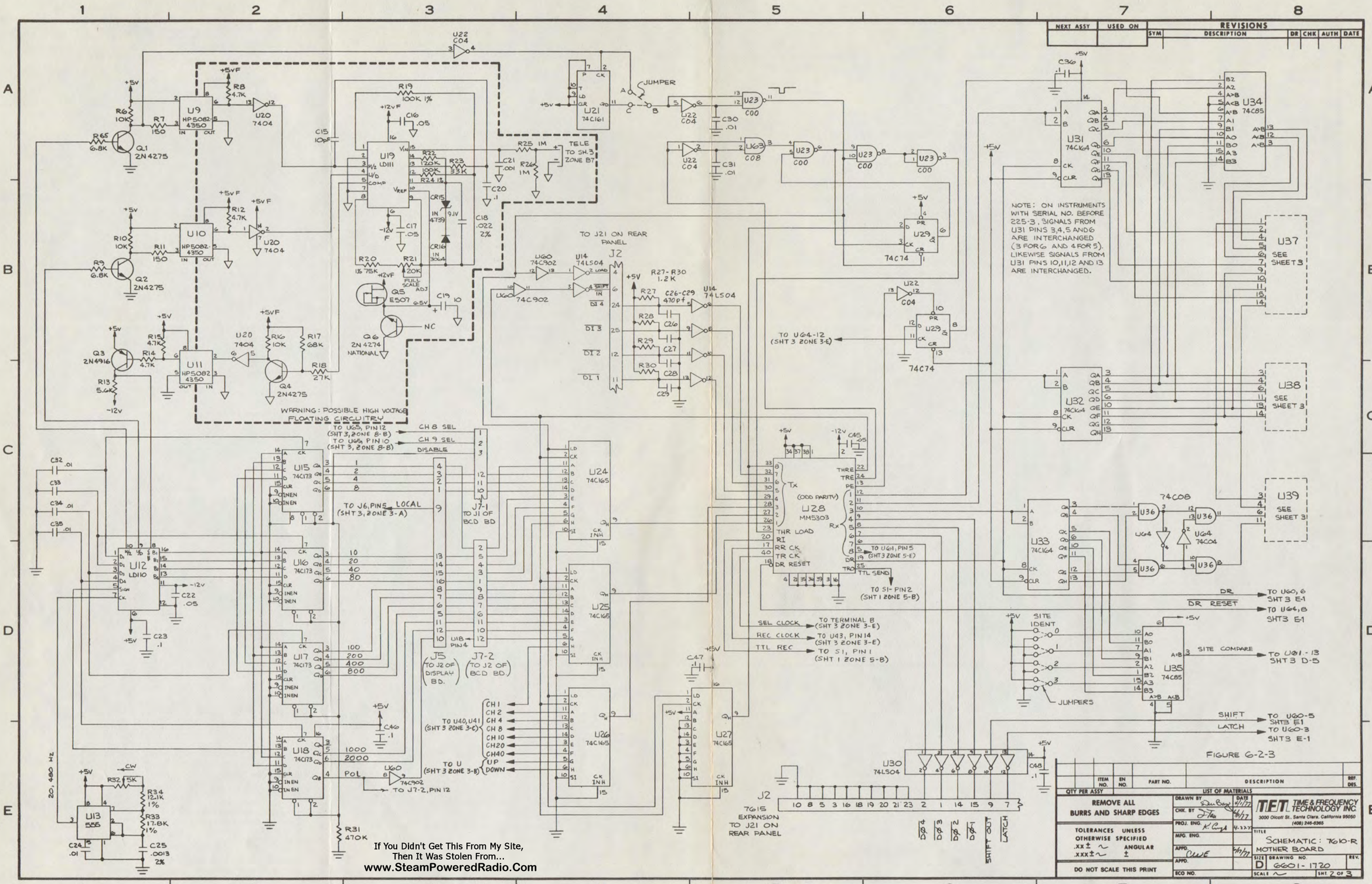

If You Didn't Get This From My Site,
Then It Was Stolen From...
www.SteamPoweredRadio.Com

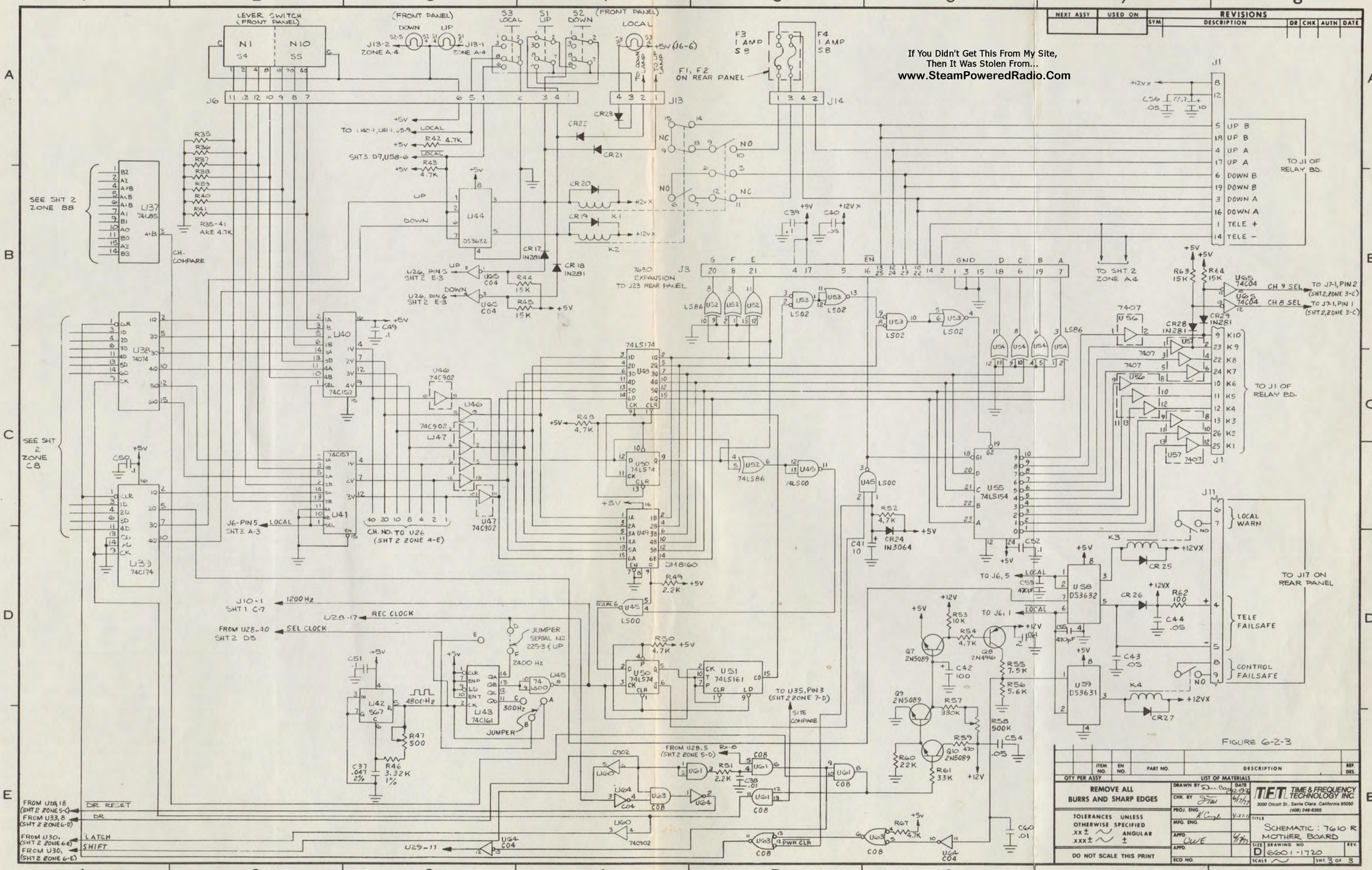

If You Didn't Get This From My Site,
Then It Was Stolen From...
www.SteamPoweredRadio.Com

FIGURE 6-2-3

NEXT ASSY	USED ON	REVISIONS				
		SYM	DESCRIPTION	DR	CHK	AUTH	DATE

QTY PER ASSY	ITEM NO.	EN NO.	PART NO.	DESCRIPTION	REF. DES.

LIST OF MATERIALS

REMOVE ALL BURRS AND SHARP EDGES

TOLERANCES UNLESS OTHERWISE SPECIFIED .XX ± .XXX ± ANGULAR ±

DO NOT SCALE THIS PRINT

DRAWN BY — DATE 12-19-72
CHK. BY — 6/17/77
PROJ. ENG. — 4-27-77
MFG. ENG.
APPD.
APPD.
ECO NO.

TFT TIME & FREQUENCY TECHNOLOGY INC.
3000 Olcott St., Santa Clara, California 95050
(408) 246-6365

TITLE: SCHEMATIC: 7610-R MOTHER BOARD

SIZE D — DRAWING NO. 6601-1720 — REV.

SCALE — SHT 3 OF 3

Display BD 7610-R Assembly # 6608-1590

Ckt. Ref.	Description	TFT Stock No.
C1	Cap Tan 10MFD 20V 10%	1008-0100
C2	Cap Cer Disc .1UF 12V	1005-0100
C3	Cap Cer Disc .1UF 12V	1005-0100
DS1	Led DL 701+1	1285-0701
DS2	Led DL704 8	1285-0704
DS3	Led DL704 8	1285-0704
DS4	Led DL704 8	1285-0704
DS5	Led DL704 8	1285-0704
R1	Res Car Comp 1/4W 5% 150	1065-0150
R2	Res Car Comp 1/4W 5% 120	1065-0120
R3	Res Car Comp 1/4W 5% 4.7K	1065-4701
R4	Res Car Comp 1/4W 5% 180	1065-0180
R5	Res Car Comp 1/4W 5% 180	1065-0180
R6	Res Car Comp 1/4W 5% 180	1065-0180
R7	Res Car Comp 1/4W 5% 180	1065-0180
R8	Res Car Comp 1/4W 5% 180	1065-0180
R9	Res Car Comp 1/4W 5% 180	1065-0180
R10	Res Car Comp 1/4W 5% 180	1065-0180
R11	Res Car Comp 1/4W 5% 180	1065-0180
R12	Res Car Comp 1/4W 5% 180	1065-0180
R13	Res Car Comp 1/4W 5% 180	1065-0180
R14	Res Car Comp 1/4W 5% 180	1065-0180
R15	Res Car Comp 1/4W 5% 180	1065-0180
R16	Res Car Comp 1/4W 5% 180	1065-0180
R17	Res Car Comp 1/4W 5% 180	1065-0180
R18	Res Car Comp 1/4W 5% 180	1065-0180
R19	Res Car Comp 1/4W 5% 180	1065-0180
R20	Res Car Comp 1/4W 5% 180	1065-0180
R21	Res Car Comp 1/4W 5% 180	1065-0180
R22	Res Car Comp 1/4W 5% 180	1065-0180
R23	Res Car Comp 1/4W 5% 180	1065-0180
R24	Res Car Comp 1/4W 5% 180	1065-0180
R25	Res Car Comp 1/4W 5% 180	1065-0180
R26	Res Car Comp 1/4W 5% 180	1065-0180
R27	Res Car Comp 1/4W 5% 180	1065-0180
R28	Res Car Comp 1/4W 5% 180	1065-0180
R29	Res Car Comp 1/4W 5% 180	1065-0180
R30	Res Car Comp 1/4W 5% 180	1065-0180
R31	Res Car Comp 1/4W 5% 180	1065-0180
U1	I/C MM74248N	1102-7448
U2	I/C MM74248N	1102-7448
U3	I/C MM74248N	1102-7448

Display BD 7610-R Assembly # 6608-1590

Ckt. Ref.	Description	TFT Stock No.
U4	I/C MM74248N	1102-7448
	Xistor 2N4275	1271-4275
	Socket, I/C 14 Pin	2250-1014
	Socket, I/C 16 Pin	2250-1016
	Plug 2 Pin	2250-6002
	PC BD 7610-R Display	1600-1590REVA

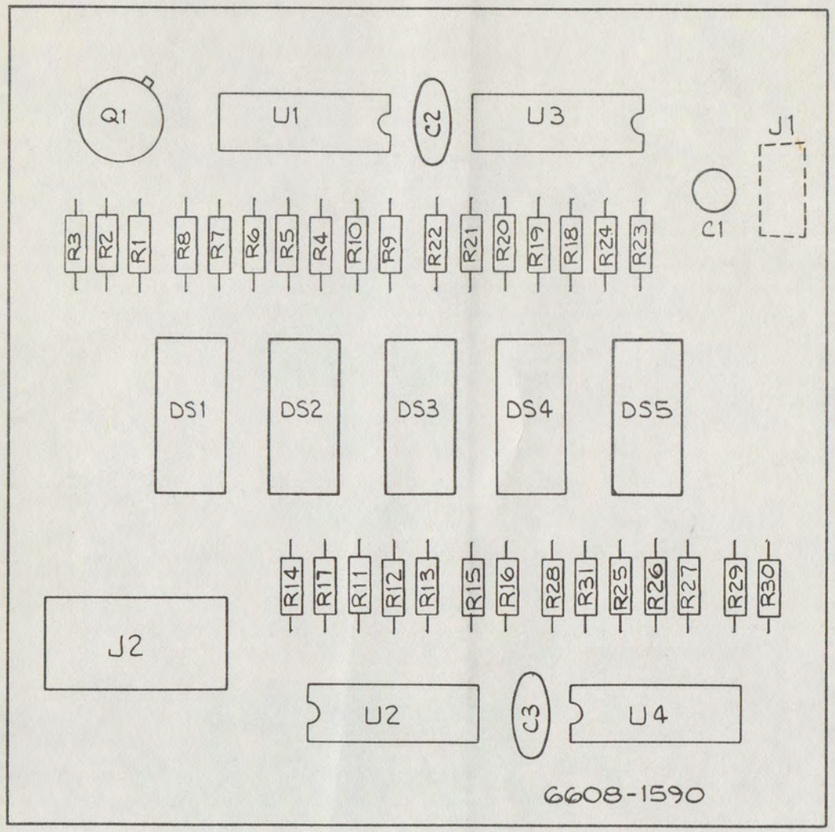

6608-1590
7610-R DISPLAY BOARD
SCHEMATIC: 6601-1870

www.SteamPoweredRadio.Com

DWG. NO.

NEXT ASSY	USED ON
	7610-R

REVISIONS

SYM	DESCRIPTION	DR	CHK	AUTH	DATE
A					

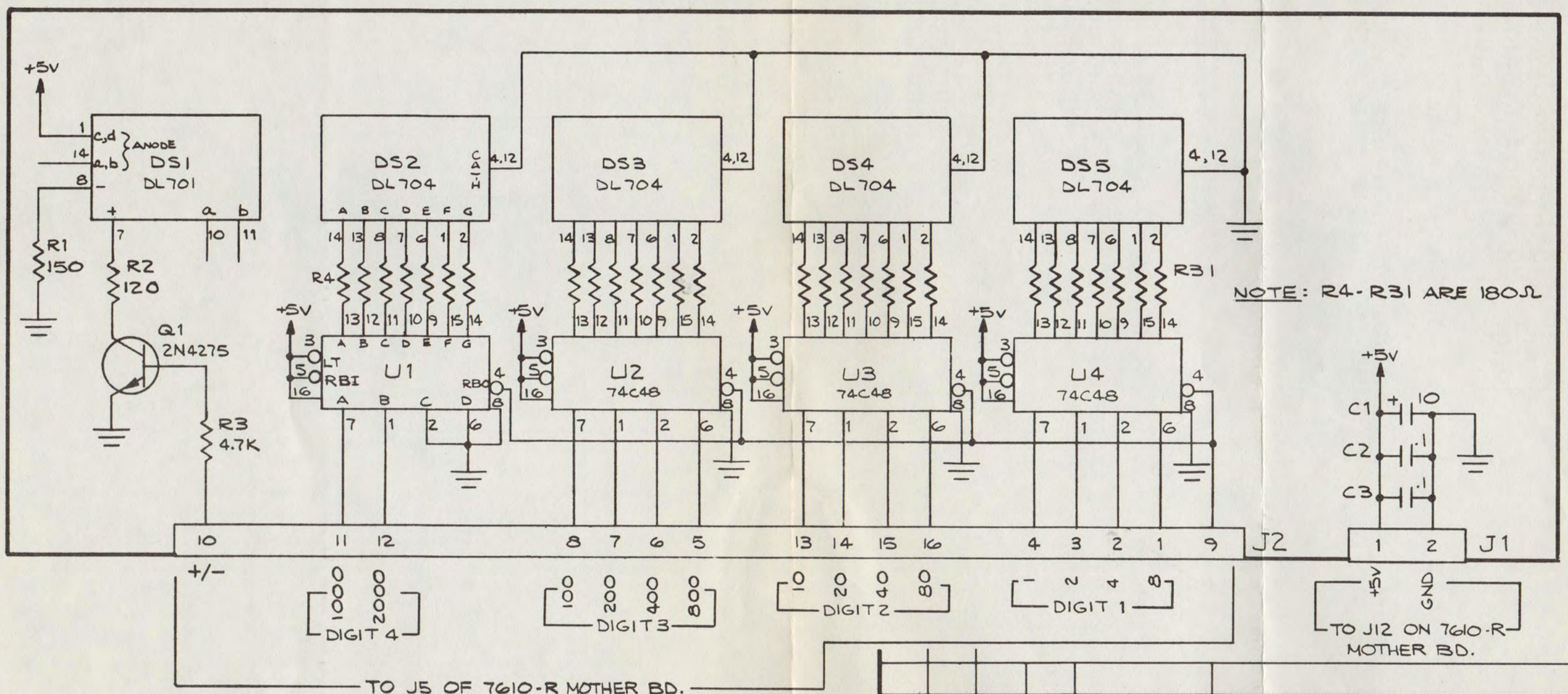

SEGMENTS DL704

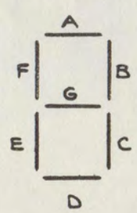

3. U1 THRU U4; PIN 16 IS +5V
PIN 8 IS GROUND.

2. CAPACITORS ARE MICRO FARADS

1. RESISTORS ARE 1/4W, 5%, COMP.

NOTES, UNLESS OTHERWISE SPECIFIED

QTY PER ASSY	ITEM NO.	EN NO.	PART NO.	DESCRIPTION	REF. DES.

LIST OF MATERIALS

REMOVE ALL BURRS AND SHARP EDGES

TOLERANCES UNLESS OTHERWISE SPECIFIED
.XX ±
.XXX ±
ANGULAR ±

DO NOT SCALE THIS PRINT

		DATE
DRAWN BY	Dan Bay	1-4-77
CHK. BY	Stan	6/14/77
PROJ. ENG.	Curt	6/17/77
MFG. ENG.		
APPD.	Curt	6/17/77
APPD.		
ECO NO.		

TFT TIME & FREQUENCY TECHNOLOGY INC.
3000 Olcott St., Santa Clara, California 95050
(408) 246-6365

TITLE FIG 6-2-4
SCHEMATIC: 7610-R
DISPLAY BD.

SIZE B | DRAWING NO. 66001-1870 | REV. A

SCALE ~ | SHT. 1 OF 1

If You Didn't Get This From My Site,
Then It Was Stolen From...
www.SteamPoweredRadio.Com

Relay BD 7610-R Assembly # 6608-1450

Ckt. Ref.	Description	TFT Stock No.
C1	Cap Tant 100MFD 4VDC	1008-0112
C2	Cap Tant 100MFD 4VDC	1008-0112
C3	Cap Tant 100MFD 4VDC	1008-0112
C4	Cap Tant 100MFD 4VDC	1008-0112
C5	Cap Tant 100MFD 4VDC	1008-0112
C6	Cap Tant 100MFD 4VDC	1008-0112
C7	Cap Tant 100MFD 4VDC	1008-0112
C8	Cap Tant 100MFD 4VDC	1008-0112
C9	Cap Tant 100MFD 4VDC	1008-0112
C10	Cap Tant 100MFD 4VDC	1008-0112
C11	Cap Tant 100MFD 4VDC	1008-0112
C12	Cap Tant 100MFD 4VDC	1008-0112
C13	Cap Tant 100MFD 4VDC	1008-0112
C14	Cap Tant 100MFD 4VDC	1008-0112
C15	Cap Tant 100MFD 4VDC	1008-0112
C16	Cap Tant 100MFD 4VDC	1008-0112
C17	Cap Tant 100MFD 4VDC	1008-0112
C18	Cap Tant 100MFD 4VDC	1008-0112
C19	Cap Tant 100MFD 4VDC	1008-0112
C20	Cap Tant 100MFD 4VDC	1008-0112
CR1	Dio Rect 1N4001	1284-4002
CR2	Dio Rect 1N4001	1284-4002
CR3	Dio Rect 1N4001	1284-4002
CR4	Dio Rect 1N4001	1284-4002
CR5	Dio Rect 1N4001	1284-4002
CR6	Dio Rect 1N4001	1284-4002
CR7	Dio Rect 1N4001	1284-4002
CR8	Dio Rect 1N4001	1284-4002
CR9	Dio Rect 1N4001	1284-4002
CR10	Dio Rect 1N4001	1284-4002
J1	Conn 26 Pin M Header	2250-6512
J2	Plug, 10 Pin	2250-6510
K1	Relay 12V 6 Pole	1880-0005
K2	Relay 12V 6 Pole	1880-0005
K3	Relay 12V 6 Pole	1880-0005
K4	Relay 12V 6 Pole	1880-0005
K5	Relay 12V 6 Pole	1880-0005
K6	Relay 12V 6 Pole	1880-0005
K7	Relay 12V 6 Pole	1880-0005
K8	Relay 12V 6 Pole	1880-0005
K9	Relay 12V 6 Pole	1880-0005
K10	Relay 12V 6 Pole	1880-0005

Relay BD 7610-R Assembly # 6608-1450

Ckt. Ref.	Description	TFT Stock No.
R1	Res Var PC MT 50K 10T	1069-5002
R2	Res Var PC MT 50K 10T	1069-5002
R3	Res Var PC MT 50K 10T	1069-5002
R4	Res Var PC MT 50K 10T	1069-5002
R5	Res Var PC MT 50K 10T	1069-5002
R6	Res Var PC MT 50K 10T	1069-5002
R7	Res Var PC MT 50K 10T	1069-5002
R8	Res Var PC MT 50K 10T	1069-5002
R9	Res Var PC MT 50K 10T	1069-5002
R10	Res Var PC MT 50K 10T	1069-5002
	PC BD 7610-R Relay	1600-1450
	Retainer Relay	2140-0025
	Socket Relay	2250-0003

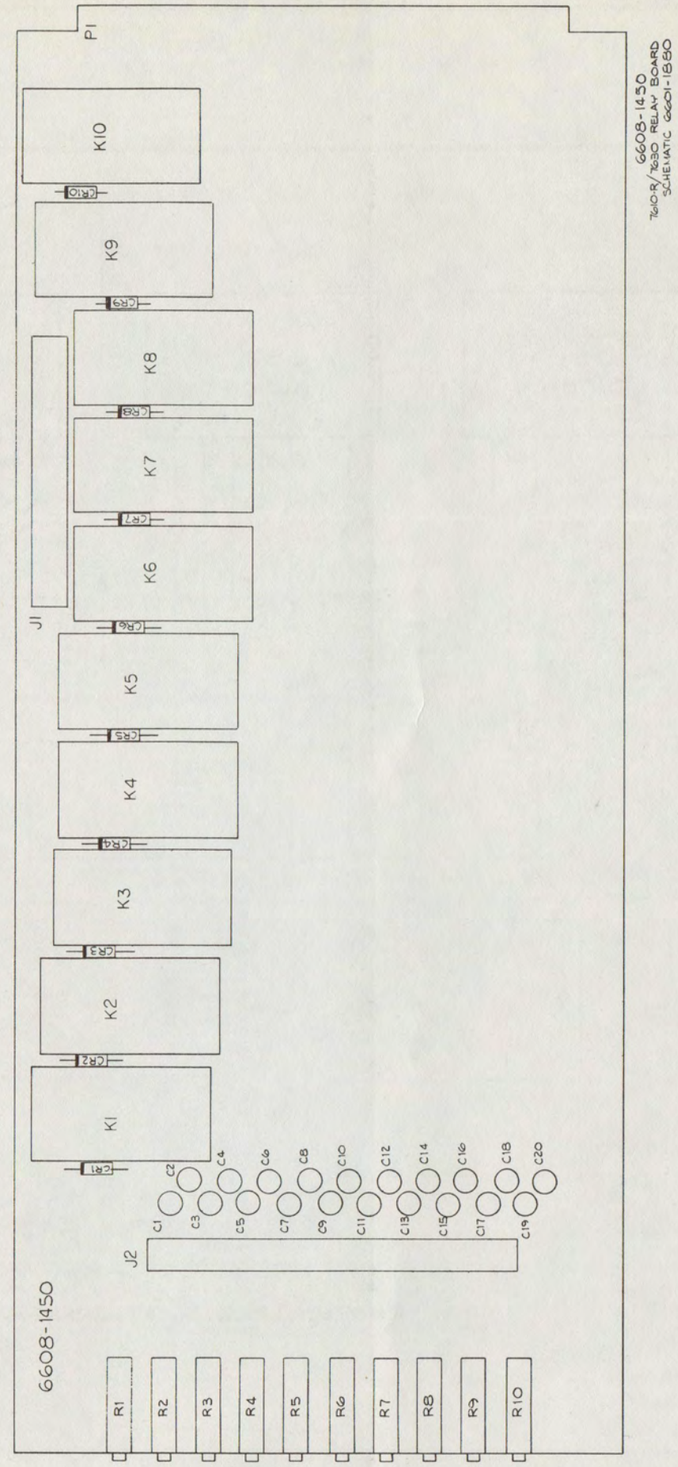

www.SteamPoweredRadio.Com

NEXT ASSY	USED ON	REVISIONS				
	7610-R/7630	SYM	DESCRIPTION	DR	CHK	AUTH	DATE
		A					

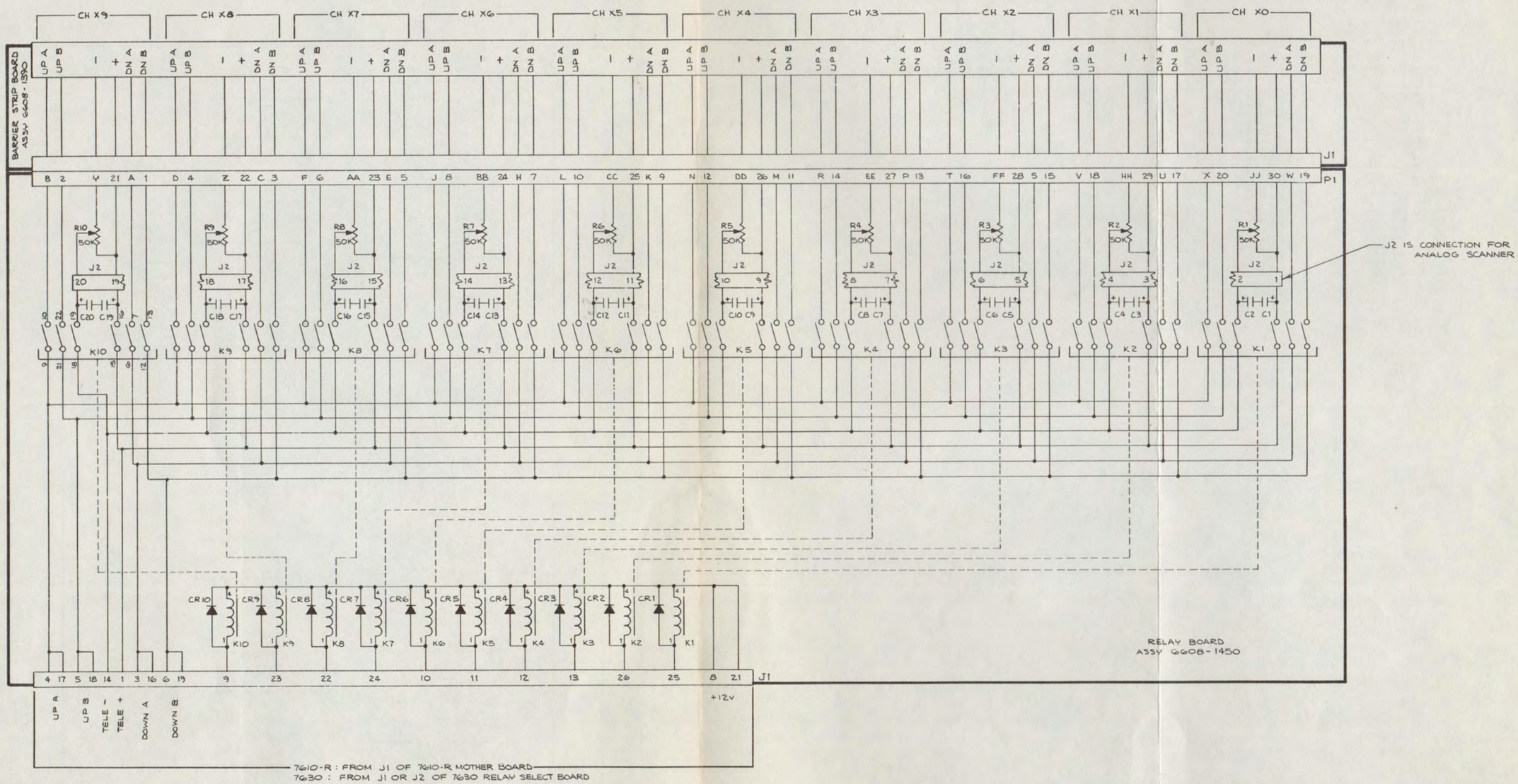

5 FOR 7630 BARRIER STRIPS CHX0 THRU CHX9 MAY BE PROGRAMMED FOR ANY CHANNEL SERIES DESIRED, e.g., CH20 THRU CH29 OR CH50 THRU CH59, UP TO CH70 THRU CH79.

4. RELAY CONTACTS SHOWN ARE NORMALLY OPEN.

3. DIODES ARE 1N4002

2. RESISTORS ARE MULIT-TURN CERMET

1. CAPACITORS ARE 100MFD, 4VDC, TANT.

NOTES, UNLESS OTHERWISE SPECIFIED;

FIG 6-2-5

QTY PER ASSY	ITEM NO.	EN NO.	PART NO.	DESCRIPTION	REF. DES.

LIST OF MATERIALS

REMOVE ALL BURRS AND SHARP EDGES

TOLERANCES UNLESS OTHERWISE SPECIFIED
.XX ± ANGULAR ±
.XXX ±

DO NOT SCALE THIS PRINT

		DATE
DRAWN BY		1-4-77
CHK. BY		6/8/72
PROJ. ENG.		6/9/72
MFG. ENG.		
APPD.		6/9/72
APPD.		
ECO NO.		

TFT TIME & FREQUENCY TECHNOLOGY INC.
3000 Olcott St., Santa Clara, California 95050
(408) 248-6365

TITLE SCHEMATIC: 7610-R/7630 RELAY & BARRIER STRIP BD.

SIZE D DRAWING NO. 6601-1880 REV. A
SCALE ~ SHT 1 OF 1

If You Didn't Get This From My Site,
Then It Was Stolen From...
www.SteamPoweredRadio.Com

BCD Interface BD Assembly # 6608-1560

Ckt. Ref.	Description	TFT Stock No.
C1	Cap Cer Disc 500pF 5%	1005-0501
C2	Cap Cer Disc 500pF 5%	1005-0501
C3	Cap Cer Disc 500pF 5%	1005-0501
C4	Cap Cer Disc 500pF 5%	1005-0501
C5	Cap Cer Disc 500pF 5%	1005-0501
C6	Cap Cer Disc 500pF 5%	1005-0501
C7	Cap Cer Disc 500pF 5%	1005-0501
C8	Cap Cer Disc 500pF 5%	1005-0501
C9	Cap Cer Disc 500pF 5%	1005-0501
C10	Cap Cer Disc 500pF 5%	1005-0501
C11	Cap Cer Disc 500pF 5%	1005-0501
C12	Cap Cer Disc 500pF 5%	1005-0501
C13	Cap Cer Disc 500pF 5%	1005-0501
C14	Cap Cer Disc 500pF 5%	1005-0501
C15	Cap Cer Disc 500pF 5%	1005-0501
C16	Cap Cer Disc 500pF 5%	1005-0501
C17	Cap Cer Disc 500pF 5%	1005-0501
C18	Cap Cer Disc 500pF 5%	1005-0501
C19	Cap Cer Disc 500pF 5%	1005-0501
C20	Cap Cer Disc 500pF 5%	1005-0501
C21	Cap Cer Disc 500pF 5%	1005-0501
C22	Cap Cer Disc 500pF 5%	1005-0501
C23	Cap Cer Disc 500pF 5%	1005-0501
C24	Cap Cer Disc 500pF 5%	1005-0501
C25	Cap Cer Disc 500pF 5%	1005-0501
C26	Cap Cer Disc 500pF 5%	1005-0501
C27	Cap Cer Disc 500pF 5%	1005-0501
C28	Cap Cer Disc 500pF 5%	1005-0501
C29	Cap Cer Disc 500pF 5%	1005-0501
C30	Cap Cer Disc 500pF 5%	1005-0501
C31	Cap Cer Disc .05MFD	1005-5039
C32	Cap Cer Disc .05MFD	1005-5039
C33	Cap Cer Disc .05MFD	1005-5039
C34	Cap Tan 10MFD 20V 10%	1008-0100
R1	Res Car Comp 1/4W 5% 470K	1065-4703
U1	Res Network 1.2K	1073-1201
U2	Res Network 1.2K	1073-1201
U3	I/C Natl MM80C97N	1102-8097
U4	I/C Natl MM80C97N	1102-8097
U5	I/C Natl MM80C97N	1102-8097
U6	I/C Natl MM80C97N	1102-8097
U7	I/C Natl MM80C97N	1102-8097

BCD Interface BD Assembly # 6608-1560

Ckt. Ref.	Description	TFT Stock No.
U8	I/C MM74C02N	1102-7402
U9	I/C Natl MM80C97N	1102-8097
	P.C. BD BCD Interface	1600-1560
	Socket, I/C 14 Pin	2250-1012
	Socket, I/C 16 Pin	2250-1016
	Socket, 6 Pin Locking PC MT	2250-5206
	Conn 26 Pin M Header	2250-6512

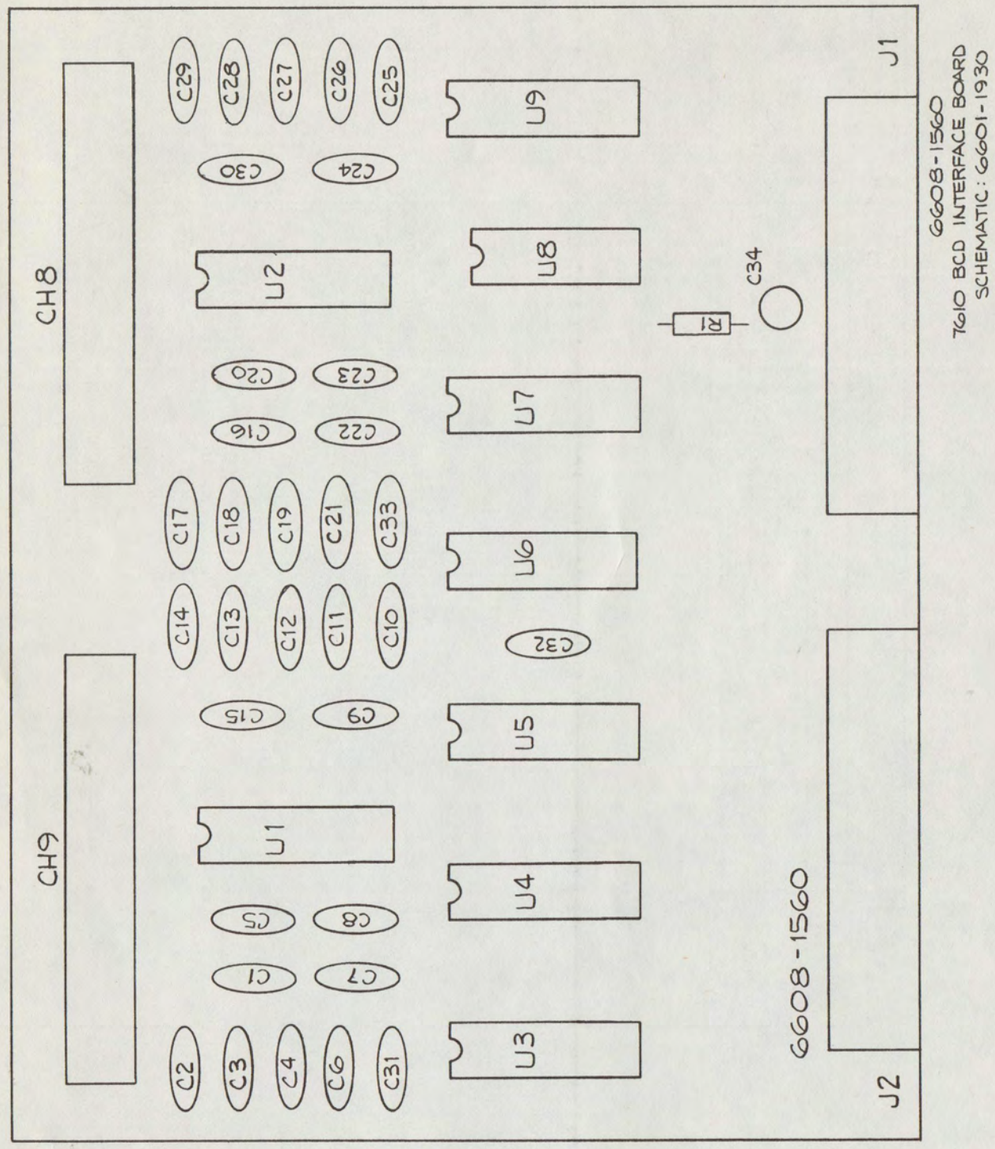

www.SteamPoweredRadio.Com

NEXT ASSY	USED ON
	7610

REVISIONS

SYM	DESCRIPTION	DR	CHK	AUTH	DATE

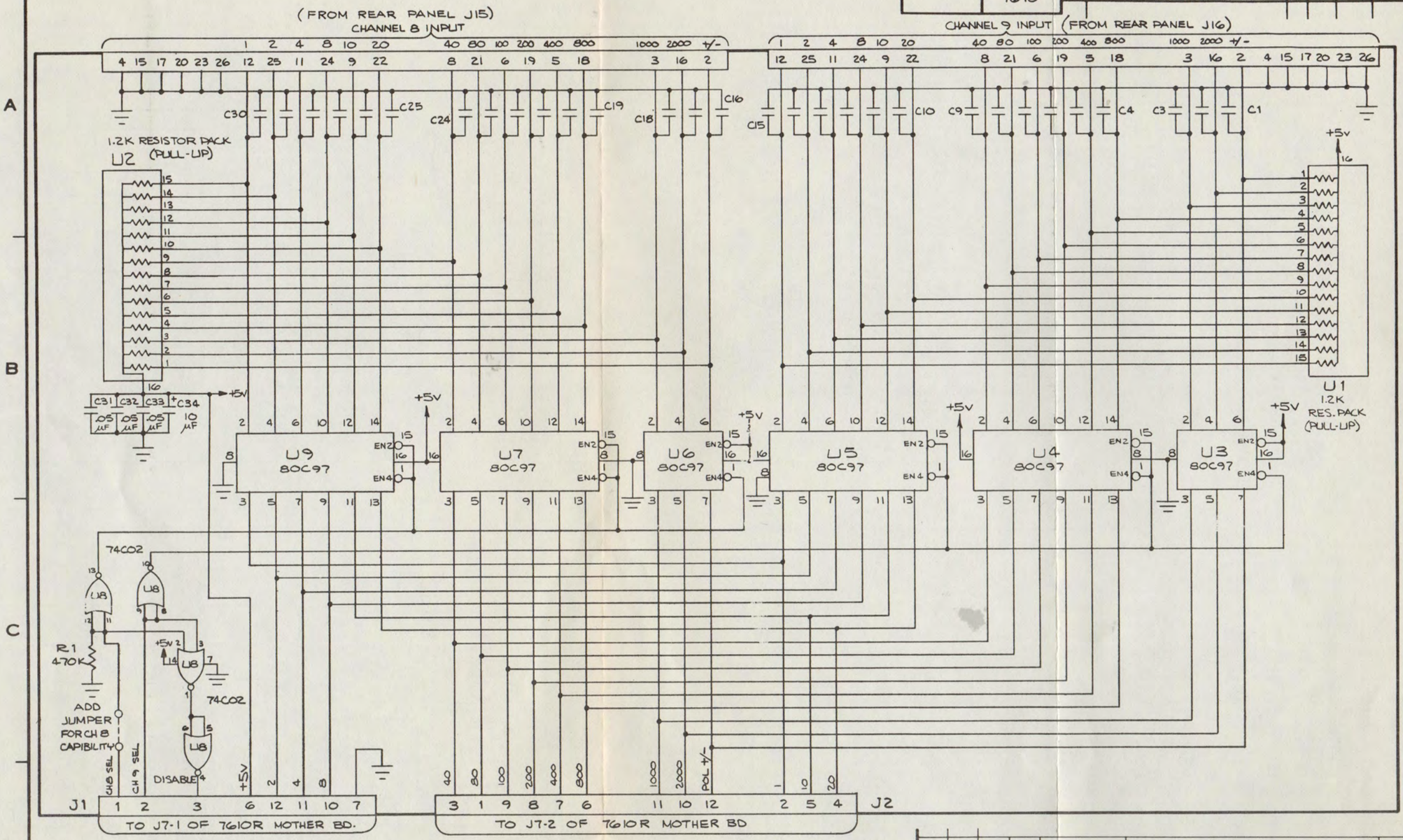

QTY PER ASSY	ITEM NO.	EN NO.	PART NO.	DESCRIPTION	REF. DES.

LIST OF MATERIALS

REMOVE ALL BURRS AND SHARP EDGES

TOLERANCES UNLESS OTHERWISE SPECIFIED
.XX ± ~ ANGULAR ±
.XXX ± ~

DO NOT SCALE THIS PRINT

		DATE
DRAWN BY	Don Bang	1-13-77
CHK. BY	Jim	6/4/77
PROJ. ENG.	CWE	6/7/77
MFG. ENG.		
APPD.	CWE	6/7/77
APPD.		
ECO NO.		

TFT TIME & FREQUENCY TECHNOLOGY INC.
3000 Olcott St., Santa Clara, California 95050
(408) 246-6365

TITLE FIG.6-2-6
BCD INTERFACE BD.
MODEL 7610

SIZE C | DRAWING NO. 6601-1930 | REV. A
SCALE ~ | SHT. 1 OF 1

DWG. NO.

1. CAPACITORS ARE 470pF

NOTES, UNLESS OTHERWISE SPECIFIED;

If You Didn't Get This From My Site,
Then It Was Stolen From...
www.SteamPoweredRadio.Com

Model 7610-R FSK Modem BD Assembly # 6608-1600

Ckt. Ref.	Description	TFT Stock No.
C1	Cap Poly Carb .042MFD 50V	1006-0420
C2	Cap Poly Carb .11MFD 100V	1006-0110
C3	Cap Tan 10MFD 20V 10%	1008-0100
C4	Cap Poly Carb .022MFD 50V	1006-0220
C5	Cap Poly Carb .01MFD 2% 50V	1006-0001
C6	Cap Poly Carb .1MFD 50V	1006-0101
C7	Cap Poly Carb .1MFD 50V	1006-0101
C8	Cap Poly Carb .1MFD 50V	1006-0101
C9	Cap Poly Carb .1MFD 50V	1006-0101
C10	Cap Tan 10MFD 20V 10%	1008-0100
C11	Cap Cer Disc .1UF 12V	1005-0100
C12	Cap Cer Disc .05MFD	1005-5039
C13	Cap Poly Carb .11MFD 100V	1006-0110
C14	Cap Cer Disc .2MFD	1005-2029
C15	Cap Poly .027MFD 100V	1002-0271
C16	Cap Cer Disc .02MFD	1005-2039
C39	Cap Poly Carb .1MFD 50V	1006-0101
C40	Cap Poly Carb .1MFD 50V	1006-0101
C41	Cap Poly Carb .1MFD 50V	1006-0101
C42	Cap Poly Carb .1MFD 50V	1006-0101
C47	Cap Cer Disc .1UF 12V	1005-0100
C48	Cap Cer Disc .05MFD	1005-5039
C49	Cap Cer Disc .05MFD	1005-5039
C50	Cap Cer Disc .05MFD	1005-5039
C51	Cap Cer Disc .05MFD	1005-5039
C52	Cap Tan 10MFD 20V 10%	1008-0100
C53	Cap Mica 1000pF	1001-0102
C54	Cap Poly Carb .1MFD 50V	1006-0101
C55	Cap Poly Carb 0012 27	1006-0012
C56	Cap Poly Carb .1MFD 50V	1006-0101
C57	Cap Poly Carb .1MFD 50V	1006-0101
C58	Cap Poly Carb .1MFD 50V	1006-0101
C59	Cap Tan 10MFD 20V 10%	1008-0100
C60	Cap Tan 10MFD 20V 10%	1008-0100
CR1	Dio 1N3064	1281-3064
CR2	Dio 1N3064	1281-3064
CR3	Dio 1N3064	1281-3064
CR4	Dio 1N3064	1281-3064
CR5	Diode 1N281	1280-0281
Q1	Xistor 2N4275	1271-4275
R1	Res Car Comp 1/4W 5% 4.7K	1065-4701
R2	Res MT FLM 1/8W 1% 6.34K	1061-6341

Model 7610-R FSK Modem BD Assembly # 6608-1600

Ckt. Ref.	Description	TFT Stock No.
R3	Pot PC MT 500 OHM 1T	1072-0500
R4	Res Car Comp 1/4W 5% 100K	1065-1003
R5	Res MT FLM 1/8W 1% 41.2K	1061-4122
R6	Res MT FLM 1/8W 1% 41.2K	1061-4122
R7	Res MT FLM 1/8W 1% 41.2K	1061-4122
R13	Res Car Comp 1/4W 5% 7.5K	1065-7501
R14	Res MT FLM 1/8W 1% 1.37K	1061-1370
R15	Pot PC MT 500 OHM 1T	1072-0500
R16	Res Car Comp 1/4W 5% 910	1065-0910
R17	Res MT FLM 1/8W 1% 40.2	1061-4022
R18	Pot PC MT 500 OHM 1T	1072-0500
R19	Res Car Comp 1/4W 5% 24K	1065-2402
R20	Res Car Comp 1/4W 5% 10K	1065-1002
R21	Res MT FLM 1/8W 1% 332	1061-0332
R22	Pot PC MT 500 OHM 1T	1072-0500
R23	Res Car Comp 1/4W 5% 910	1065-0910
R24	Pot PC MT 500 OHM 1T	1072-0500
R25	Res Car Comp 1/4W 5% 24K	1065-2402
R26	Res Car Comp 1/4W 5% 10K	1065-1002
R27	Res MT FLM 1/8W 1% 1.21K	1061-1211
R28	Pot PC MT 500 OHM 1T	1072-0500
R29	Res Car Comp 1/4W 5% 910	1065-0910
R30	Pot PC MT 500 OHM 1T	1072-0500
R31	Res Car Comp 1/4W 5% 24K	1065-2402
R32	Res Car Comp 1/4W 5% 7.5K	1065-7501
R33	Res MT FLM 1/8W 1% 750	1061-0750
R34	Pot PC MT 500 OHM 1T	1072-0500
R35	Res Car Comp 1/4W 5% 910	1065-0910
R36	Pot PC MT 500 OHM 1T	1072-0500
R37	Res MT FLM 1/8W 1% 20.5K	1061-2052
R38	Res MT. FLM 1/8W 1% 24.3K	1061-2432
R39	Res MT FLM 1/8W 1% 18.2	1061-1822
R40	Res Car Comp 1/4W 5% 24K	1065-2402
R41	Res Car Comp 1/4W 5% 1K	1065-1001
R42	Res Car Comp 1/4W 5% 22K	1065-2202
R43	Res MT FLM 1/8W 1% 12.4K	1061-1242
R46	Res Car Comp 1/4W 5% 3.3K	1065-3301
R47	Res Car Comp 1/4W 5% 5.1K	1065-5101
R48	Res Car Comp 1/4W 5% 470K	1065-4703
R49	Res Car Comp 1/4W 5% 100K	1065-1003
R50	Res MTL FLM 1/8W 1% 6.19K	1061-6192
R51	Res MT FLM 1/8W 1% 25.5K	1061-2552

Model 7610-R FSK Modem BD Assembly # 6608-1600

Ckt. Ref.	Description	TFT Stock No.
R53	Res Car Comp 1/4W 5% 560K	1065-5603
R54	Pot PC MT 5K 1T	1072-5001
R55	Res MT FLM 1/8W 1% 12.4K	1061-1242
R56	Res MT FLM 1/8W 1% 1.18	1061-1181
R57	Res MT FLM 1/8W 1% 29.4K	1061-2942
R58	Res MT FLM 1/8W 1% 237	1061-0237
R59	Res Car Comp 1/4W 5% 1K	1065-1001
R60	Res Car Comp 1/4W 5% 100K	1065-1003
U1	I/C LM567CN	1100-0567
U2	I/C LM1458N	1101-1458
U3	I/C LM741CN	1100-0741
U4	I/C LM741CN	1100-0741
U5	I/C LM741CN	1100-0741
U6	I/C LM741CN	1100-0741
U7	I/C LM1458N	1101-1458
U8	I/C XR-221CP	1100-2211
U9	I/C LM741CN	1100-0741
	Socket, I/C 8 Pin	2250-1008
	Socket, I/C 14 Pin	2250-1014
	Socket, 12 Pin RT/A Molex	2250-5212
	PC BD 7610 Modem	1600-1600REVA

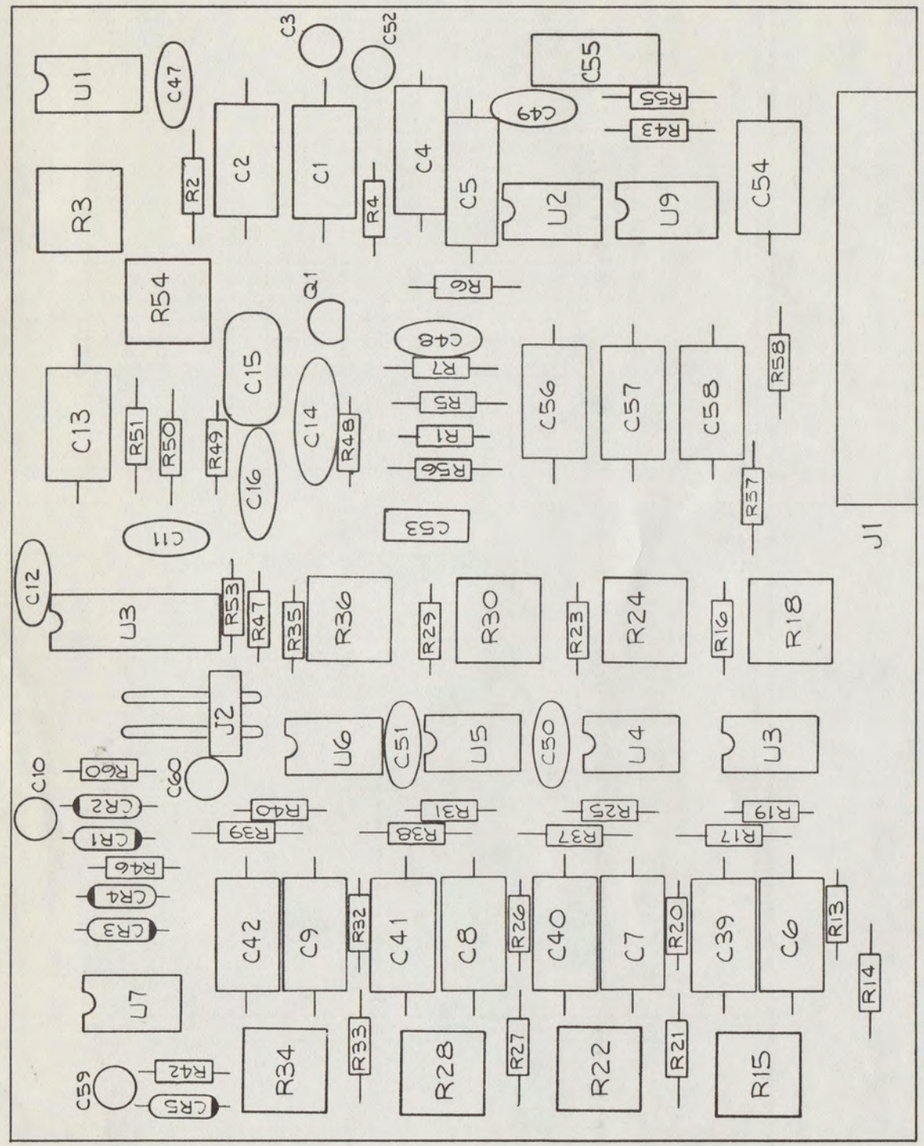

6608-1600
7610-R FSK MODEM BOARD
SCHEMATIC 6601-1960

www.SteamPoweredRadio.Com

NEXT ASSY	USED ON
	7610-R

REVISIONS

SYM	DESCRIPTION	DR	CHK	AUTH	DATE
A	REL TO PROD.	TD			
B	REVISED PER ECO	TD	KRC	366	4-26-77

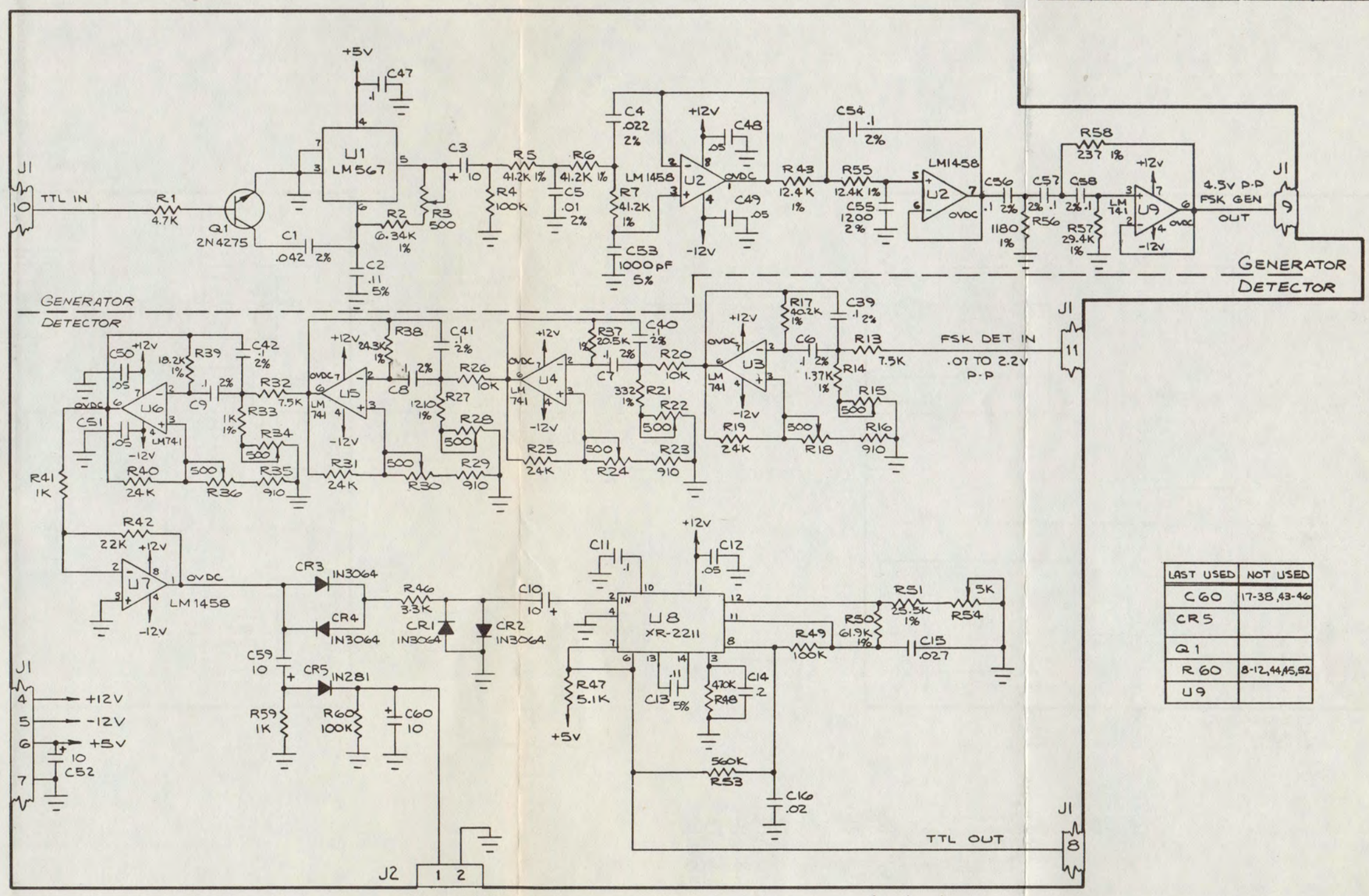

LAST USED	NOT USED
C60	17-38, 43-46
CR5	
Q1	
R60	8-12, 44, 45, 52
U9	

3. J1 CONNECTS TO J8 OF 7610R MOTHER BD
2. CAPACITOR VALUES ARE IN MICRO FARADS
1. RESISTOR VALUES ARE IN OHMS, 1/4W, 5%

NOTES, UNLESS OTHERWISE SPECIFIED;

QTY PER ASSY	ITEM NO.	EN NO.	PART NO.	DESCRIPTION	REF. DES.

LIST OF MATERIALS

REMOVE ALL BURRS AND SHARP EDGES

TOLERANCES UNLESS OTHERWISE SPECIFIED
.XX ± ~ ANGULAR
.XXX ± ~ ±

DO NOT SCALE THIS PRINT

		DATE
DRAWN BY	Dan Bay	1-12-77
CHK. BY	J. Tau	6/14/77
PROJ. ENG.	K. Cangle	4-27-77
MFG. ENG.		
APPD.	CWE	6/17/77
APPD.		
ECO NO.		

TFT TIME & FREQUENCY TECHNOLOGY INC.
3000 Olcott St., Santa Clara, California 95050
(408) 246-6365

TITLE FIG 6-2-7 SCHEMATIC 7610-R FSK MODEM

SIZE C DRAWING NO. 6601-1960 REV. B

SCALE ~ SHT. 1 OF 1

DWG. NO.

If You Didn't Get This From My Site,
Then It Was Stolen From...
www.SteamPoweredRadio.Com

NEXT ASSY	USED ON
5004-7610	7610

REVISIONS

SYM	DESCRIPTION	DR	CHK	AUTH	DATE
A	REL TO PRODUCTION	TD		358	3-4-77
B	REVISED PER ECO	TD	KRC	366	4-26-77

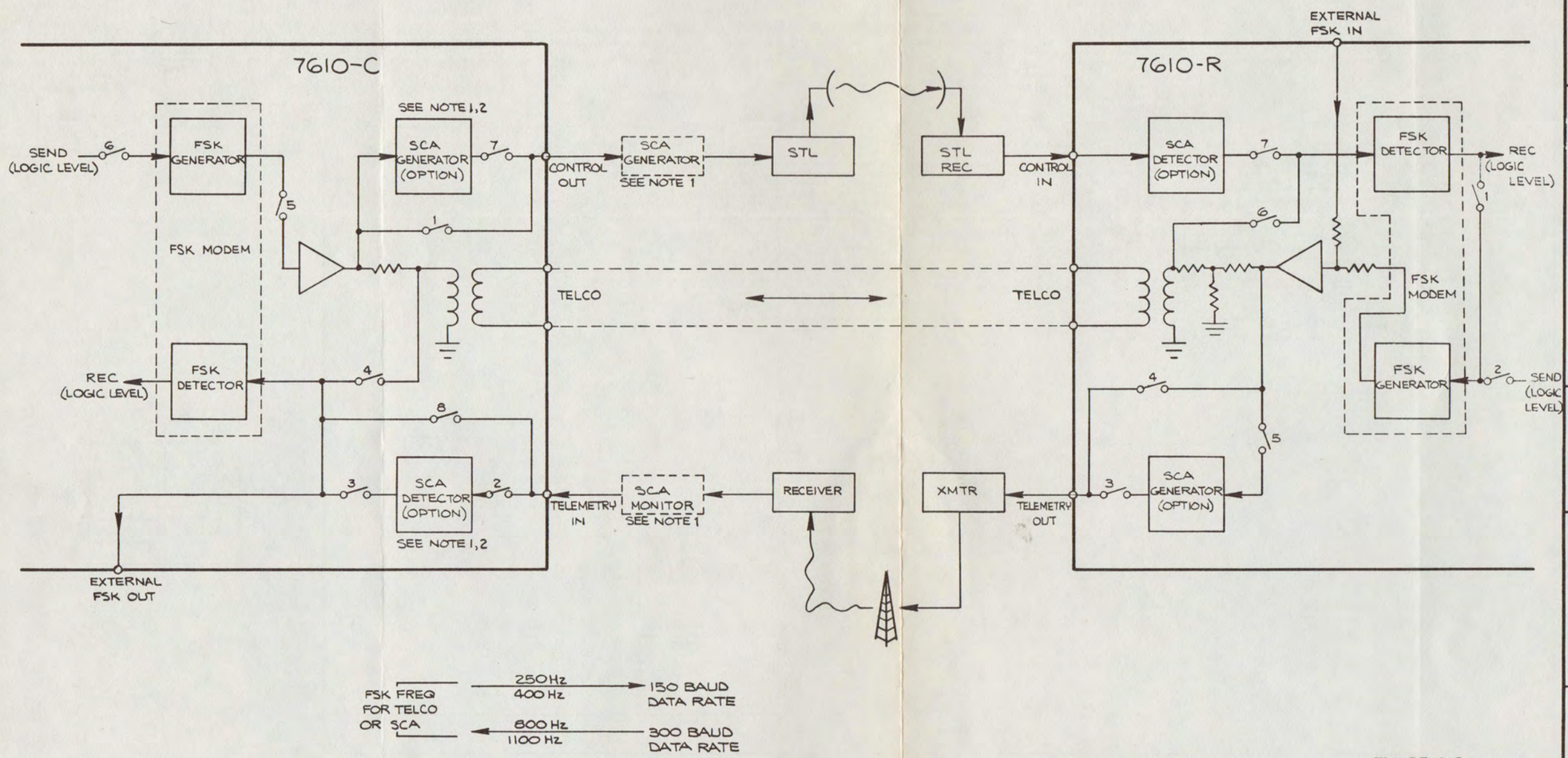

FIGURE 6.3

2. SCA GENERATOR AND DETECTOR ARE ON ONE CARD

1. IF THE STUDIO HAS AN SCA GENERATOR OR SCA MONITOR, THE 7610 GENERATOR AND/OR SCA DETECTOR MAY BE ELIMINATED. THE RESPECTIVE BYPASS SWITCH WOULD THEN BE CLOSED.

NOTES, UNLESS OTHERWISE SPECIFIED;

QTY PER ASSY	ITEM NO.	EN NO.	PART NO.	DESCRIPTION	REF. DES.

LIST OF MATERIALS

REMOVE ALL BURRS AND SHARP EDGES

TOLERANCES UNLESS OTHERWISE SPECIFIED
.XX ±
.XXX ±
ANGULAR ±

DO NOT SCALE THIS PRINT

		DATE
DRAWN BY	Dan Bay	3-4-77
CHK. BY	Jim	6/4/77
PROJ. ENG.	K. Cragle	3-27-77
MFG. ENG.		
APPD.	Carl E	4/17/77
APPD.		
ECO NO.		

TFT TIME & FREQUENCY TECHNOLOGY INC.
3000 Olcott St., Santa Clara, California 95050
(408) 246-6365

TITLE BLOCK DIAGRAM COMMUNICATION OPTIONS MODEL 7610

SIZE C | DRAWING NO. 6600-1240 | REV. B

SCALE ~ | SHT. 1 OF 1

DWG. NO.

www.SteamPoweredRadio.Com

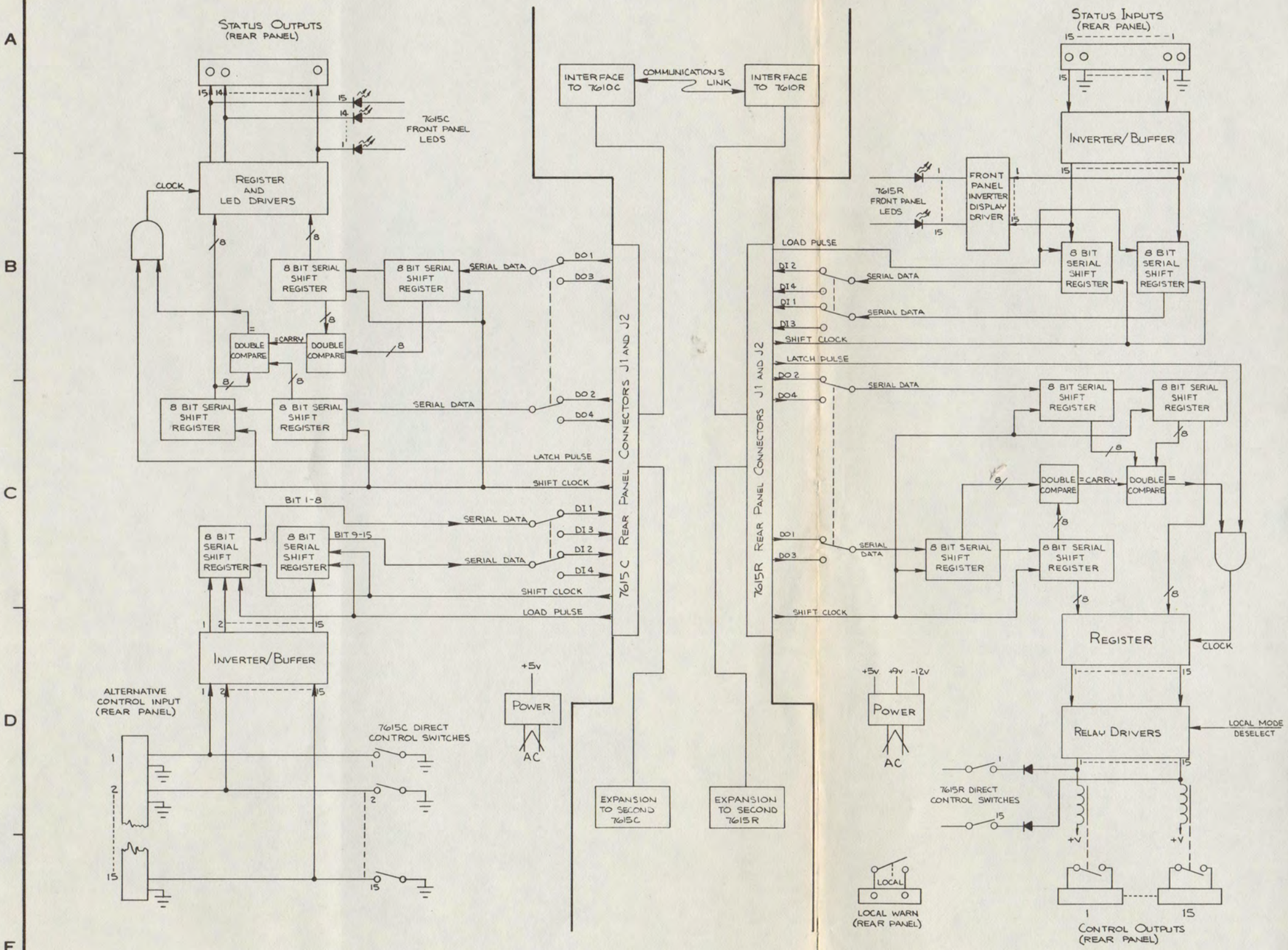

NEXT ASSY	USED ON	REVISIONS				
		SYM	DESCRIPTION	DR	CHK	AUTH	DATE

QTY PER ASSY	ITEM NO.	EN NO.	PART NO.	DESCRIPTION	REF. DES.

LIST OF MATERIALS

REMOVE ALL BURRS AND SHARP EDGES

TOLERANCES UNLESS OTHERWISE SPECIFIED .XX ± .XXX ± ANGULAR ± ~

DO NOT SCALE THIS PRINT

		DATE
DRAWN BY	Don Bass	5-5-77
CHK. BY		4/14/77
PROJ. ENG.		4/18/77
MFG. ENG.		
APPD.		
APPD.		
ECO NO.		

TFT TIME & FREQUENCY TECHNOLOGY INC.
3000 Olcott St., Santa Clara, California 95050
(408) 246-8365

TITLE FIGURE 6-4-1 BLOCK DIAGRAM MODEL 7615

SIZE D DRAWING NO. 6600-1390 REV. A

SCALE ~ SHT. 1 OF 1

If You Didn't Get This From My Site,
Then It Was Stolen From...
www.SteamPoweredRadio.com

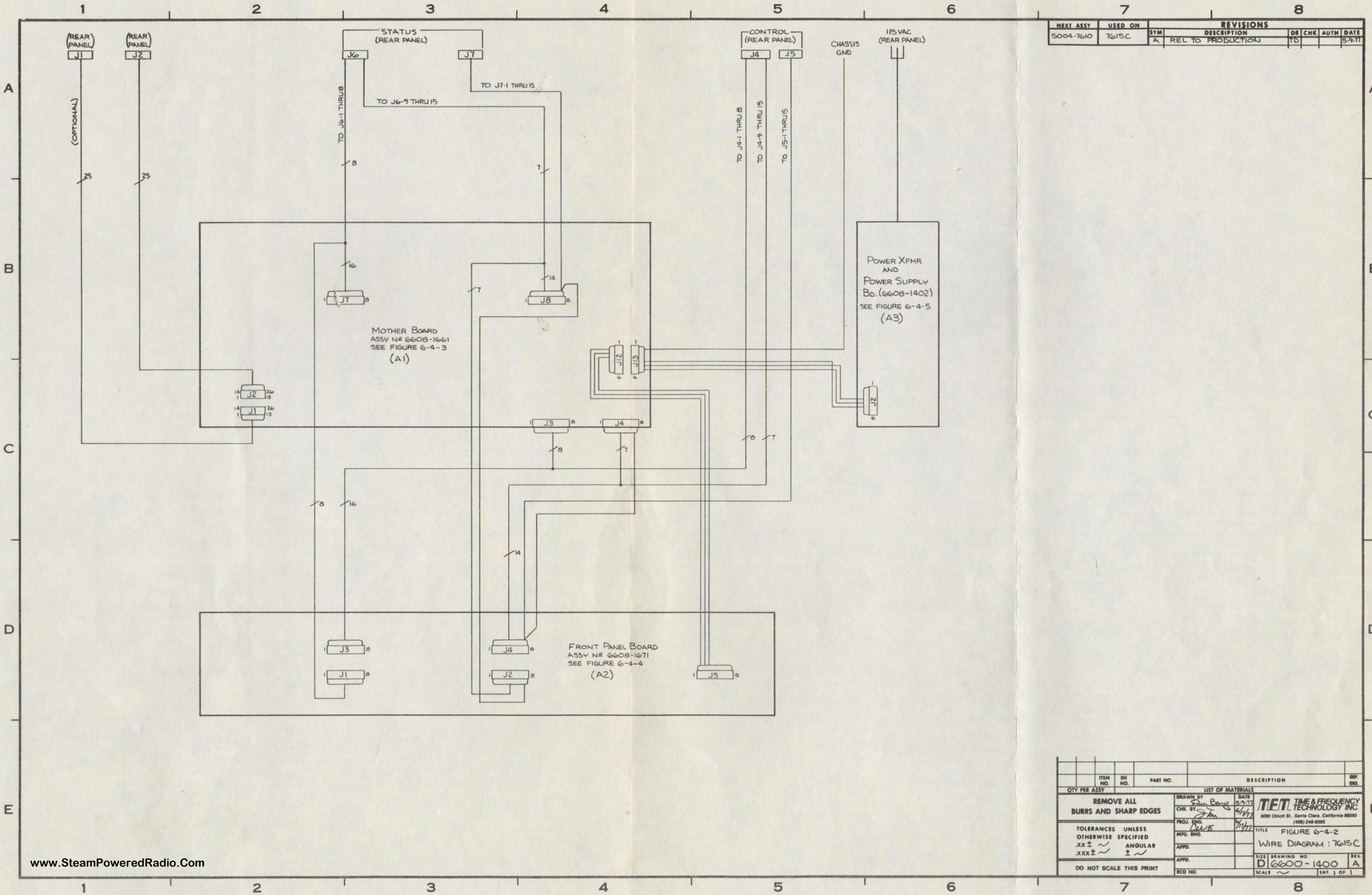

NEXT ASSY	USED ON
5004-7610	7615C

REVISIONS

SYM	DESCRIPTION	DR	CHK	AUTH	DATE
A	REL TO PRODUCTION	TD			5-9-77

QTY PER ASSY	ITEM NO.	EN NO.	PART NO.	DESCRIPTION	REF. DES.

LIST OF MATERIALS

REMOVE ALL BURRS AND SHARP EDGES

TOLERANCES UNLESS OTHERWISE SPECIFIED
.XX ± ~ ANGULAR
.XXX ± ~ ± ~

DO NOT SCALE THIS PRINT

DRAWN BY Ron Bary DATE 5-9-77
CHK. BY [signature] 6/7/77
PROJ. ENG. CWE 6/7/77
MFG. ENG.
APPD.
APPD.
ECO NO.

TFT TIME & FREQUENCY TECHNOLOGY INC.
3000 Olcott St., Santa Clara, California 95050
(408) 246-6365

TITLE FIGURE 6-4-2
WIRE DIAGRAM : 7615C

SIZE D DRAWING NO. 6600-1400 REV. A
SCALE ~ SHT. 1 OF 1

DWG. NO.

www.SteamPoweredRadio.Com

Mother BD 7615-C Assembly # 6608-1661

Ckt. Ref.	Description	TFT Stock No.
C35	Cap Cer Disc 500pF 5%	1005-0501
C36	Cap Cer Disc 120pF 5%	1005-0121
C37	Cap Cer Disc 500pF 5%	1005-0501
C38	Cap Cer Disc 120pF 5%	1005-0121
C39	Cap Cer Disc 120pF 5%	1005-0121
C40	Cap Cer Disc 120pF 5%	1005-0121
C41	Cap Cer Disc .1UF 12V	1005-0100
C42	Cap Cer Disc .1UF 12V	1005-0100
C43	Cap Cer Disc .1UF 12V	1005-0100
C44	Cap Cer Disc .1UF 12V	1005-0100
C45	Cap Cer Disc .1UF 12V	1005-0100
C46	Cap Cer Disc .1UF 12V	1005-0100
C47	Cap Cer Disc .1UF 12V	1005-0100
C48	Cap Cer Disc .1UF 12V	1005-0100
C49	Cap Cer Disc .1UF 12V	1005-0100
C50	Cap Cer Disc .1UF 12V	1005-0100
C51	Cap Cer Disc .1UF 12V	1005-0100
C52	Cap Cer Disc .1UF 12V	1005-0100
C53	Cap Cer Disc .1UF 12V	1005-0100
C54	Cap Cer Disc .1UF 12V	1005-0100
C55	Cap Cer Disc .1UF 12V	1005-0100
C56	Cap Cer Disc .1UF 12V	1005-0100
C57	Cap Cer Disc .1UF 12V	1005-0100
C58	Cap Cer Disc .1UF 12V	1005-0100
C59	Cap Cer Disc .1UF 12V	1005-0100
C60	Cap Tan 10MFD 20V 10%	1008-0100
C61	Cap Tan 10MFD 20V 10%	1008-0100
CR47	Dio 1N3064	1281-3064
Q1	Xistor 2N4275	1271-4275
Q2	Xistor 2N4275	1271-4275
Q3	Xistor 2N4275	1271-4275
Q4	Xistor 2N4275	1271-4275
Q5	Xistor 2N4275	1271-4275
Q6	Xistor 2N4275	1271-4275
Q7	Xistor 2N4275	1271-4275
Q8	Xistor 2N4275	1271-4275
Q9	Xistor 2N4275	1271-4275
Q10	Xistor 2N4275	1271-4275
Q11	Xistor 2N4275	1271-4275
Q12	Xistor 2N4275	1271-4275
Q13	Xistor 2N4275	1271-4275
Q14	Xistor 2N4275	1271-4275

Mother BD 7615-C Assembly # 6608-1661

Ckt. Ref.	Description	TFT Stock No.
Q15	Xistor 2N4275	1271-4275
R1	Res Car Comp 1/4W 5% 4.7K	1065-4701
R2	Res Car Comp 1/4W 5% 4.7K	1065-4701
R3	Res Car Comp 1/4W 5% 4.7K	1065-4701
R4	Res Car Comp 1/4W 5% 4.7K	1065-4701
R5	Res Car Comp 1/4W 5% 4.7K	1065-4701
R6	Res Car Comp 1/4W 5% 4.7K	1065-4701
R7	Res Car Comp 1/4W 5% 4.7K	1065-4701
R8	Res Car Comp 1/4W 5% 4.7K	1065-4701
R9	Res Car Comp 1/4W 5% 4.7K	1065-4701
R10	Res Car Comp 1/4W 5% 4.7K	1065-4701
R11	Res Car Comp 1/4W 5% 4.7K	1065-4701
R12	Res Car Comp 1/4W 5% 4.7K	1065-4701
R13	Res Car Comp 1/4W 5% 4.7K	1065-4701
R14	Res Car Comp 1/4W 5% 4.7K	1065-4701
R15	Res Car Comp 1/4W 5% 4.7K	1065-4701
R18	Res Car Comp 1/4W 5% 1.2K	1065-1201
R19	Res Car Comp 1/4W 5% 4.7K	1065-4701
R20	Res Car Comp 1/4W 5% 2.4K	1065-2401
R21	Res Car Comp 1/4W 5% 4.7K	1065-4701
R22	Res Car Comp 1/4W 5% 1.2K	1065-1201
R23	Res Car Comp 1/4W 5% 4.7K	1065-4701
R24	Res Car Comp 1/4W 5% 2.4K	1065-2401
R25	Res Car Comp 1/4W 5% 4.7K	1065-4701
R27	Res Car Comp 1/4W 5% 4.7K	1065-4701
R28	Res Car Comp 1/4W 5% 2.4K	1065-2401
R29	Res Car Comp 1/4W 5% 4.7K	1065-4701
R30	Res Car Comp 1/4W 5% 4.7K	1065-4701
R31	Res Car Comp 1/4W 5% 2.2K	1065-2201
R32	Res Car Comp 1/4W 5% 2.2K	1065-2201
R33	Res Car Comp 1/4W 5% 2.2K	1065-2201
R34	Res Car Comp 1/4W 5% 2.2K	1065-2201
R35	Res Car Comp 1/4W 5% 2.2K	1065-2201
R36	Res Car Comp 1/4W 5% 2.2K	1065-2201
R37	Res Car Comp 1/4W 5% 2.2K	1065-2201
R38	Res Car Comp 1/4W 5% 2.2K	1065-2201
R39	Res Car Comp 1/4W 5% 2.2K	1065-2201
R40	Res Car Comp 1/4W 5% 2.2K	1065-2201
R41	Res Car Comp 1/4W 5% 2.2K	1065-2201
R42	Res Car Comp 1/4W 5% 2.2K	1065-2201
R43	Res Car Comp 1/4W 5% 2.2K	1065-2201
R44	Res Car Comp 1/4W 5% 2.2K	1065-2201

Mother BD 7615-C Assembly # 6608-1661

Ckt. Ref.	Description	TFT Stock No.
R45	Res Car Comp 1/4W 5% 2.2K	1065-2201
R46	Res Car Comp 1/4W 5% 10.	1065-0010
R47	Res Car Comp 1/4W 5% 10.	1065-0010
R48	Res Car Comp 1/4W 5% 10.	1065-0010
R49	Res Car Comp 1/4W 5% 10.	1065-0010
R51	Res Car Comp 1/4W 5% 10.	1065-0010
R52	Res Car Comp 1/4W 5% 10.	1065-0010
R53	Res Car Comp 1/4W 5% 10.	1065-0010
R54	Res Car Comp 1/4W 5% 10.	1065-0010
R55	Res Car Comp 1/4W 5% 10.	1065-0010
R56	Res Car Comp 1/4W 5% 10.	1065-0010
R57	Res Car Comp 1/4W 5% 10.	1065-0010
R58	Res Car Comp 1/4W 5% 10.	1065-0010
R59	Res Car Comp 1/4W 5% 10.	1065-0010
R60	Res Car Comp 1/4W 5% 10.	1065-0010
S1	Switch Slide 4 Pot	1840-2240
U1	I/C SN74LS04N	1101-7404
U2	I/C SN74LS04N	1101-7404
U3	I/C MM74C164	1102-0164
U4	I/C MM74C08N	1102-7408
U5	I/C MM74C164	1102-0164
U6	I/C MM74C164	1102-0164
U7	I/C MM74C85N	1102-7485
U8	I/C MM74C85N	1102-7485
U9	I/C MM74C164	1102-0164
U10	I/C MM74C85N	1102-7485
U11	I/C MM74C85N	1102-7485
U12	I/C MM74C174N	1102-0174
U13	I/C MM74C174N	1102-0174
U14	I/C MM74C174N	1102-0174
U15	I/C SN74LS04N	1101-7404
U16	I/C SN74LS04N	1101-7404
U17	I/C SN74LS04N	1101-7404
U18	I/C MM74C165	1102-0165
U19	I/C MM74C165	1102-0165
	Socket, I/C 14 Pin	2250-1014
	Socket, I/C 16 Pin	2250-1016
	Plug, 6 Pin	2250-6006
	Conn 8 Pin Molex	2250-6008
	Conn 26 Pin M Header	2250-6512
	PC BD 7615 Mother	1600-1660REVA

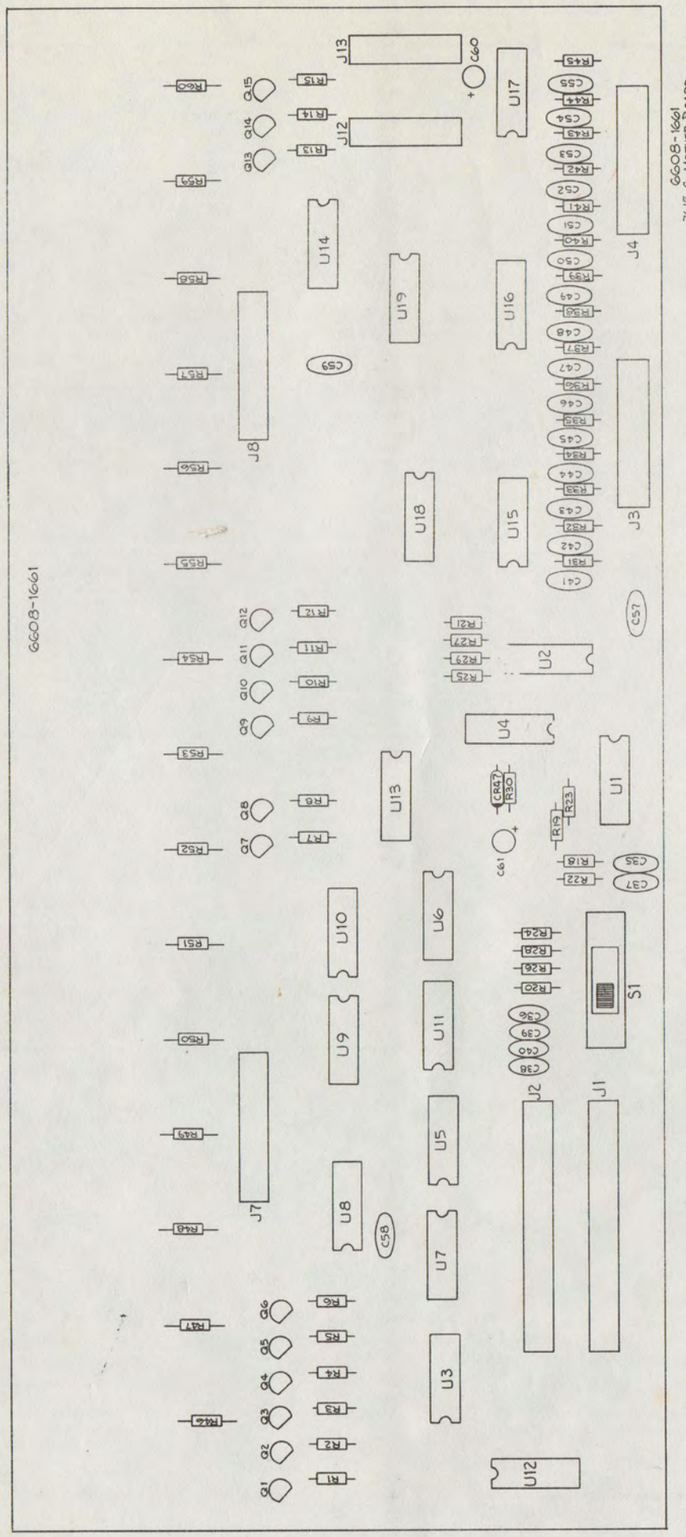

www.SteamPoweredRadio.Com

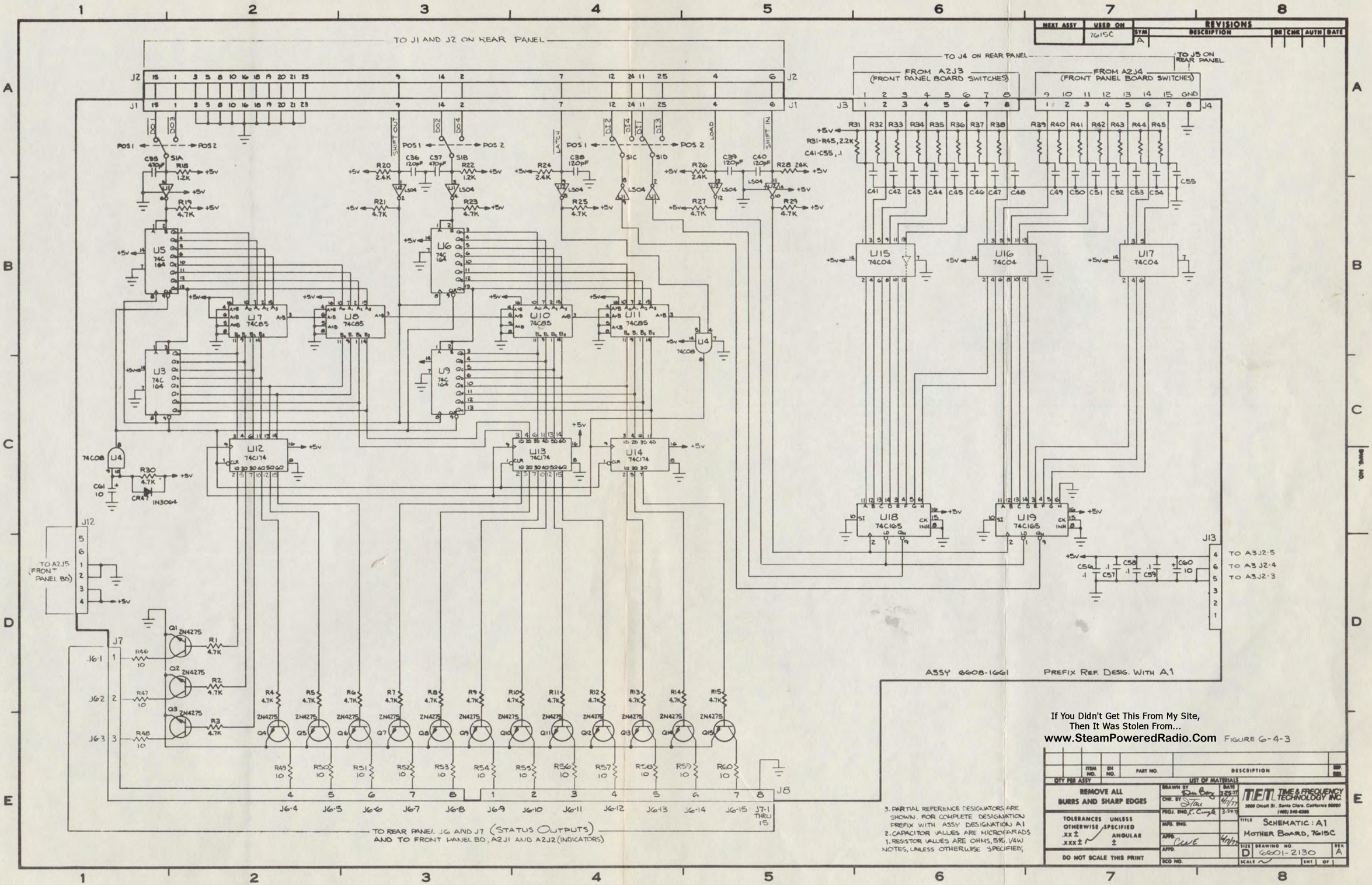

If You Didn't Get This From My Site,
Then It Was Stolen From...
www.SteamPoweredRadio.Com

Front PNL BD 7615-C Assembly # 6608-1671

Ckt. Ref.	Description	TFT Stock No.
C1	Cap Cer Disc .1UF 12V	1005-0100
C2	Cap Cer Disc .1UF 12V	1005-0100
CR1	Led HP 5082-4487 Clear	1285-4487
CR2	Led HP 5082-4487 Clear	1285-4487
CR3	Led HP 5082-4487 Clear	1285-4487
CR4	Led HP 5082-4487 Clear	1285-4487
CR5	Led HP 5082-4487 Clear	1285-4487
CR6	Led HP 5082-4487 Clear	1285-4487
CR7	Led HP 5082-4487 Clear	1285-4487
CR8	Led HP 5082-4487 Clear	1285-4487
CR9	Led HP 5082-4487 Clear	1285-4487
CR10	Led HP 5082-4487 Clear	1285-4487
CR11	Led HP 5082-4487 Clear	1285-4487
CR12	Led HP 5082-4487 Clear	1285-4487
CR13	Led HP 5082-4487 Clear	1285-4487
CR14	Led HP 5082-4487 Clear	1285-4487
CR15	Led HP 5082-4487 Clear	1285-4487
R1	Res Car Comp 1/4W 5% 330	1065-0330
R2	Res Car Comp 1/4W 5% 330	1065-0330
R3	Res Car Comp 1/4W 5% 330	1065-0330
R4	Res Car Comp 1/4W 5% 330	1065-0330
R5	Res Car Comp 1/4W 5% 330	1065-0330
R6	Res Car Comp 1/4W 5% 330	1065-0330
R7	Res Car Comp 1/4W 5% 330	1065-0330
R8	Res Car Comp 1/4W 5% 330	1065-0330
R9	Res Car Comp 1/4W 5% 330	1065-0330
R10	Res Car Comp 1/4W 5% 330	1065-0330
R11	Res Car Comp 1/4W 5% 330	1065-0330
R12	Res Car Comp 1/4W 5% 330	1065-0330
R13	Res Car Comp 1/4W 5% 330	1065-0330
R14	Res Car Comp 1/4W 5% 330	1065-0330
R15	Res Car Comp 1/4W 5% 330	1065-0330
S1	Switch Tog SPDT Black	1800-7101
S2	Switch Tog SPDT Black	1800-7101
S3	Switch Tog SPDT Black	1800-7101
S4	Switch Tog SPDT Black	1800-7101
S5	Switch Tog SPDT Black	1800-7101
S6	Switch Tog SPDT Black	1800-7101
S7	Switch Tog SPDT Black	1800-7101
S8	Switch Tog SPDT Black	1800-7101
S9	Switch Tog SPDT Black	1800-7101
S10	Switch Tog SPDT Black	1800-7101

Front PNL BD 7615-C Assembly # 6608-1671

Ckt. Ref.	Description	TFT Stock No.
S11	Switch Tog SPDT Black	1800-7101
S12	Switch Tog SPDT Black	1800-7101
S13	Switch Tog SPDT Black	1800-7101
S14	Switch Tog SPDT Black	1800-7101
S15	Switch Tog SPDT Black	1800-7101
U1	Plug, 14 Pin	2220-1014
U2	Plug, 14 Pin	2220-1014
U3	Plug, 14 Pin	2220-1014
	Socket, I/C 14 Pin	2250-1014
	Conn 8 Pinn Molex	2250-6008

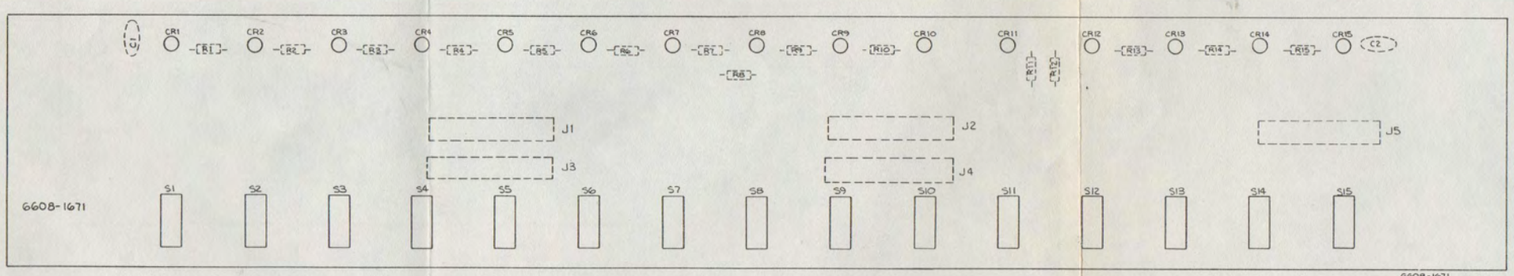

6608-1671
7615 C FRONT PANEL BOARD
SCHEMATIC 6601-2140

www.SteamPoweredRadio.Com

NEXT ASSY	USED ON
5004-7610	7615C

REVISIONS					
SYM	DESCRIPTION	DR	CHK	AUTH	DATE
A					

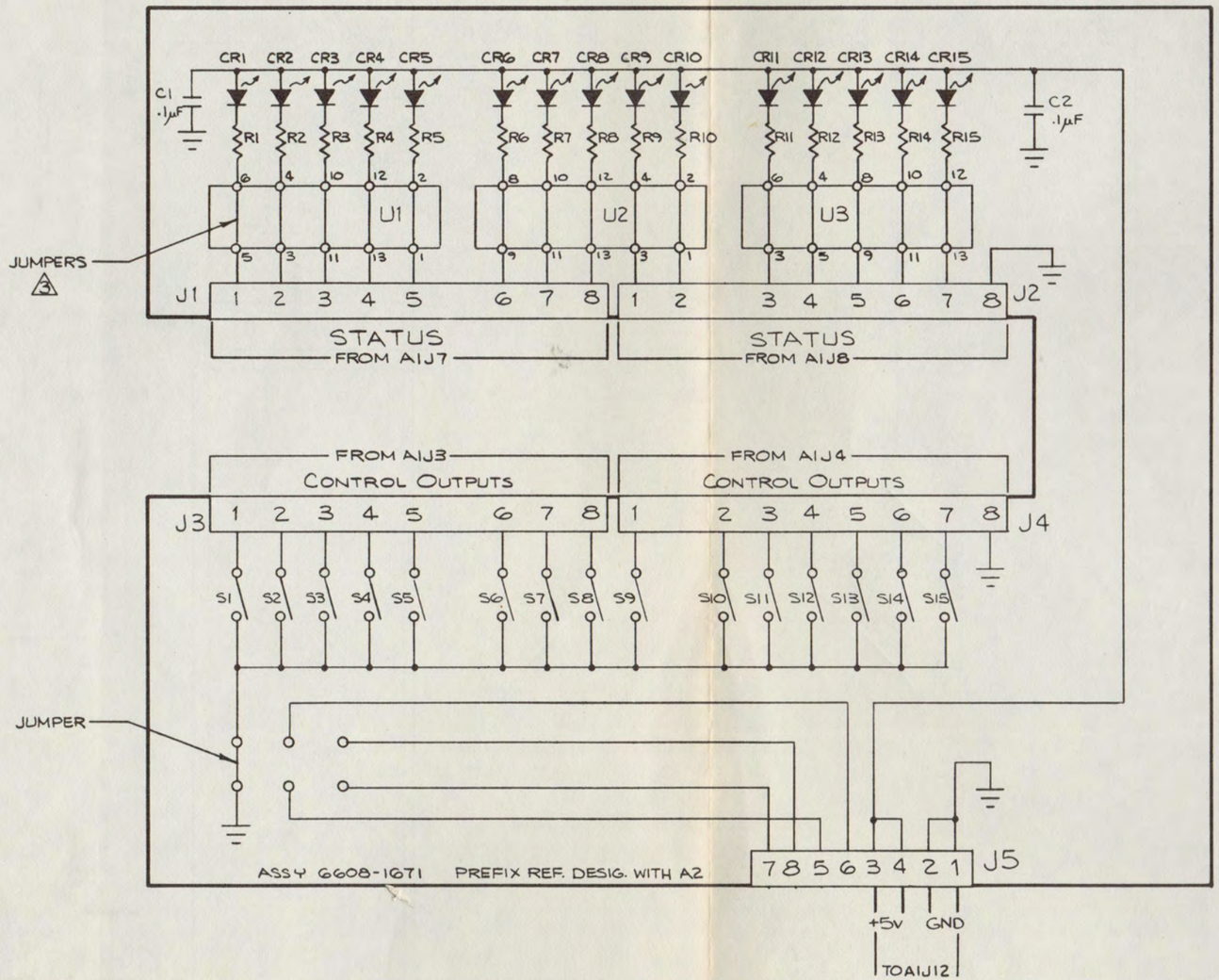

FIGURE 6-4-4

4. PARTIAL REFERENCE DESIGNATIONS ARE SHOWN. FOR COMPLETE DESIGNATION PREFIX WITH ASSY DESIGNATION A2

3. JUMPER SOCKETS FOR U1, U2, U3 AS SHOWN

2. DIODES ARE HP 5082-4487

1. RESISTORS ARE 330Ω, 1/4W, 5% COMP.

NOTES, UNLESS OTHERWISE SPECIFIED;

QTY PER ASSY	ITEM NO.	EN NO.	PART NO.	DESCRIPTION	REF. DES.

LIST OF MATERIALS

REMOVE ALL BURRS AND SHARP EDGES

TOLERANCES UNLESS OTHERWISE SPECIFIED
.XX ± ANGULAR
.XXX ± ±

DO NOT SCALE THIS PRINT

		DATE
DRAWN BY	DuBarry	3-22-77
CHK. BY	JTau	6/14/77
PROJ. ENG.	K. Cuyle	3-29-77
MFG. ENG.		
APPD.	CWE	6/17/77
APPD.		
ECO NO.		

TFT TIME & FREQUENCY TECHNOLOGY INC.
3000 Olcott St., Santa Clara, California 95050
(408) 246-6365

TITLE SCHEMATIC: A2 DISPLAY/CONTROL 7615C

SIZE C DRAWING NO. 6601-2140 REV. A

SCALE SHT. 1 OF 1

DWG. NO.

If You Didn't Get This From My Site,
Then It Was Stolen From...
www.SteamPoweredRadio.Com

Power Supply BD 7615-R Assembly # 6608-1401

Ckt. Ref.	Description	TFT Stock No.
C2	Cap Elect 500MFD 25V	1010-0511
C4	Cap Tan 10MFD 20V 10%	1008-0101
C5	Cap Elect 8000UF 25V	1010-8000
C6	Cap Tan 10MFD 20V 10%	1008-0101
CR1	Dio Rect 1N4001	1284-4002
CR4	Dio Rect 1N4001	1284-4002
CR6	Dio Rect 1N4001	1284-4002
CR7	Dio Rect 1N4001	1284-4002
U2	I/C Reg 1/2 Amp 12V	1100-2012
U3	I/C Reg 1/2 Amp + 5V	1100-4105
	Heatsink	2010-6111
	Tyton, QWK Tie	2140-0004
	Plug, 6 Pin	2250-6006
	Plug, Molex 5 Pin	2250-6505
	PCB Power Supply X-14	1600-1400REVA

Power Supply BD 7615-C Assembly # 6608-1402

Ckt. Ref.	Description	TFT Stock No.
C5	Cap Elect 8000UF 25V	1010-8000
C6	Cap Tan 10MFD 20V 10%	1008-0101
CR6	Dio Rect 1N4001	1284-4002
CR7	Dio Rect 1N4001	1284-4002
U3	I/C Rec 1/2 Amp + 5V	1100-4105
	Heatsink	2010-6111
	Tyton, QWK Tie	2140-0004
	Plug, 6 Pin	2250-6006
	Plug, Molex 5 Pin	2250-6505
	PCB Power Supply X-14	1600-1400REVA

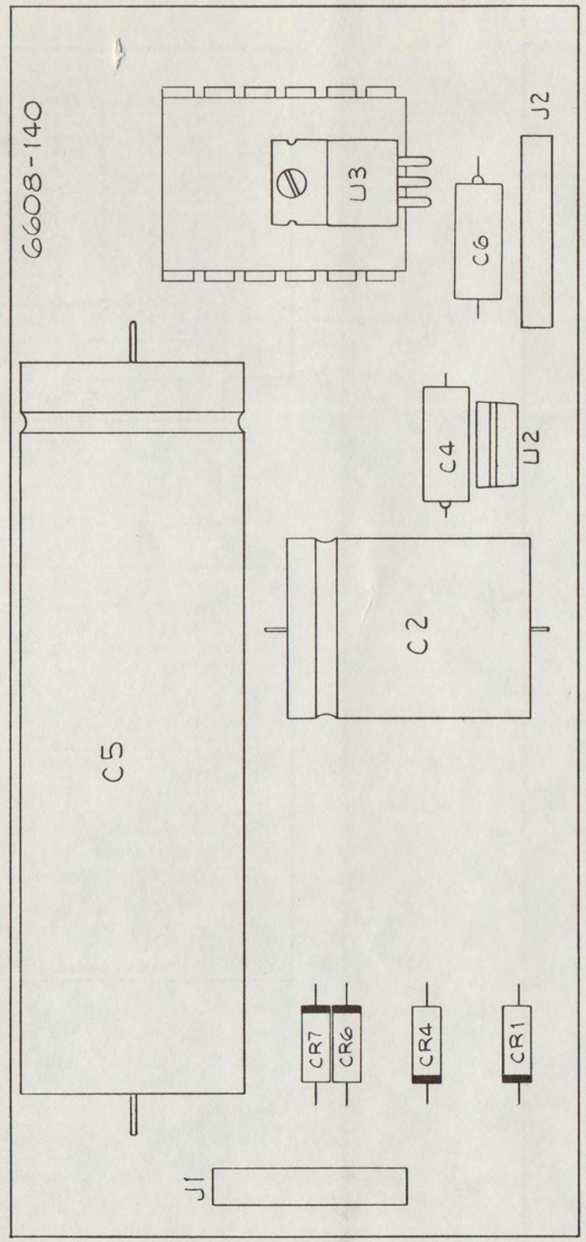

6608-140
7615 R/C POWER SUPPLY BOARD
SCHEMATIC: 6601-2150

www.SteamPoweredRadio.Com

NEXT ASSY	USED ON
5004-7610	7615 R/C

REVISIONS					
SYM	DESCRIPTION	DR	CHK	AUTH	DATE
A					

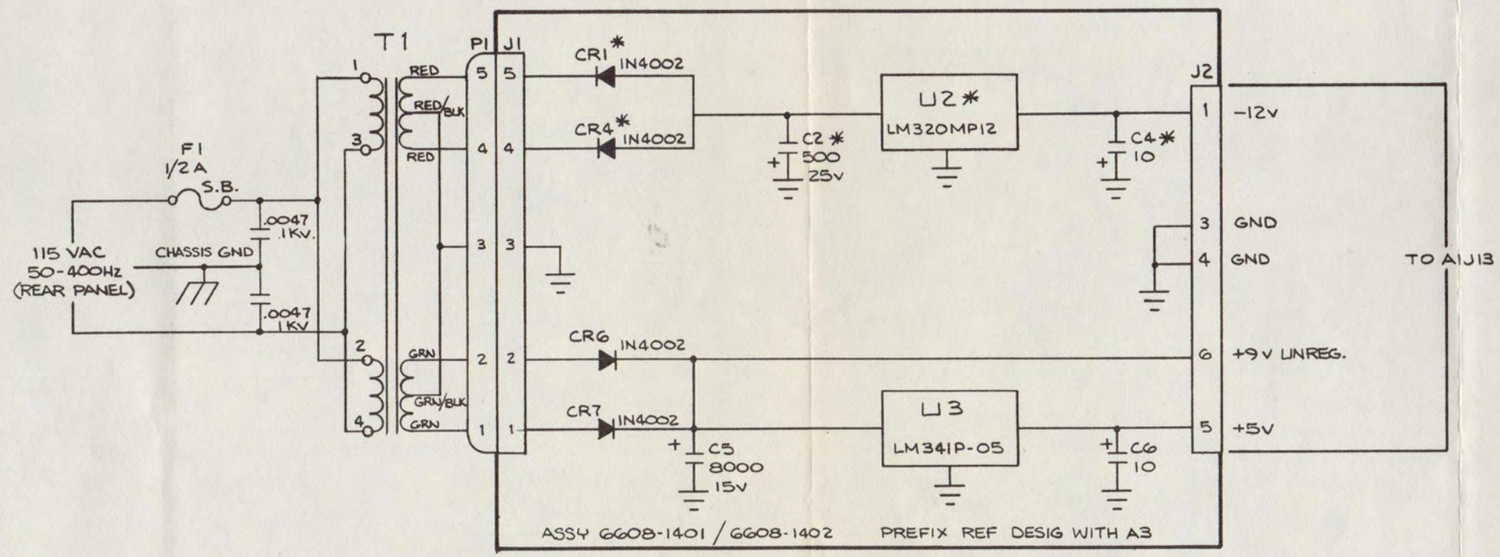

FIGURE 6-4-5

4. PARTIAL REFERENCE DESIGNATIONS ARE SHOWN. FOR COMPLETE DESIGNATIONS PREFIX WITH ASSEMBLY DESIGNATION A3
3. ASSY 6608-1401 IS 7615R, ASSY 6608-1402 IS 7615C
2. * INDICATES COMPONENTS ARE FOR 7615R ONLY
1. CAPACITOR VALUES ARE IN MICROFARADS

NOTES, UNLESS OTHERWISE SPECIFIED;

QTY PER ASSY	ITEM NO.	EN NO.	PART NO.	DESCRIPTION	REF. DES.

LIST OF MATERIALS

REMOVE ALL BURRS AND SHARP EDGES

TOLERANCES UNLESS OTHERWISE SPECIFIED
.XX ± ANGULAR
.XXX ± ±

DO NOT SCALE THIS PRINT

		DATE
DRAWN BY	[signature]	3-24-77
CHK. BY	[signature]	6/14/77
PROJ. ENG.	[signature]	3-29-77
MFG. ENG.		
APPD.	[signature]	6/17/77
APPD.		
ECO NO.		

TFT TIME & FREQUENCY TECHNOLOGY INC.
3000 Olcott St., Santa Clara, California 95050
(408) 246-6365

TITLE SCHEMATIC POWER SUPPLY A3 7615R/C

SIZE C | DRAWING NO. 6601-2150 | REV. A

SCALE ~ | SHT. 1 OF 1

DWG. NO.

If You Didn't Get This From My Site,
Then It Was Stolen From...
www.SteamPoweredRadio.Com

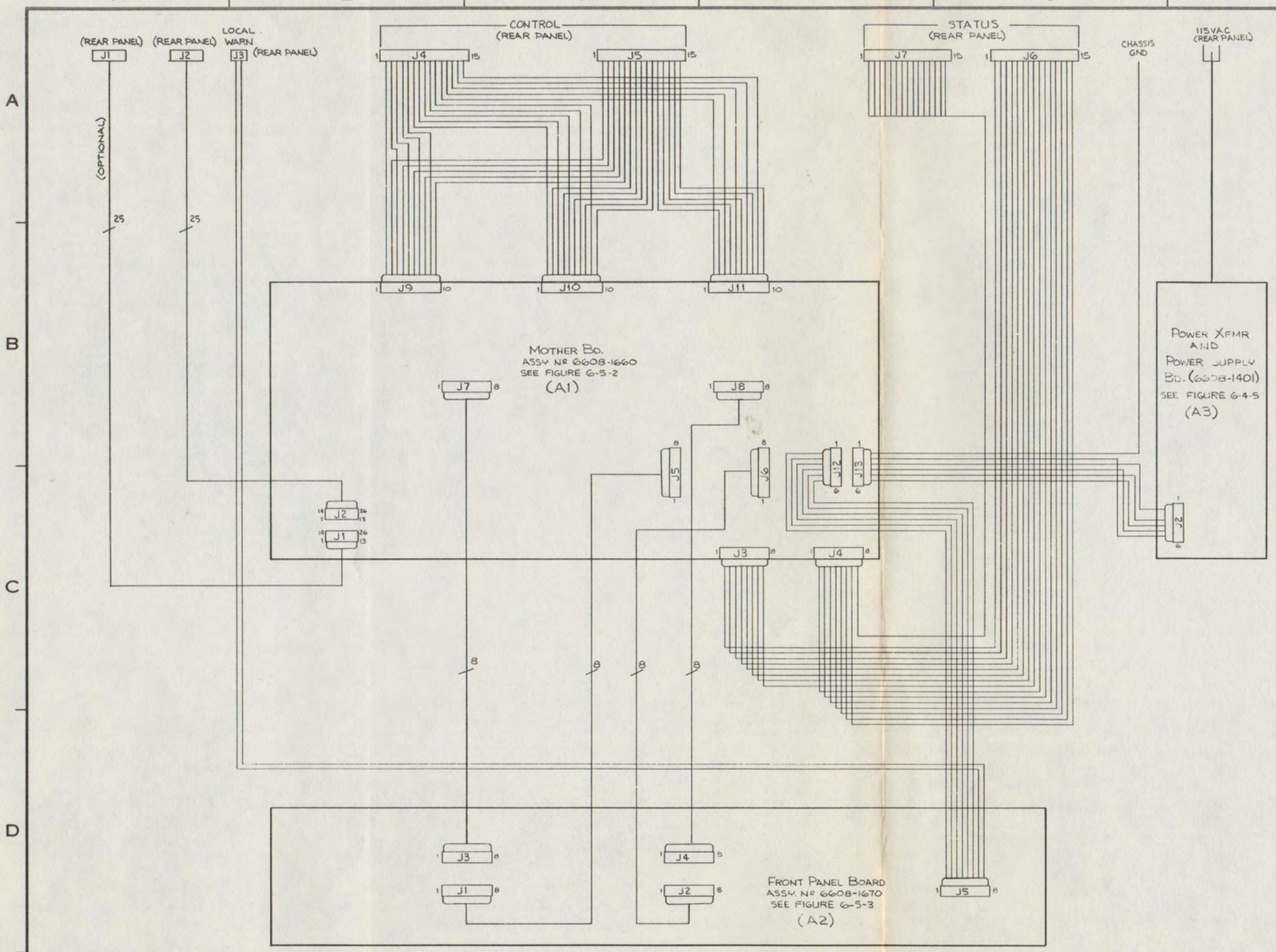

NEXT ASSY	USED ON
5004-7610	7615R

REVISIONS

SYM	DESCRIPTION	DR	CHK	AUTH	DATE
A	REL TO PRODUCTION	TD			5-6-77

QTY PER ASSY	ITEM NO.	EN NO.	PART NO.	DESCRIPTION	REF. DES.

LIST OF MATERIALS

REMOVE ALL BURRS AND SHARP EDGES

TOLERANCES UNLESS OTHERWISE SPECIFIED
.XX ± ~ ANGULAR ± ~
.XXX ±

DO NOT SCALE THIS PRINT

		DATE
DRAWN BY	DuBay	5-6-77
CHK. BY	Hau	6/17/77
PROJ. ENG.	CWE	6/17/77
MFG. ENG.		
APPD.		
APPD.		
ECO NO.		

TFT TIME & FREQUENCY TECHNOLOGY INC.
3000 Olcott St., Santa Clara, California 95050
(408) 246-6365

TITLE FIGURE 6-5-1
WIRE DIAGRAM: 7615R

SIZE D | DRAWING NO. 6600-1401 | REV. A
SCALE ~ | SHT. 1 OF 1

DWG. NO.

If You Didn't Get This From My Site,
Then It Was Stolen From...
www.SteamPoweredRadio.Com

Mother BD 7615-R Assembly # 6608-1660

Ckt. Ref.	Description	TFT Stock No.
C1	Cap Cer Disc .0047MFD	1005-4749
C2	Cap Cer Disc .0047MFD	1005-4749
C3	Cap Cer Disc .0047MFD	1005-4749
C4	Cap Cer Disc .0047MFD	1005-4749
C5	Cap Cer Disc .0047MFD	1005-4749
C6	Cap Cer Disc .0047MFD	1005-4749
C7	Cap Cer Disc .0047MFD	1005-4749
C8	Cap Cer Disc .0047MFD	1005-4749
C9	Cap Cer Disc .0047MFD	1005-4749
C10	Cap Cer Disc .0047MFD	1005-4749
C11	Cap Cer Disc .0047MFD	1005-4749
C12	Cap Cer Disc .0047MFD	1005-4749
C13	Cap Cer Disc .0047MFD	1005-4749
C14	Cap Cer Disc .0047MFD	1005-4749
C15	Cap Cer Disc .0047MFD	1005-4749
C16	Cap Cer Disc .0047MFD	1005-4749
C17	Cap Cer Disc .0047MFD	1005-4749
C18	Cap Cer Disc .0047MFD	1005-4749
C19	Cap Cer Disc .0047MFD	1005-4749
C20	Cap Cer Disc .0047MFD	1005-4749
C21	Cap Cer Disc .0047MFD	1005-4749
C22	Cap Cer Disc .0047MFD	1005-4749
C23	Cap Cer Disc .0047MFD	1005-4749
C24	Cap Cer Disc .0047MFD	1005-4749
C25	Cap Cer Disc .0047MFD	1005-4749
C26	Cap Cer Disc .0047MFD	1005-4749
C27	Cap Cer Disc .0047MFD	1005-4749
C28	Cap Cer Disc .0047MFD	1005-4749
C29	Cap Cer Disc .0047MFD	1005-4749
C30	Cap Cer Disc .0047MFD	1005-4749
C31	Cap Cer Disc .05MFD	1005-5039
C32	Cap Cer Disc .05MFD	1005-5039
C33	Cap Tan 10MFD 20V 10%	1008-0100
C34	Cap Tan 10MFD 20V 10%	1008-0100
C35	Cap Cer Disc 500pF 5%	1005-0501
C36	Cap Cer Disc 120pF 5%	1005-0121
C37	Cap Cer Disc 500pF 5%	1005-0501
C38	Cap Cer Disc 120pF 5%	1005-0121
C39	Cap Cer Disc 120pF 5%	1005-0121
C40	Cap Cer Disc 120pF 5%	1005-0121
C41	Cap Cer Disc .1UF 12V	1005-0100
C42	Cap Cer Disc .1UF 12V	1005-0100

Mother BD 7615-R Assembly # 6608-1660

Ckt. Ref.	Description	TFT Stock No.
C43	Cap Cer Disc .1UF 12V	1005-0100
C44	Cap Cer Disc .1UF 12V	1005-0100
C45	Cap Cer Disc .1UF 12V	1005-0100
C46	Cap Cer Disc .1UF 12V	1005-0100
C47	Cap Cer Disc .1UF 12V	1005-0100
C48	Cap Cer Disc .1UF 12V	1005-0100
C49	Cap Cer Disc .1UF 12V	1005-0100
C50	Cap Cer Disc .1UF 12V	1005-0100
C51	Cap Cer Disc .1UF 12V	1005-0100
C52	Cap Cer Disc .1UF 12V	1005-0100
C53	Cap Cer Disc .1UF 12V	1005-0100
C54	Cap Cer Disc .1UF 12V	1005-0100
C55	Cap Cer Disc .1UF 12V	1005-0100
C56	Cap Cer Disc .1UF 12V	1005-0100
C57	Cap Cer Disc .1UF 12V	1005-0100
C58	Cap Cer Disc .1UF 12V	1005-0100
C59	Cap Cer Disc .1UF 12V	1005-0100
C60	Cap Tan 10MFD 20V 10%	1008-0100
C61	Cap Tan 10MFD 20V 10%	1008-0100
C62	Cap Cer Disc .05MFD	1005-5039
CR1	Dio Rect 1N4001	1284-4002
CR2	Dio Rect 1N4001	1284-4002
CR3	Dio Rect 1N4001	1284-4002
CR4	Dio Rect 1N4001	1284-4002
CR5	Dio Rect 1N4001	1274-4002
CR6	Dio Rect 1N4001	1284-4002
CR7	Dio Rect 1N4001	1284-4002
CR8	Dio Rect 1N4001	1284-4002
CR9	Dio Rect 1N4001	1284-4002
CR10	Dio Rect 1N4001	1284-4002
CR11	Dio Rect 1N4001	1284-4002
CR12	Dio Rect 1N4001	1284-4002
CR13	Dio Rect 1N4001	1284-4002
CR14	Dio Rect 1N4001	1284-4002
CR15	Dio Rect 1N4001	1284-4002
CR16	Dio Rect 1N4001	1284-4002
CR17	Dio Rect 1N4001	1284-4002
CR18	Dio Rect 1N4001	1284-4002
CR19	Dio Rect 1N4001	1284-4002
CR20	Dio Rect 1N4001	1284-4002
CR21	Dio Rect 1N4001	1284-4002
CR22	Dio Rect 1N4001	1284-4002

Mother BD 7615-R Assembly # 6608-1660

Ckt. Ref.	Description	TFT Stock No.
CR23	Dio Rect 1N4001	1284-4002
CR24	Dio Rect 1N4001	1284-4002
CR25	Dio Rect 1N4001	1284-4002
CR26	Dio Rect 1N4001	1284-4002
CR27	Dio Rect 1N4001	1284-4002
CR28	Dio Rect 1N4001	1284-4002
CR29	Dio Rect 1N4001	1284-4002
CR30	Dio Rect 1N4001	1284-4002
CR31	Dio 1N3064	1281-3064
CR32	Dio 1N3064	1281-3064
CR33	Dio 1N3064	1281-3064
CR34	Dio 1N3064	1281-3064
CR35	Dio 1N3064	1281-3064
CR36	Dio 1N3064	1281-3064
CR37	Dio 1N3064	1281-3064
CR38	Dio 1N3064	1281-3064
CR39	Dio 1N3064	1281-3064
CR40	Dio 1N3064	1281-3064
CR42	Dio 1N3064	1281-3064
CR43	Dio 1N3064	1281-3064
CR44	Dio 1N3064	1281-3064
CR45	Dio 1N3064	1281-3064
CR46	Dio 1N3064	1281-3064
CR47	Dio 1N3064	1281-3064
J1	Switch Slide 4PDT	1840-2240
K1	Relay A2 A2530-08-1	1880-0003
K2	Relay A2 A2530-08-1	1880-0003
K3	Relay A2 A2530-08-1	1880-0003
K4	Relay A2 A2530-08-1	1880-0003
K5	Relay A2 A2530-08-1	1880-0003
K6	Relay A2 A2530-08-1	1880-0003
K7	Relay A2 A2530-08-1	1880-0003
K8	Relay A2 A2530-08-1	1880-0003
K9	Relay A2 A2530-08-1	1880-0003
K10	Relay A2 A2530-08-1	1880-0003
K11	Relay A2 A2530-08-1	1880-0003
K12	Relay A2 A2530-08-1	1880-0003
K13	Relay A2 A2530-08-1	1880-0003
K14	Relay A2 A2530-08-1	1880-0003
K15	Relay A2 A2530-08-1	1880-0003
Q1	Xistor 2N4275	1271-4275
Q2	Xistor 2N4275	1271-4275
Q3	Xistor 2N4275	1271-4275

Mother BD 7615-R Assembly # 6608-1660

Ckt. Ref.	Description	TFT Stock No.
Q4	Xistor 2N4275	1271-4275
Q5	Xistor 2N4275	1271-4275
Q6	Xistor 2N4275	1271-4275
Q7	Xistor 2N4275	1271-4275
Q8	Xistor 2N4275	1271-4275
Q9	Xistor 2N4275	1271-4275
Q10	Xistor 2N4275	1271-4275
Q11	Xistor 2N4275	1271-4275
Q12	Xistor 2N4275	1271-4275
Q13	Xistor 2N4275	1271-4275
Q14	Xistor 2N4275	1271-4275
Q15	Xistor 2N4275	1271-4275
R1	Res Car Comp 1/4W 5% 4.7K	1065-4701
R2	Res Car Comp 1/4W 5% 4.7K	1065-4701
R3	Res Car Comp 1/4W 5% 4.7K	1065-4701
R4	Res Car Comp 1/4W 5% 4.7K	1065-4701
R5	Res Car Comp 1/4W 5% 4.7K	1065-4701
R6	Res Car Comp 1/4W 5% 4.7K	1065-4701
R7	Res Car Comp 1/4W 5% 4.7K	1065-4701
R8	Res Car Comp 1/4W 5% 4.7K	1065-4701
R9	Res Car Comp 1/4W 5% 4.7K	1065-4701
R10	Res Car Comp 1/4W 5% 4.7K	1065-4701
R11	Res Car Comp 1/4W 5% 4.7K	1065-4701
R12	Res Car Comp 1/4W 5% 4.7K	1065-4701
R13	Res Car Comp 1/4W 5% 4.7K	1065-4701
R14	Res Car Comp 1/4W 5% 4.7K	1065-4701
R15	Res Car Comp 1/4W 5% 4.7K	1065-4701
R16	Res Car Comp 1/4W 5% 1K	1065-1001
R17	Res Car Comp 1/4W 5% 560	1065-0560
R18	Res Car Comp 1/4W 5% 1.2K	1065-1201
R19	Res Car Comp 1/4W 5% 4.7K	1065-4701
R20	Res Car Comp 1/4W 5% 2.4K	1065-2401
R21	Res Car Comp 1/4W 5% 4.7K	1065-4701
R22	Res Car Comp 1/4W 5% 2.4K	1065-2401
R23	Res Car Comp 1/4W 5% 4.7K	1065-4701
R24	Res Car Comp 1/4W 5% 2.4K	1065-2401
R25	Res Car Comp 1/4W 5% 4.7K	1065-4701
R27	Res Car Comp 1/4W 5% 4.7K	1065-4701
R28	Res Car Comp 1/4W 5% 2.4K	1065-2401
R29	Res Car Comp 1/4W 5% 4.7K	1065-4701
R30	Res Car Comp 1/4W 5% 4.7K	1065-4701
R31	Res Car Comp 1/4W 5% 2.2K	1065-2201

Mother BD 7615-R Assembly # 6608-1660

Ckt. Ref.	Description	TFT Stock No.
R32	Res Car Comp 1/4W 5% 2.2K	1065-2201
R33	Res Car Comp 1/4W 5% 2.2K	1065-2201
R34	Res Car Comp 1/4W 5% 2.2K	1065-2201
R35	Res Car Comp 1/4W 5% 2.2K	1065-2201
R36	Res Car Comp 1/4W 5% 2.2K	1065-2201
R37	Res Car Comp 1/4W 5% 2.2K	1065-2201
R38	Res Car Comp 1/4W 5% 2.2K	1065-2201
R39	Res Car Comp 1/4W 5% 2.2K	1065-2201
R40	Res Car Comp 1/4W 5% 2.2K	1065-2201
R41	Res Car Comp 1/4W 5% 2.2K	1065-2201
R42	Res Car Comp 1/4W 5% 2.2K	1065-2201
R43	Res Car Comp 1/4W 5% 2.2K	1065-2201
R44	Res Car Comp 1/4W 5% 2.2K	1065-2201
R45	Res Car Comp 1/4W 5% 2.2K	1065-2201
U1	I/C SN74LS04N	1101-7404
U2	I/C SN74LS04N	1101-7404
U3	I/C SN74LS04N	1101-7404
U4	I/C MM74C85N	1102-7408
U5	I/C MM74C164	1102-0164
U6	I/C MM74C164	1102-0164
U7	I/C MM74C85N	1102-7485
U8	I/C MM74C85N	1102-7485
U9	I/C MM74C164	1102-0164
U10	I/C MM74C85N	1102-7485
U11	I/C MM74C85N	1102-7485
U12	I/C MM74C174N	1102-0174
U13	I/C MM74C174N	1102-0174
U14	I/C MM74C174N	1102-0174
U15	I/C MM74C04	1102-7404
U16	I/C MM74C04	1102-7404
U17	I/C MM74C04	1102-7404
U18	I/C MM74C165	1102-0165
U19	I/C MM74C165	1102-0165
	Socket, I/C 14 Pin	2250-1014
	Socket, I/C 16 Pin	2250-1016
	Plug, 6 Pin	2250-6006
	Conn 8 Pin Molex	2250-6008
	Conn 10 Pin Polerized	2250-6010
	Conn 26 Pin M Header	2250-6512

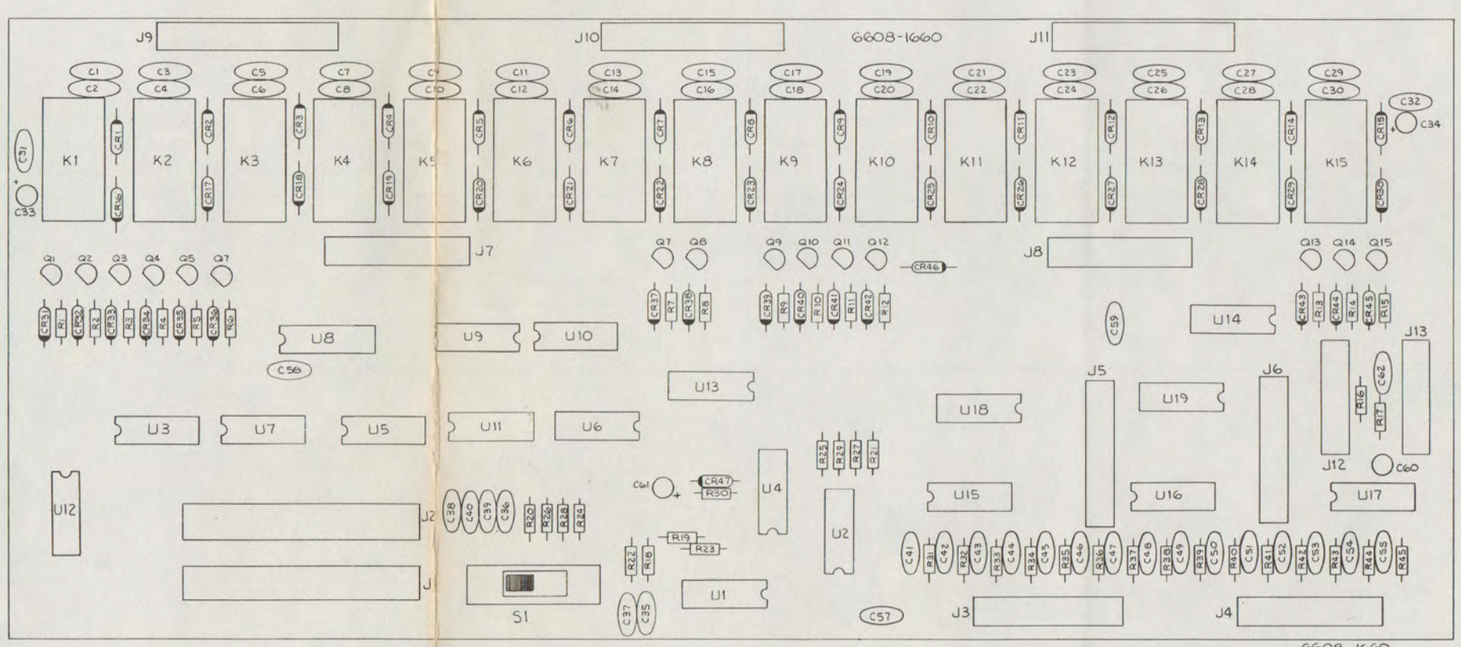

6608-1660
7615-R Mother Board
Schematic 6601-2110

www.SteamPoweredRadio.Com

www.SteamPoweredRadio.Com

NEXT ASSY	USED ON
	7615 R

REVISIONS

SYM	DESCRIPTION	DR	CHK	AUTH	DATE
A					

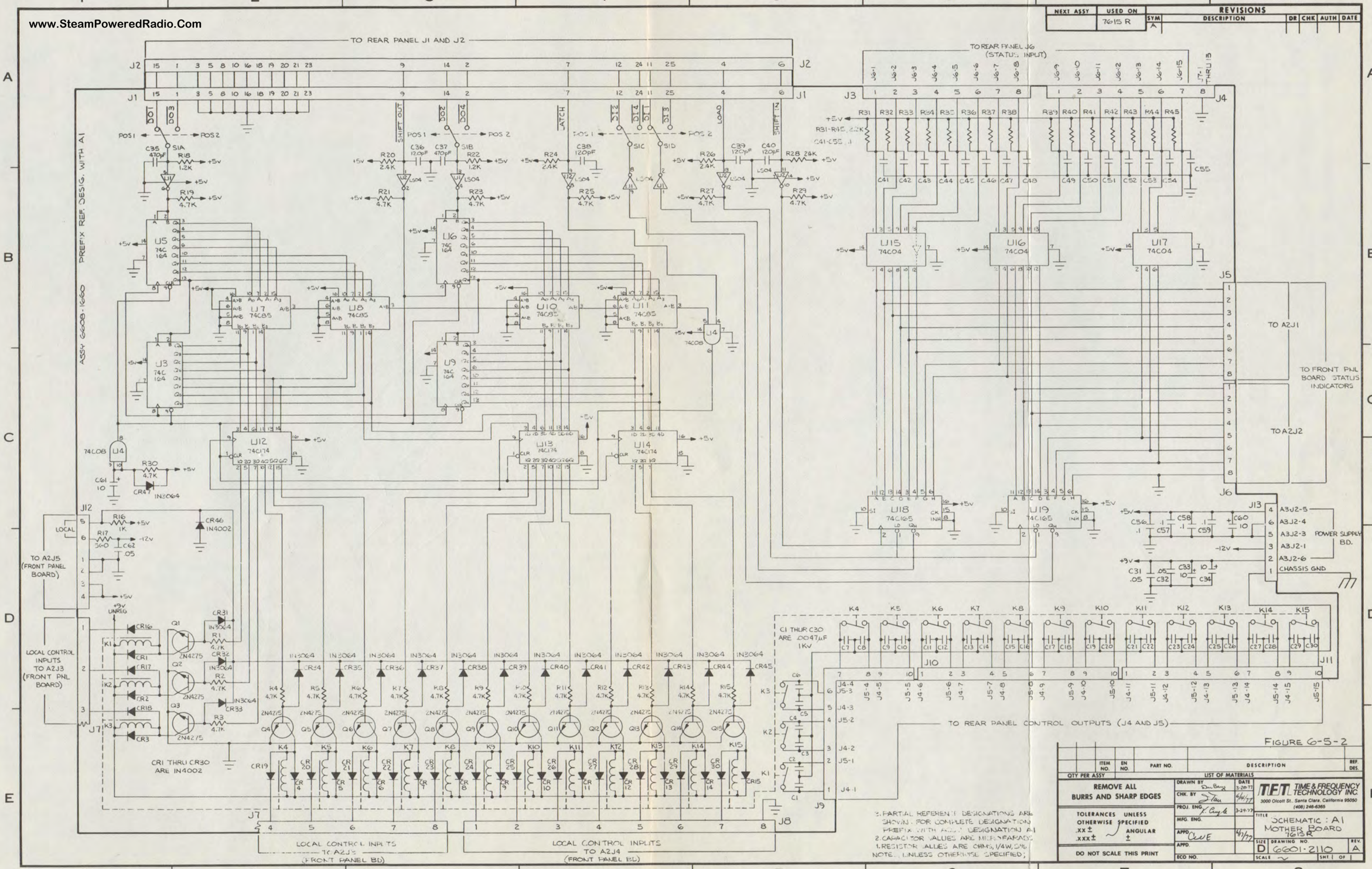

FIGURE 6-5-2

QTY PER ASSY	ITEM NO.	EN NO.	PART NO.	DESCRIPTION	REF. DES.

LIST OF MATERIALS

REMOVE ALL BURRS AND SHARP EDGES

TOLERANCES UNLESS OTHERWISE SPECIFIED .XX ± .XXX ± ANGULAR ±

DO NOT SCALE THIS PRINT

		DATE
DRAWN BY	D. Bax	3-26-77
CHK. BY		6/6/77
PROJ. ENG.		3-29-77
MFG. ENG.		
APPD.		4/1/77
APPD.		
ECO NO.		

TFT TIME & FREQUENCY TECHNOLOGY INC.
3000 Olcott St., Santa Clara, California 95050
(408) 246-6365

TITLE: SCHEMATIC: A1 MOTHER BOARD 7615R

SIZE D | DRAWING NO. 6601-2110 | REV. A | SCALE ~ | SHT. OF

NOTES:
1. PARTIAL REFERENCE DESIGNATIONS ARE SHOWN. FOR COMPLETE DESIGNATION PREFIX WITH ASSY DESIGNATION A1
2. CAPACITOR VALUES ARE MICROFARADS
3. RESISTOR VALUES ARE OHMS, 1/4W, 5% (UNLESS OTHERWISE SPECIFIED)

Front PNL BD 7615-R Assembly # 6608-1670

Ckt. Ref.	Description	TFT Stock No.
C1	Cap Cer Disc .1UF 12V	1005-0100
C2	Cap Cer Disc .1UF 12V	1005-0100
CR1	Led HP 5082-4487 Clear	1285-4487
CR2	Led HP 5082-4487 Clear	1285-4487
CR3	Led HP 5082-4487 Clear	1285-4487
CR4	Led HP 5082-4487 Clear	1285-4487
CR5	Led HP 5082-4487 Clear	1285-4487
CR6	Led HP 5082-4487 Clear	1285-4487
CR7	Led HP 5082-4487 Clear	1285-4487
CR8	Led HP 5082-4487 Clear	1285-4487
CR9	Led HP 5082-4487 Clear	1285-4487
CR10	Led HP 5082-4487 Clear	1285-4487
CR11	Led HP 5082-4487 Clear	1285-4487
CR12	Led HP 5082-4487 Clear	1285-4487
CR13	Led HP 5082-4487 Clear	1285-4487
CR14	Led HP 5082-4487 Clear	1285-4487
CR15	Led HP 5082-4487 Clear	1285-4487
R1	Res Car Comp 1/4W 5% 330	1065-0330
R2	Res Car Comp 1/4W 5% 330	1065-0330
R3	Res Car Comp 1/4W 5% 330	1065-0330
R4	Res Car Comp 1/4W 5% 330	1065-0330
R5	Res Car Comp 1/4W 5% 330	1065-0330
R6	Res Car Comp 1/4W 5% 330	1065-0330
R7	Res Car Comp 1/4W 5% 330	1065-0330
R8	Res Car Comp 1/4W 5% 330	1065-0330
R9	Res Car Comp 1/4W 5% 330	1065-0330
R10	Res Car Comp 1/4W 5% 330	1065-0330
R11	Res Car Comp 1/4W 5% 330	1065-0330
R12	Res Car Comp 1/4W 5% 330	1065-0330
R13	Res Car Comp 1/4W 5% 330	1065-0330
R14	Res Car Comp 1/4W 5% 330	1065-0330
R15	Res Car Comp 1/4W 5% 330	1065-0330
S1	Switch Tog SPDT Black	1800-7101
S2	Switch Tog SPDT Black	1800-7101
S3	Switch Tog SPDT Black	1800-7101
S4	Switch Tog SPDT Black	1800-7101
S5	Switch Tog SPDT Black	1800-7101
S6	Switch Tog SPDT Black	1800-7101
S7	Switch Tog SPDT Black	1800-7101
S8	Switch Tog SPDT Black	1800-7101
S9	Switch Tog SPDT Black	1800-7101
S10	Switch Tog SPDT Black	1800-7101

Front PNL BD 7615-R Assembly # 6608-1670

Ckt. Ref.	Description	TFT Stock No.
S11	Switch Tog SPDT Black	1800-7101
S12	Switch Tog SPDT Black	1800-7101
S13	Switch Tog SPDT Black	1800-7101
S14	Switch Tog SPDT Black	1800-7101
S15	Switch Tog SPDT Black	1800-7101
S16	Switch Tog 3 Pole Black	1800-7301
U1	I/C 75L505	1101-7405
U2	I/C 74L505	1101-7405
U3	I/C 74L505	1101-7405
	Socket I/C 14 Pin	2250-1014
	Conn 8 Pin Molex	2250-6008
	PC BD Front PNL 7615	1600-1670REVA

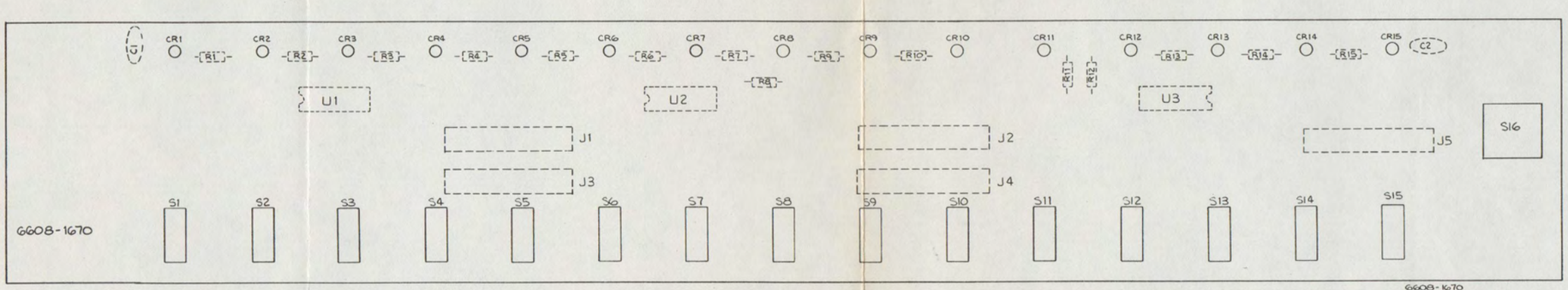

6608-1670
7615-R FRONT PANEL BD.
SCHEMATIC 6601-2120

www.SteamPoweredRadio.Com

NEXT ASSY	USED ON
5004-7610	7615R

REVISIONS					
SYM	DESCRIPTION	DR	CHK	AUTH	DATE
A					

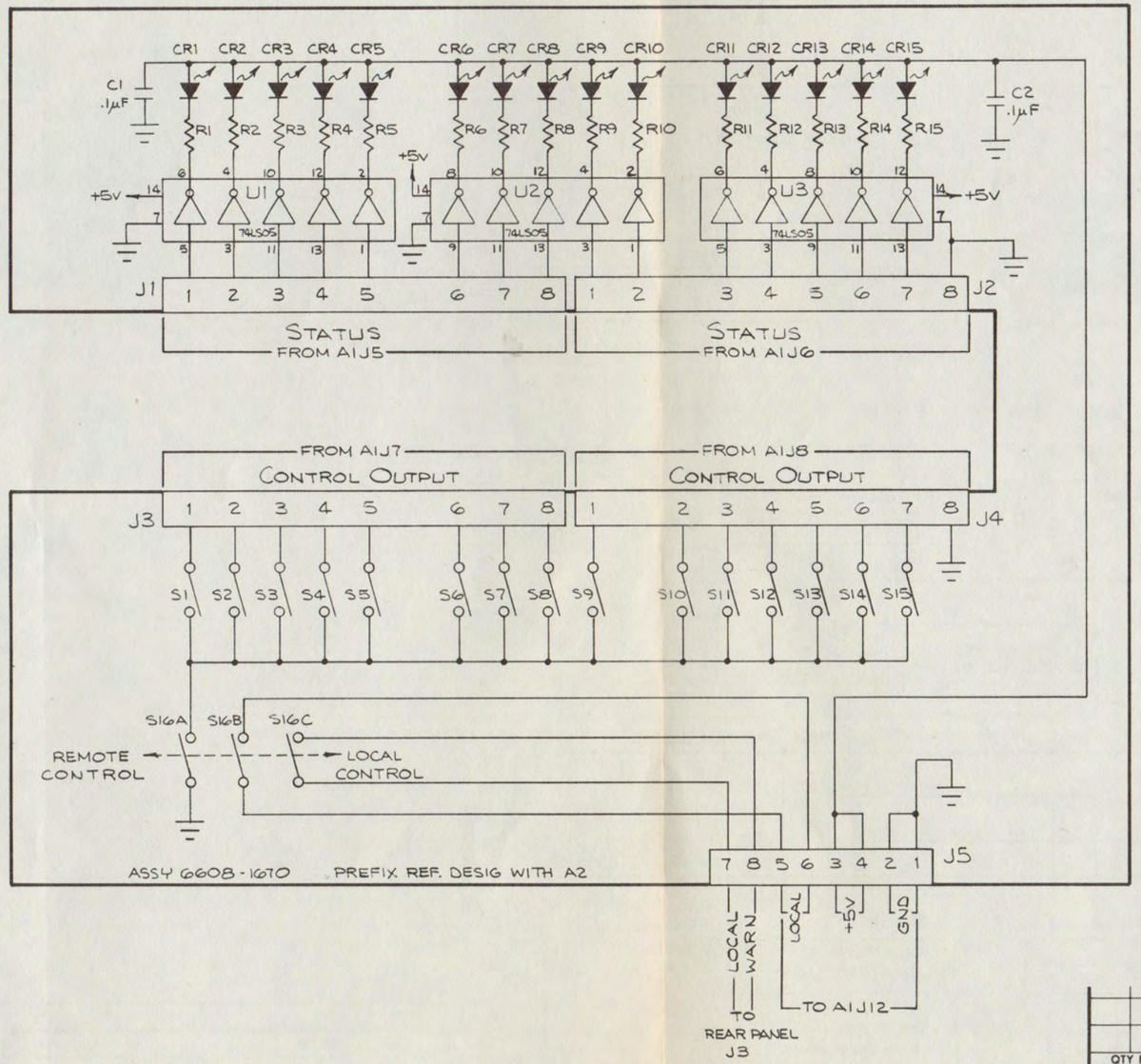

FIGURE 6-5-3

3. PARTIAL REFERENCE DESIGNATIONS ARE SHOWN. FOR COMPLETE DESIGNATION PREFIX WITH ASSY DESIGNATION A2.

2. DIODES ARE HP 5082-4487

1. RESISTORS ARE 330Ω, 1/4W, 5% COMP.

NOTES, UNLESS OTHERWISE SPECIFIED;

QTY PER ASSY	ITEM NO.	EN NO.	PART NO.	DESCRIPTION	REF. DES.

LIST OF MATERIALS

REMOVE ALL BURRS AND SHARP EDGES

TOLERANCES UNLESS OTHERWISE SPECIFIED
.XX ± ANGULAR
.XXX ± ±

DO NOT SCALE THIS PRINT

		DATE
DRAWN BY	DuBary	3-23-77
CHK. BY	Tau	6/14/77
PROJ. ENG.	K. Cuyle	3-29-77
MFG. ENG.		
APPD.	CWE	6/17/77
APPD.		
ECO NO.		

TFT TIME & FREQUENCY TECHNOLOGY INC.
3000 Olcott St., Santa Clara, California 95050
(408) 246-6365

TITLE SCHEMATIC: A2 DISPLAY/CONTROL 7615R

SIZE C DRAWING NO. 6601-2120 REV. A

SCALE SHT. 1 OF 1

DWG. NO.

If You Didn't Get This From My Site,
Then It Was Stolen From...
www.SteamPoweredRadio.Com

NEXT ASSY	USED ON
5004-7610	7630

REVISIONS

SYM	DESCRIPTION	DR	CHK	AUTH	DATE
A	REL TO PROD.	TD			5-5-77

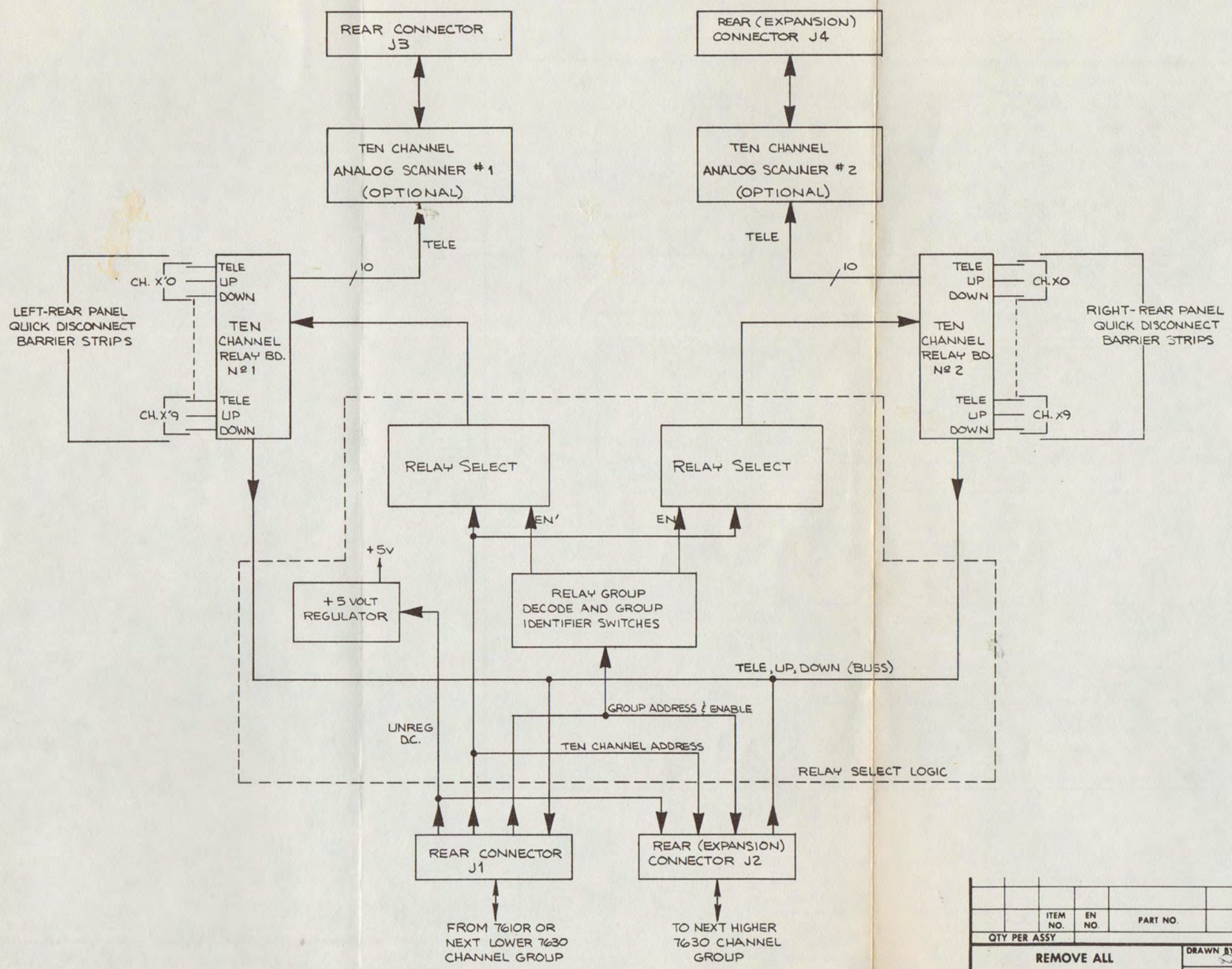

QTY PER ASSY	ITEM NO.	EN NO.	PART NO.	DESCRIPTION	REF. DES.

LIST OF MATERIALS

REMOVE ALL BURRS AND SHARP EDGES

TOLERANCES UNLESS OTHERWISE SPECIFIED
.XX ± ~ ANGULAR
.XXX ± ± ~

DO NOT SCALE THIS PRINT

		DATE
DRAWN BY	Du Bay	5/5/77
CHK. BY	Stau	6/11/77
PROJ. ENG.	CWE	6/17/77
MFG. ENG.		
APPD.	CWE	6/17/77
APPD.		
ECO NO.		

TFT TIME & FREQUENCY TECHNOLOGY INC.
3000 Olcott St., Santa Clara, California 95051
(408) 246-6365

TITLE FIGURE 6-6-1 BLOCK DIAGRAM MODEL 7630

SIZE C DRAWING NO. 6600-1410 REV. A

SCALE ~ SHT 1 OF 1

DWG. NO.

www.SteamPoweredRadio.Com

BISHOP GRAPHICS/ACCUPRESS REORDER NO. A-8835

NEXT ASSY	USED ON
5004-7610	7630

REVISIONS

SYM	DESCRIPTION	DR	CHK	AUTH	DATE
A	REL TO PROD	TD			5-6-77

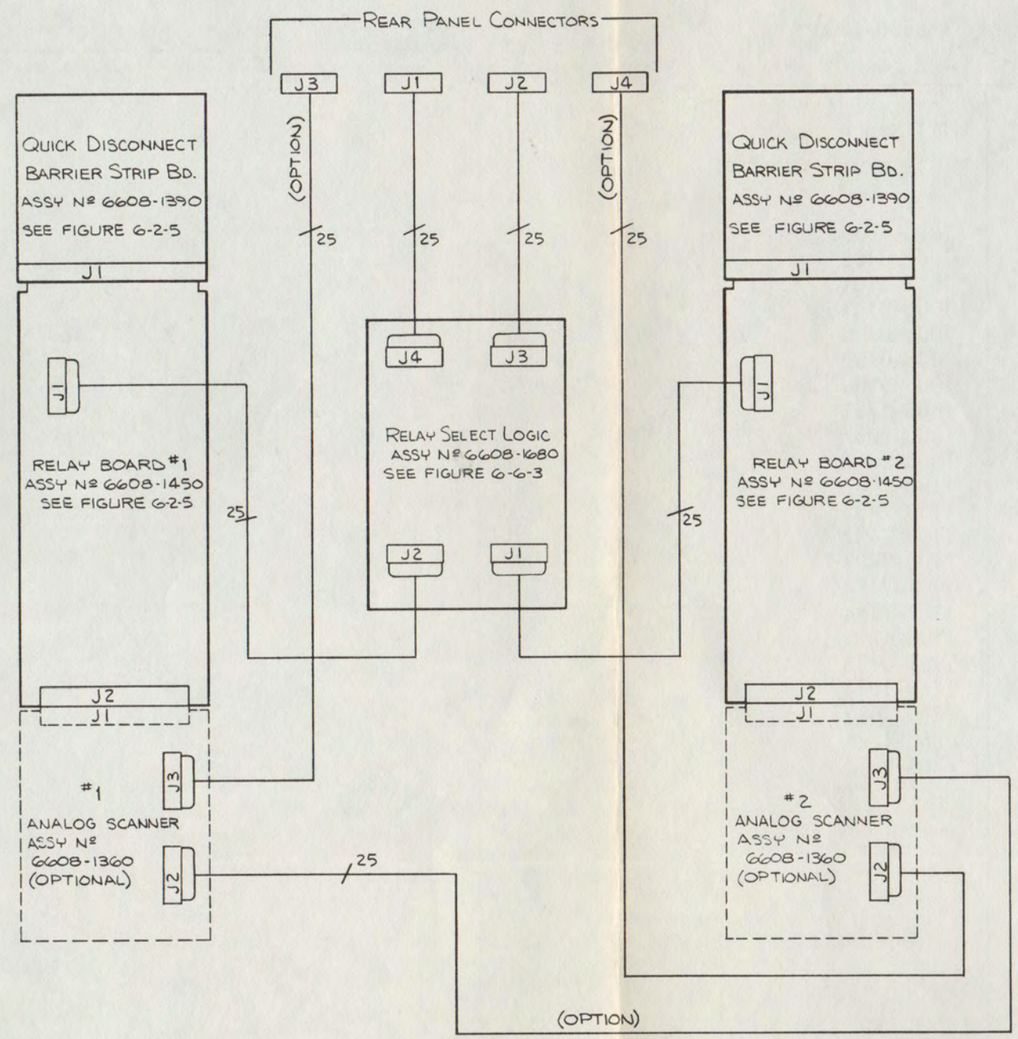

QTY PER ASSY	ITEM NO.	EN NO.	PART NO.	DESCRIPTION	REF. DES.

LIST OF MATERIALS

REMOVE ALL BURRS AND SHARP EDGES

TOLERANCES UNLESS OTHERWISE SPECIFIED
.XX ± ~ ANGULAR ± ~
.XXX ± ~

DO NOT SCALE THIS PRINT

		DATE
DRAWN BY	Dan Bays	5-6-77
CHK. BY	[illegible]	6-4-77
PROJ. ENG.	[illegible]	6/17/77
MFG. ENG.		
APPD.	[illegible]	6/17/77
APPD.		
ECO NO.		

TFTL TIME & FREQUENCY TECHNOLOGY INC.
3000 Olcott St., Santa Clara, California 95051
(408) 246-6365

TITLE FIGURE 6-6-2
WIRE DIAGRAM
MODEL 7630

SIZE C | DRAWING NO. 6600-1420 | REV. A

SCALE ~ | SHT 1 OF 1

DWG. NO.

www.SteamPoweredRadio.Com

BISHOP GRAPHICS/ACCUPRESS
REORDER NO. A-8835

Model 7630 Relay Select BD Assembly # 6608-1680

Ckt. Ref.	Description	TFT Stock No.
C1	Cap Cer Disc .05MFD	1005-5039
C2	Cap Tan 100MFD 20V 20%	1008-0102
C3	Cap Tan 10MFD 20V 10%	1008-0101
C4	Cap Tan 10MFD 20V 10%	1008-0101
C5	Cap Cer Disc .1UF 12V	1005-0100
C6	Cap Cer Disc .1UF 12V	1005-0100
C7	Cap Cer Disc .1UF 12V	1005-0100
R1	Res Car Comp 1/4W 5% 4.7K	1065-4701
SW1	Switch 14 Pin Dip	1800-2067
SW2	Switch 14 Pin Dip	1800-2067
U1	I/C DM7407N	1100-7407
U2	I/C DM7407N	1100-7407
U3	I/C DM7407N	1100-7407
U4	I/C DM7407N	1100-7407
U5	I/C DM74L5154N	1101-7154
U6	I/C DM74L5154N	1101-7154
U7	I/C LM342P-5-0	1100-4205
U8	I/C SN74651 38N	1101-0138
	Socket, I/C 14 Pin	2250-1014
	Socket, I/C 16 Pin	2250-1016
	Socket, I/C 24 Pin	2250-1024
	Conn 26 Pin M Header	2250-6512

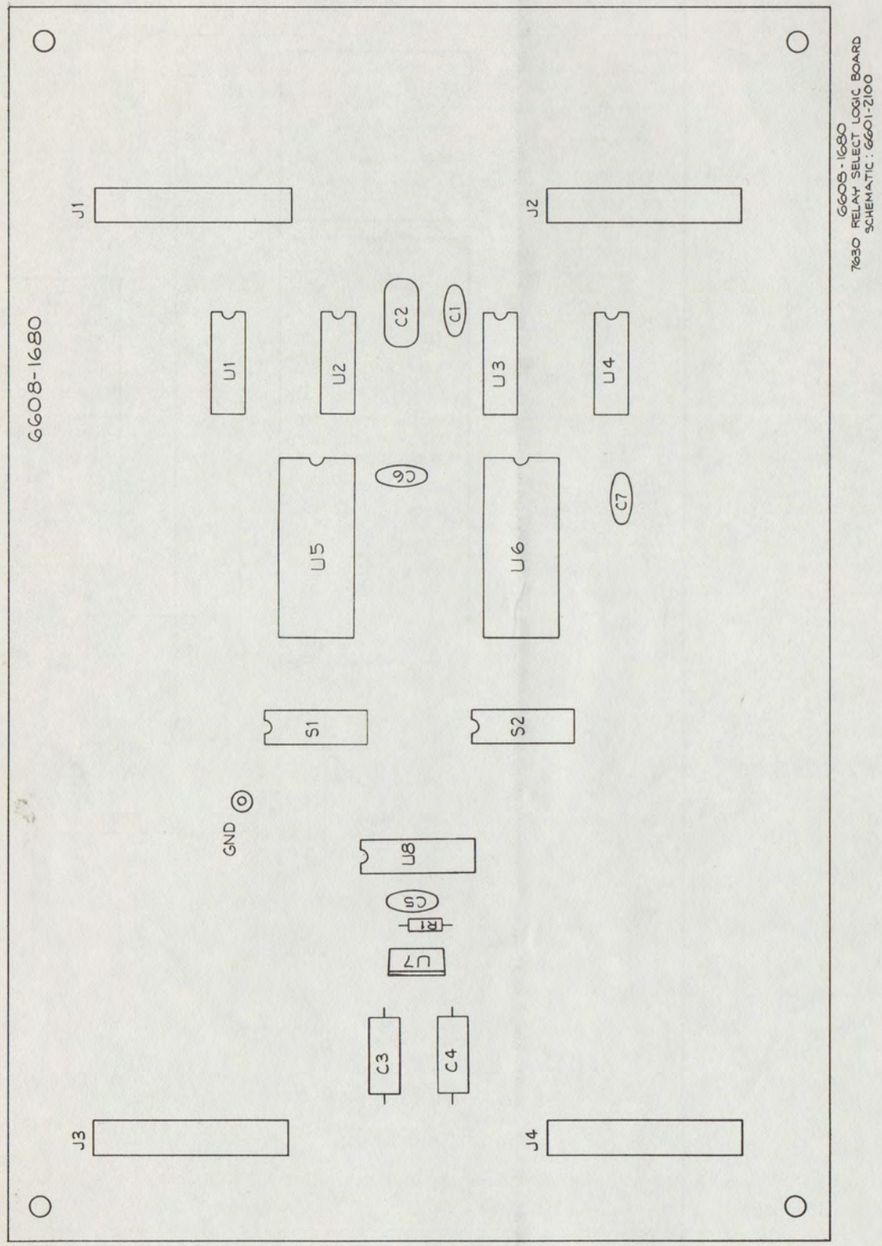

www.SteamPoweredRadio.Com

NEXT ASSY	USED ON
	7630

REVISIONS

SYM	DESCRIPTION	DR	CHK	AUTH	DATE
A1	RELEASED FOR PRODUCTION	TD			

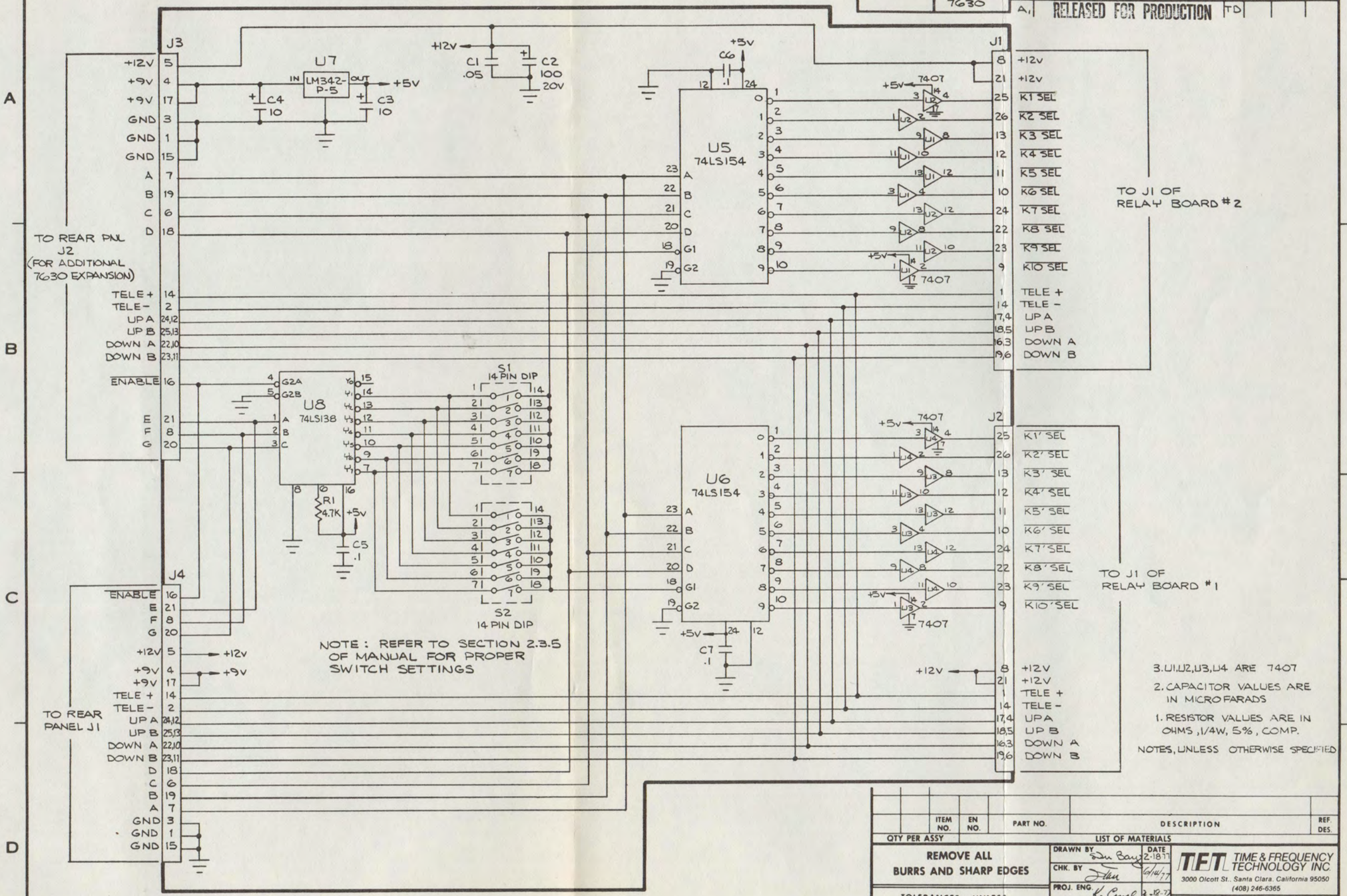

3. U1, U2, U3, U4 ARE 7407

2. CAPACITOR VALUES ARE IN MICROFARADS

1. RESISTOR VALUES ARE IN OHMS, 1/4W, 5%, COMP.

NOTES, UNLESS OTHERWISE SPECIFIED

QTY PER ASSY	ITEM NO.	EN NO.	PART NO.	DESCRIPTION	REF. DES.

LIST OF MATERIALS

REMOVE ALL BURRS AND SHARP EDGES

TOLERANCES UNLESS OTHERWISE SPECIFIED
.XX ±
.XXX ±
ANGULAR ±

DO NOT SCALE THIS PRINT

		DATE
DRAWN BY	Dan Bay	2-18-77
CHK. BY	Ellen	6/14/77
PROJ. ENG.	K. Engl	2-18-77
MFG. ENG.		
APPD.	DWE	6/17/77
APPD.		
ECO NO.		

TFT TIME & FREQUENCY TECHNOLOGY INC.
3000 Olcott St., Santa Clara, California 95050
(408) 246-6365

TITLE FIGURE 6-6-3
SCHEMATIC: 7630
RELAY SELECT LOGIC

SIZE C | DRAWING NO. 6601-2100 | REV. A1

SCALE ~ | SHT. 1 OF 1

DWG. NO.

If You Didn't Get This From My Site,
Then It Was Stolen From...
www.SteamPoweredRadio.Com